walraven

Know-how, Innovation,
System-thinking, Quality and Service



Walraven Catalogue

Electrical

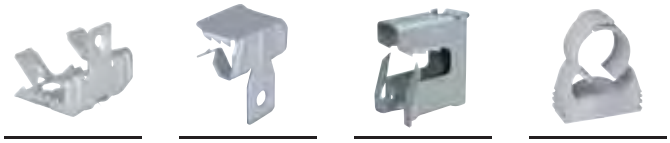

Table of Contents

	Introduction	1
A	BIS Metal Pipe Clamps with Lining	11
B	BIS Metal Pipe Clamps	41
C	BIS Plastic Pipe Clamps	75
E	BIS Fixing Points and Sliding Devices	103
F	BIS Suspension Components for Air Ducts	125
G	BIS RapidRail® Fixing System	129
H	BIS RapidStrut® Fixing System	201
H2	BIS Fixing System for Industrial Installations	298
I	BIS Rooftop + Solar Fixings	301
J	BIS Electrical Fixings	319
K	BIS Fixing Accessories	375
L	BIS Fastenings	469
M	BIS Stainless Steel Pipe Support Fixings	515
N	BIS Pipe Identification	584
O	BIS Under Floor / Radiator Brackets	588
O2	In-Wall and Overhead Solutions	592
P	BIS Split Band Clips, Gang Hangers, BIS Twinlok®	607
U	Fire Protection Systems	609
	Technical Information / Indexes	611

Walraven Group



Walraven

Walraven is a manufacturer of a wide range of technical installation materials, with an emphasis on fixing systems, fire protection systems and sanitary systems. Since its founding in 1942, the family business has grown into an international company with more than 1000 skilled employees and its own sales and production sites in various countries in Europe.

Our employees think in solutions and are happy to assist you with well grounded advice and technical support.
All this in close collaboration with specialised wholesale partners and distributors. Thanks to them Walraven products always close by and available at the right time in Europe, North and South America Middle East, Asia and Australia.

Head office

J. van Walraven Holding B.V.
Mijdrecht (NL)

19 Sales companies

Mijdrecht (NL)
Walraven B.V.
The Netherlands

Mijdrecht (NL)
Walraven International
Other countries

Tienen (BE)
Walraven BVBA
Belgium – Luxembourg

Bayreuth (DE)
Walraven GmbH
Germany – Austria – Switzerland
Italy – South East Europe

Grenoble (FR)
Walraven France Eurl
France

Banbury (UK)
Walraven Ltd.
United Kingdom – Ireland

Mladá Boleslav (CZ)
Walraven s.r.o.
Czech republic – Slovak republic

Kraków (PL)
Walraven Sp. z o.o.
Poland – Lithuania – Latvia
Estonia

Kyiv (UA)
Walraven Ltd.
Ukraine

Barcelona (ES)
Walraven Iberia S.L.
Spain – Portugal

Danville (US)
Walraven, Inc.
United States of America

Shanghai (CN)
Walraven Shanghai, Ltd.
China

Malmö (SE)
Walraven Nordic AB
Sweden – Denmark – Norway –
Finland – Iceland

Dubai (AE)
Hira Walraven
Middle East

Budapest (HU)
Walraven Kft.
Hungary – Romania

Mumbai (IN)
Diamond Walraven
India

Burlington (CA)
Taylor Walraven
Canada

Moscow (RU)
Walraven LLC
Russia

Singapore (SG)
Walraven Pte. Ltd.
Singapore – Indonesia – Malaysia
Thailand – Vietnam – Cambodia – Brunei



12 Production / assembly companies

Mijdrecht (NL) J. van Walraven B.V.	**Cista (CZ)** Suchánek & Walraven s.r.o.	**Horka (CZ)** Suchánek & Walraven s.r.o.	**Barcelona (ES)** Walraven Iberia S.L.	**Banbury (UK)** Walraven Ltd.	**Istanbul (TR)** Jefleks Plastik Kauçuk
Gramsbergen (NL) Loko Gramsbergen B.V.	**Horka (CZ)** SWO Tooling s.r.o.	**Changshu (CN)** Walraven Metal Products (Changshu) Co. Ltd	**Danville (US)** Walraven, Inc.	**Mumbai (IN)** Diamond Walraven	**Burlington (CA)** Taylor Walraven

Quality

Production

The Walraven Group has production facilities in various countries, with modern machines which are often designed in-house. Each production company has its own speciality so that products can be manufactured in the most efficient manner.

Almost all of our tooling and moulds are produced in our own tool making facility. Walraven then manages the entire process - from product development to manufacture - and can quickly respond to developments in the market.

Innovation

The development of new products is always our priority. With our primary focus being on customer satisfaction. Think of comfort, time-saving during assembly and the highest degree of reliability when operational. A large number of innovations and patents is the result. Our innovation is not just limited to product development. Also our marketing is pushing the boundaries.

We develop and produce customer-specific or project-related products too. In addition, many of our standard products can be supplied in a special size or with a special surface treatment.

Quality

Our organization is ISO 9001:2015 certificated. This way we continuously improve operational processes, and thus the quality of the entire organization.

Our products meet the highest quality standards and are approved by many international institutes, such as:

Our fire protection products meet the highest international quality standards and are approved by many European certification institutes.

Our frames have been tested for load capacity and corrosion resistance in accordance with European standards.



EN-SG 02/2022- Subject to modifications

RAL - Safe Connection

RAL-Quality hallmark

Walraven is one of the initiators of the 'Gütegemeinschaft Röhrbefestigung' (Safe Connection). The most important producers of pipe fixing systems have set up univocal product quality guidelines in this quality association.
The 'Gütegemeinschaft Rohrbefestigung' has become acknowledged in 2003 by the RAL, the German institute for quality guarantees.

Benefits

The technical properties of the products, like the maximum safe working load, are established and published by means of a standardised measuring method.
Within the measuring method the maximum allowed load is calculated, taking a maximum deflection into consideration.

With the RAL-mark the quality of the pipe fixing products, like clamps and fixing rails of the participating manufacturers becomes clear and are easily comparable.

Currently four measuring methods for the load capacity of pipe fixing products under normal temperatures have been published:

- pipe clamps (RAL-GZ 655/B)
- fixing rail (RAL-GZ 655/C)
- rail accessoires (RAL-GZ 655/D)
- cantilever arms (RAL-GZ 655/E)

Also one measuring method for the load capacity of pipe clamps during fire:

- pipe clamps (RAL-GZ 656)

The maximum safe working loads which are mentioned in the tables are based on:

1) A Walraven developed measuring method;
2) The measuring method prescribed in the testing prescriptions RAL-GZ 655 and RAL-GZ 656, which is set up by the 'Gütegemeinschaft Rohrbefestigung'. If the product is provided with the 'RAL-Gütezeichen', the test results are checked by an independent testing institute.

The 'RAL-Gütezeichen' is exclusively given to products which satisfy high quality standards and is an evidence of quality. This gives the users of pipe fixings certainty and trust!

Certified products are recognisable by:

RAL GÜTEZEICHEN ROHRBEFESTIGUNG

RAL GÜTEZEICHEN BRANDGEPRÜFTE ROHRBEFESTIGUNG



RAL-GZ 655 and 656 Certified Products

		Part No.	Connection nut	Catalogue page	Dimension (mm)	RAL-GZ 655/B Cert. No.	Dimension (mm)	RAL-GZ 656 Cert. No.
	**BISMAT® Flash** Zinc plated	337 3 XXX	M8	A 05 04	15 - 63	2010-23	15 - 63	2011-09
		337 4 XXX	M8/10	A 05 04	15 - 63	2010-23	15 - 63	2011-09
		-	-	-	-	-	-	-
	**BISMAT® 2000 'S'** Zinc plated	341 4 0XX	M8	A 05 32	15 - 63	2005-08	15 - 63	2011-11
		340 4 0XX	M8/10	A 05 32	15 - 63	2005-08	15 - 63	2011-11
		-	-	-	-	-	-	-
	**BISMAT® 2000** Zinc plated	341 3 0XX	M8	A 05 16	15 - 63	2010-22	15 - 63	2011-10
		340 3 XXX	M8/10	A 05 16	15 - 63	2010-22	15 - 63	2011-10
		340 3 XXX	M8/10	A 05 24	57 - 141	2005-08	57 - 114	2011-10
	**BIS HD1501** BIS UltraProtect® 1000	3313 8 0XX	M8/10	A 10 04	15 - 64	2011-12a	15 - 64	2011-14
		3314 8 XXX	M10/12	A 10 04	65 - 227	2011-12a	65 - 227	2011-14
		3316 8 XXX	M16	A 10 06	159 - 509	2011-12a	159 - 227	2011-14
		3317 8 XXX	G½"	A 10 09	15 - 509	2011-12a	15 - 227	2011-14
	**BISMAT® 5000** Zinc plated	348 3 0XX	M8	A 25 05	16 - 50	2010-24	-	-
		-	-	-	-	-	-	-
		-	-	-	-	-	-	-
	**BIS HD500** BIS UltraProtect® 1000	3303 8 0XX	M8/10	B 10 04	15 - 71	2011-13a	15 - 71	2011-05
		3304 8 XXX	M10/12	B 10 04	72 - 227	2011-13a	72 - 227	2011-05
		3306 8 XXX	M16	B 10 06	159 - 509	2011-13a	-	-
		3307 8 XXX	G½"	B 10 09	15 - 509	2011-13a	15 - 227	2011-05
	**BIS Bifix® 300 SSt.** Stainless Steel	301 7 XXX	M8	M 10 05	72 - 118	2004-09	-	-
		302 7 XXX	M10	M 10 05	62 - 219	2004-09	-	-
		-	-	-	-	-	-	-

For the max. allowed load (Fa,z) per part number and RAL-certificate we refer to the product page or our webcatalogue on www.walraven.com.

EN-SG 02/2022- Subject to modifications

		Part No.	Dimension (mm)	For Rail	Catalogue page	RAL-GZ Cert. No.	
	**BIS RapidRail® Fixing Rail** Pre-galvanized	650 5 X00	WM0 (27 x 18 x 1.20)	-	G 04 05	655/C	2012-03
		650 5 X01	WM1 (30 x 15 x 2.00)	-	G 04 05	655/C	2012-03
		650 5 51X	WM1 (30 x 15 x 2.00)	-	G 04 05	655/C	2012-03
		650 5 X15	WM15 (30 x 20 x 1.75)	-	G 04 05	655/C	2012-03
		650 5 X02	WM2 (30 x 30 x 2.00)	-	G 04 05	655/C	2012-03
		650 5 X30	WM30 (30 x 45 x 2.00)	-	G 04 05	655/C	2012-03
	**BIS RapidStrut® Fixing Rail** Pre-galvanized	650 5 X24	41 x 21 x 1.5	-	H 04 10	655/C	2012-04
		650 5 X22	41 x 21 x 2.0	-	H 04 10	655/C	2012-04
		650 5 X25	41 x 21 x 2.5	-	H 04 10	655/C	2012-04
		650 5 X44	41 x 41 x 1.5	-	H 04 10	655/C	2012-04
		650 5 X42	41 x 41 x 2.0	-	H 04 10	655/C	2012-04
		650 5 X45	41 x 41 x 2.5	-	H 04 10	655/C	2012-04
	**BIS RapidStrut® Fixing Rail** BIS UltraProtect® 1000	6501 8 X27	41 x 21 x 2.5	-	H 04 13	655/C	2015-02
		6501 8 X42	41 x 41 x 2.0	-	H 04 13	655/C	2015-02
		6501 8 X47	41 x 41 x 2.5	-	H 04 13	655/C	2015-02
	**BIS RapidRail® Stainless Steel Fixing Rail** Stainless steel	650 7 002	WM2 (30 x 30 x 2.0)	-	M 20 05	655/C	2012-07
		-	-	-	-	-	-
		-	-	-	-	-	-
	**BIS RapidRail® Ball Swivel Hangers** Zinc plated	652 0 X00	M8	WM1, 2, 15, 30	G 30 60	655/D	2012-11
		652 0 X10	M10	WM1, 2, 15, 30	G 30 60	655/D	2012-11
		-	-	-	-	-	-
	**BIS RapidRail® Connector** Zinc plated	654 3 001	200 mm	WM1, 2, 15, 30	G 35 35	655/D	2012-08
		-	-	-	-	-	-
		-	-	-	-	-	-
	**BIS RapidRail® T-Connector** Zinc plated	658 4 090	-	WM1, 2, 15, 30	G 35 45	655/D	2012-08
		-	-	-	-	-	-
		-	-	-	-	-	-
	**BIS RapidRail® X-Connector** Zinc plated	658 4 091	-	WM1, 2, 15, 30	G 35 45	655/D	2012-08
		-	-	-	-	-	-
		-	-	-	-	-	-
	**BIS RapidRail® Connectors 90°** Zinc plated	658 4 00X	WM0 - 35	WM1, 2, 15, 30	G 35 05	655/D	2012-09
		658 4 011	WM0 - 35	WM1, 2, 15, 30	G 35 05	655/D	2012-09
		-	-		-	-	-
	**BIS RapidRail® Connectors 135°** Zinc plated	658 4 05X	WM0 - 35	WM1, 2, 15, 30	G 35 10	655/D	2012-09
		-	-		-	-	-
	**BIS RapidRail® Cross Connectors** Zinc plated	658 4 150	27 x 18	WM0, 1, 15	G 35 50	655/D	2012-10
		658 4 151	30 x 15	WM0, 1, 15	G 35 50	655/D	2012-10
		658 4 152	30 x 20	WM0, 1, 15	G 35 50	655/D	2012-10
	**BIS RapidRail® Rail Suspension Bracket** Zinc plated	679 3 008	M8	WM1, 2, 15, 30	G 20 40	655/D	2012-09
		-	-	-	-	-	-
		-	-	-	-	-	-

RAL-GZ 655/C: for the max. allowed load (Fa,z) per part number and RAL-certificate we refer to the product page, the loading tables or our webcatalogue on www.walraven.com

RAL-GZ 655/D: for the max. allowed load (Fa,z) per part number and RAL-certificate we refer to the product page or our webcatalogue on www.walraven.com

Introducing Walraven
for smart installation solutions

Walraven has been in the M&E fixings business for 75 years. Our products are known for their quality and are considered by our customers to be innovative and market leading. Our products are designed to work together to offer total system solutions to installers.

Pipe Clamps
starQuick®, BIS Bifix®
and BIS Heavy Duty Clamps





Rail
BIS RapidRail®, BIS RapidStrut®
and Maxx Rail





Rooftop Supports
BIS Yeti® 480, BIS Yeti® 335
and BIS Ursus®





Fixing Accessories
Rail Accessories,
Light and Heavy Duty Anchors





Britclips®
Beam Clips, Cable Run Clips
and Conduit Clips





Fire Protection
Pacifyre® MK II, Pacifyre® EFC and
Pacifyre® A and S

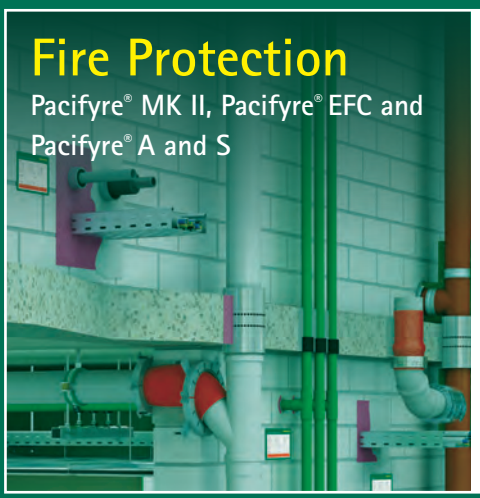



To find out more, visit walraven.com

Explanation Max. Allowed Load

Maximum allowed load:

From most of our products a maximum allowed load is included in the article tables. Stated values are determined by:

- a by Walraven developed measuring method
- the measuring method described in the testing prescriptions RAL-GZ 655, which is set up by the 'Gütegemeinschaft Rohrbefestigung'. If the product is provided with the 'RAL-Gütezeichen', the test results are checked by an independent testing institute.

For plastic clamps the breaking load is included.

Force directions (F) x, y and z (at 20 °C)

Fa = maximum allowed load
Fb = breaking load

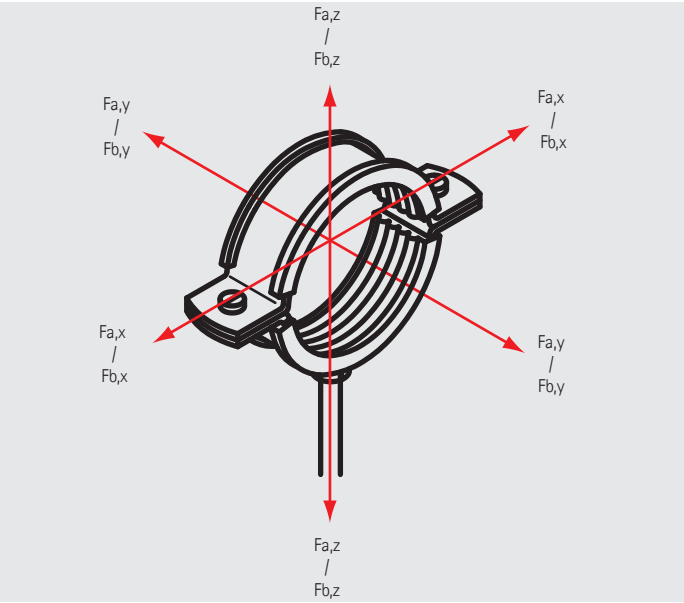

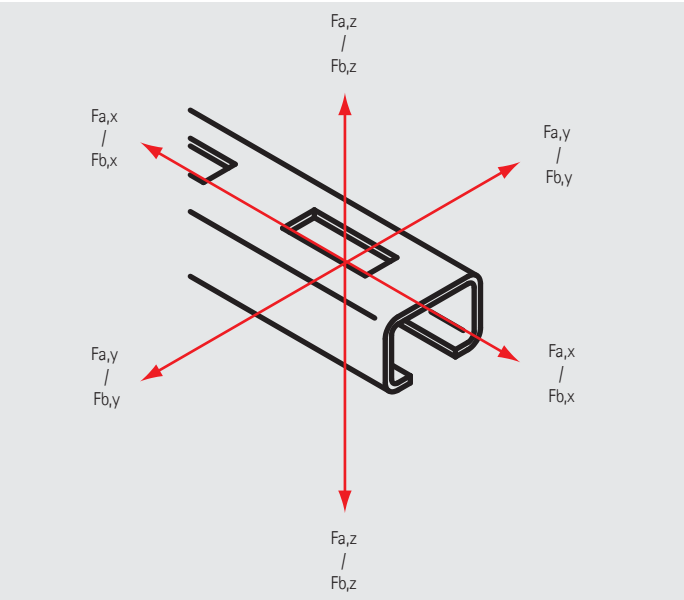

Force directions Anchoring

V Rks = Characteristic resistance value in non cracked or cracked concrete (kN) shear load with standard embedment depth
N Rks = Characteristic resistance value in non cracked or cracked concrete (kN) tension load with standard embedment depth

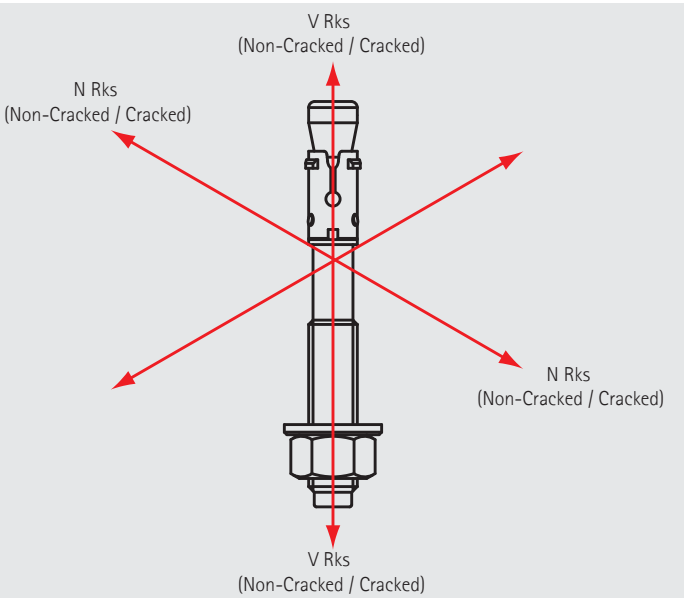

BIS UltraProtect® 1000

Support system for indoor and outdoor use

Corrosion resistance

- C1 - C4 / ISO 12944-2

Salt spray test

- 1000 hours / ISO 9227*

Complementary system

- Perfectly combines with other products



** Until the occurrence of maximum 5% red rust.*

BISMAT® Flash

(A 05 04)

for metal pipes 15 - 63 mm

M8 - M8/10



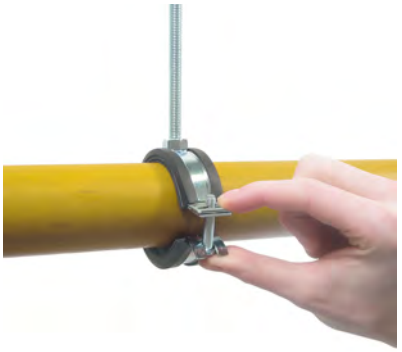

Features and Benefits

- single screw clamp
- with BISMAT® Flash quick locking system
- clamp easy to close with one hand
- the locking screw can be secured without use of tools
- material: steel
- zinc plated
- noise insulating lining, EPDM rubber, black
- age resistant lining
- sound insulating lining according DIN 4109
- optimised noise insulation due to soft closing without tools
- noise reduction according to ISO 3822-1 up to 23 dB(A)
- tested for fire safety

RAL GÜTEZEICHEN ROHRBEFESTIGUNG
RAL-GZ 655/B
Cert.Nr. 2010-23

RAL GÜTEZEICHEN BRANDGEPRÜFTE ROHRBEFESTIGUNG
RAL-GZ 656
Cert.Nr. 2011-09

Part No.	D (mm)	D (")	DN	G	B (mm)	H (mm)	h (mm)	b x s (mm)	cs	$F_{a,z}$ (N)	RAL	Pack 1
3373018	15 - 18	3/8	10	M8	49	38	22	20 x 1.00	M6	500	RAL[2]	50
3373023	20 - 23	1/2	15	M8	54	39	23	20 x 1.00	M6	500	RAL[2]	50
3373028	25 - 28	3/4	20	M8	59	44	26	20 x 1.00	M6	500	RAL[2]	50
3373035	32 - 35	1	25	M8	65	51	30	20 x 1.00	M6	500	RAL[2]	50
3373043	40 - 43	1 1/4	32	M8	74	60	34	20 x 1.25	M6	700	RAL[2]	50
3373051	48 - 51	1 1/2	40	M8	82	66	37	20 x 1.25	M6	700	RAL[2]	50
3373056	53 - 56	-	-	M8	85	76	42	20 x 1.25	M6	700	RAL[2]	50
3373063	57 - 63	2	50	M8	91	82	45	20 x 1.25	M6	700	RAL[2]	50
3374018	15 - 18	3/8	10	M8/10	49	44	30	20 x 1.00	M6	500	RAL[2]	50
3374023	20 - 23	1/2	15	M8/10	54	47	31	20 x 1.00	M6	500	RAL[2]	50
3374028	25 - 28	3/4	20	M8/10	59	52	34	20 x 1.00	M6	500	RAL[2]	50
3374035	32 - 35	1	25	M8/10	65	59	38	20 x 1.00	M6	500	RAL[2]	50
3374043	40 - 43	1 1/4	32	M8/10	74	68	42	20 x 1.25	M6	700	RAL[2]	50
3374051	48 - 51	1 1/2	40	M8/10	82	74	45	20 x 1.25	M6	700	RAL[2]	50
3374056	53 - 56	-	-	M8/10	85	84	50	20 x 1.25	M6	700	RAL[2]	50
3374063	57 - 63	2	50	M8/10	91	90	53	20 x 1.25	M6	700	RAL[2]	50

RAL[2] = tested, certified and monitored by a third party according to RAL-GZ 655/B and RAL-GZ 656. For detailed technical information about our RAL marked products, please see the RAL datasheet in our web catalogue.

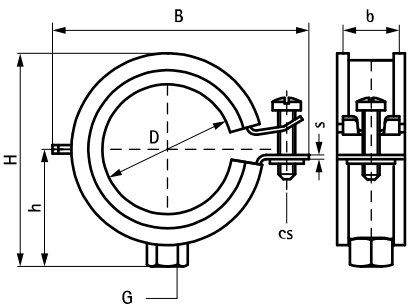

Complementary

129 BIS RapidRail® Fixing System
375 BIS Fixing Accessories
469 BIS Fastenings

EN-SG 02/2022- Subject to modifications

BISMAT® 2000

(A 05 16)

for metal pipes 11 - 63 mm

M8 - M8/10



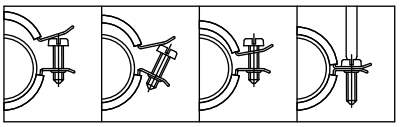

Features and Benefits

- single screw clamp
- with BISMAT® quick locking system
- clamp easy to close with one hand
- material: steel
- zinc plated
- noise insulating lining, EPDM rubber, black
- age resistant lining
- sound insulating lining according DIN 4109
- noise reduction according to ISO 3822-1 up to 23 dB(A)
- tested for fire safety

RAL-GZ 655/B
Cert.Nr. 2010-22

RAL-GZ 656
Cert.Nr. 2011-10a

Part No.	D (mm)	D (")	DN	G	B (mm)	H (mm)	h (mm)	b x s (mm)	cs	$F_{a,z}$ (N)	RAL	Pack 1
3413014	11 - 14	1/4	8	M8	48	32	20	20 x 1.00	M6	600	-	50
3413018	15 - 18	3/8	10	M8	48	36	22	20 x 1.00	M6	600	RAL[2]	50
3413023	20 - 23	1/2	15	M8	55	39	23	20 x 1.00	M6	600	RAL[2]	50
3413028	25 - 28	3/4	20	M8	60	44	26	20 x 1.00	M6	600	RAL[2]	50
3413035	31 - 35	1	25	M8	67	51	30	20 x 1.00	M6	600	RAL[2]	50
3413039	36 - 39	-	-	M8	75	56	32	20 x 1.25	M6	600	-	50
3413043	40 - 43	1 1/4	32	M8	75	60	34	20 x 1.25	M6	800	RAL[2]	50
3413045	44 - 45	-	-	M8	85	63	35	20 x 1.25	M6	800	-	50
3413053	48 - 51	1 1/2	40	M8	85	66	37	20 x 1.25	M6	800	RAL[2]	50
3413054	53 - 56	-	-	M8	89	72	40	20 x 1.25	M6	800	RAL[2]	50
3413063	57 - 63	2	50	M8	94	78	43	20 x 1.25	M6	800	RAL[2]	50
3403018	15 - 18	3/8	10	M8/10	48	44	30	20 x 1.00	M6	600	RAL[2]	50
3403023	20 - 23	1/2	15	M8/10	55	47	31	20 x 1.00	M6	600	RAL[2]	50
3403028	25 - 28	3/4	20	M8/10	60	52	34	20 x 1.00	M6	600	RAL[2]	50
3403035	31 - 35	1	25	M8/10	67	59	38	20 x 1.00	M6	600	RAL[2]	50
3403043	40 - 43	1 1/4	32	M8/10	75	68	42	20 x 1.25	M6	800	RAL[2]	50
3403053	48 - 51	1 1/2	40	M8/10	85	74	45	20 x 1.25	M6	800	RAL[2]	50
3403054	53 - 56	-	-	M8/10	89	80	48	20 x 1.25	M6	800	RAL[2]	50
3403063	57 - 63	2	50	M8/10	94	86	51	20 x 1.25	M6	800	RAL[2]	50

RAL[2] = tested, certified and monitored by a third party according to RAL-GZ 655/B and RAL-GZ 656. For detailed technical information about our RAL marked products, please see the RAL datasheet in our web catalogue.

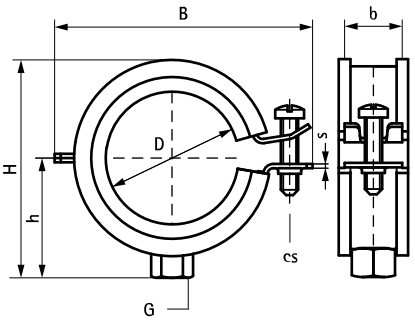

Complementary

129 BIS RapidRail® Fixing System
375 BIS Fixing Accessories
469 BIS Fastenings

Alternative

11 BISMAT® Flash

EN-SG 02/2022- Subject to modifications

BISMAT® 2000

(A 05 24)

for metal pipes 57 - 219 mm

M8/10 - M10



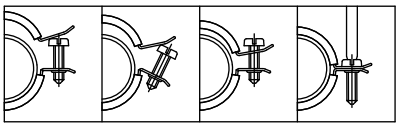

Features and Benefits

- two-screw clamp
- with BISMAT® quick locking system
- from Ø 159 mm: with quick locking system
- material: steel
- zinc plated
- noise insulating lining, EPDM rubber, black
- age resistant lining
- sound insulating lining according DIN 4109
- noise reduction according to ISO 3822-1 up to 23 dB(A)
- tested for fire safety

RAL GÜTEZEICHEN ROHRBEFESTIGUNG
RAL-GZ 655/B
Cert.Nr. 2005-08

RAL GÜTEZEICHEN BRANDGEPRÜFTE ROHRBEFESTIGUNG
RAL-GZ 656
Cert.Nr. 2011-10a

Part No.	D (mm)	D (")	DN	G	B (mm)	H (mm)	h (mm)	b x s (mm)	cs	$F_{a,z}$ (N)	RAL	Pack 1
3403064	57 - 64	2	50	M8/10	107	90	52	23 x 2.00	M6	520	RAL[2]	50
3403070	64 - 70	-	-	M8/10	115	99	56	23 x 2.00	M6	520	RAL[2]	50
3403080	73 - 80	2½	65	M8/10	126	109	61	23 x 2.00	M6	520	RAL[2]	50
3403091	83 - 91	3	80	M8/10	137	121	67	25 x 2.50	M6	935	RAL[2]	25
3403105	100 - 105	-	-	M8/10	152	135	74	25 x 2.50	M6	935	RAL[2]	25
3403114	108 - 114	4	100	M8/10	160	144	79	25 x 2.50	M6	935	RAL[2]	25
3403119	116 - 119	-	-	M8/10	165	149	81	25 x 2.50	M6	935	RAL[1]	25
3403125	122 - 125	-	-	M8/10	173	157	85	25 x 2.50	M6	935	RAL[1]	25
3403141	133 - 141	5	125	M8/10	189	170	92	25 x 2.50	M6	935	RAL[1]	25
3423168	159 - 168	6	150	M10	233	198	102	25 x 3.00	M8	1,220	-	10
3423210	200 - 210	-	-	M10	273	239	122	25 x 3.00	M8	1,220	-	10
3423219	210 - 219	8	200	M10	284	250	128	25 x 3.00	M8	1,220	-	10

RAL[1] = tested, certified and monitored by a third party according to RAL-GZ 655/B.
RAL[2] = tested, certified and monitored by a third party according to RAL-GZ 655/B and RAL-GZ 656.
From Ø 159 mm: with quick locking system.
For detailed technical information about our RAL marked products, please see the RAL datasheet in our web catalogue.

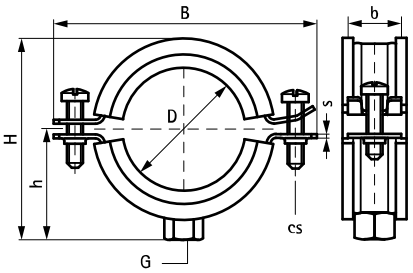

Complementary

129 BIS RapidRail® Fixing System
375 BIS Fixing Accessories
469 BIS Fastenings

walraven

BISMAT® 2000 'S'

(A 05 32)

for steam pipes 15 - 63 mm

M8/10



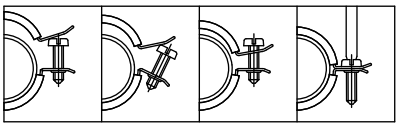

Features and Benefits

- single screw clamp
- with BISMAT® quick locking system
- clamp easy to close with one hand
- material: steel
- zinc plated
- noise insulating lining of silicone rubber, reddish brown, heat resistant up to 200 °C
- age resistant lining
- sound insulating lining according DIN 4109
- tested for fire safety

RAL-GZ 655/B
Cert.Nr. 2010-22

RAL-GZ 656
Cert.Nr. 2011-11

Part No.	D (mm)	D (")	DN	G	B (mm)	H (mm)	h (mm)	b x s (mm)	cs	$F_{a,z}$ (N)	RAL	Pack 1
3404018	15 - 18	3/8	10	M8/10	48	44.0	30	20 x 1.00	M6	600	RAL[2]	50
3404023	20 - 23	1/2	15	M8/10	55	47.0	31	20 x 1.00	M6	600	RAL[2]	50
3404028	25 - 28	3/4	20	M8/10	60	52.0	34	20 x 1.00	M6	600	RAL[2]	50
3404035	31 - 35	1	25	M8/10	67	59.0	38	20 x 1.00	M6	600	RAL[2]	50
3404043	40 - 43	1 1/4	32	M8/10	75	68.0	42	20 x 1.25	M6	800	RAL[2]	50
3404053	48 - 53	1 1/2	40	M8/10	85	74.0	45	20 x 1.25	M6	800	RAL[2]	50
3404063	57 - 63	2	50	M8/10	94	86.0	51	20 x 1.25	M6	800	RAL[2]	50

RAL[2] = tested, certified and monitored by a third party according to RAL-GZ 655/B and RAL-GZ 656. For detailed technical information about our RAL marked products, please see the RAL datasheet in our web catalogue.

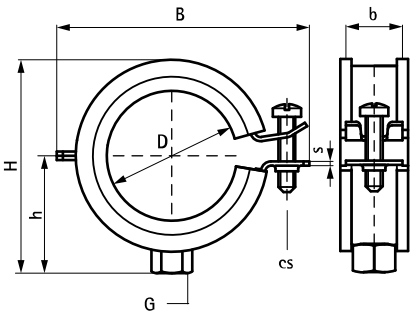

Complementary

129 BIS RapidRail® Fixing System
375 BIS Fixing Accessories
469 BIS Fastenings

EN-SG 02/2022- Subject to modifications

BISMAT® 2000 'S'

(A 05 36)

for steam pipes 73 - 168 mm

M8/10



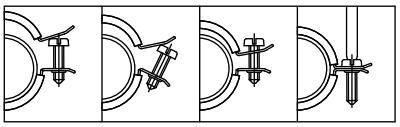

Features and Benefits

- two-screw clamp
- with BISMAT® quick locking system
- clamp easy to close with one hand
- from Ø 159 mm: with quick locking system
- material: steel
- zinc plated
- noise insulating lining of silicone rubber, reddish brown, heat resistant up to 200 °C
- age resistant lining
- sound insulating lining according DIN 4109
- tested for fire safety

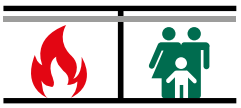

Part No.	D (mm)	D (")	DN	G	B (mm)	H (mm)	h (mm)	b x s (mm)	$F_{a,z}$ (N)	Pack 1
3404080	73 - 80	2½	65	M8/10	126	109	61	23 x 2.00	930	50
3404091	83 - 91	3	80	M8/10	137	121	67	25 x 2.50	930	25
3404114	108 - 114	4	100	M8/10	160	141	79	25 x 2.50	930	25
3404141	133 - 141	5	125	M8/10	189	170	92	25 x 2.50	930	25
3404168	159 - 168	6	150	M8/10	233	198	99	25 x 3.00	1,500	10

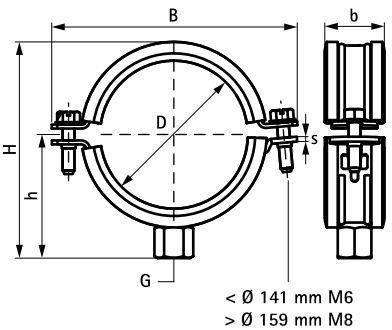

Complementary

129 BIS RapidRail® Fixing System
375 BIS Fixing Accessories

Bifix® G2 with Lining (M8) (BUP1000)

(A 05 44)

for steel, copper, cast iron and plastic (multilayer) pipe 10 - 83 mm

M8



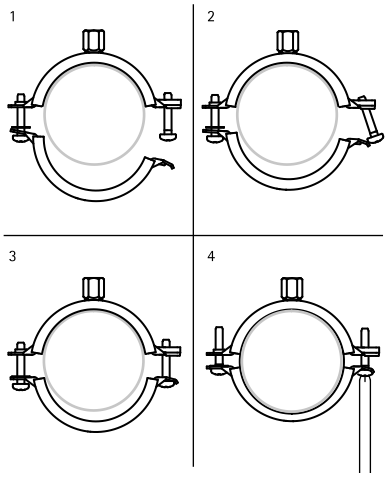

Features and Benefits

- two-screw clamp
- quick closing mechanism for easy locking of the clamp with one hand
- 2 component rubber lining provides easy positioning of the pipe during installation
- when the clamp is closed, the pipe rests on soft black rubber lining for increased noise reduction
- suitable for steel, copper, cast iron and plastic (multilayer) pipe
- material: steel
- surface protection:
  - product is part of the BIS UltraProtect® 1000 system
  - suitable for in- and outdoor applications
  - stands min. 1,000 hours salt spray test (max. 5% red rust) according to ISO 9227
- temperature resistance from -30 °C to +120 °C
- sound insulating lining according DIN 4109
- noise reduction according to ISO 3822-1 up to 23 dB(A)

PLUS X AWARD
2019 achieved for:
High Quality
Ease of Use
Functionality
www.plusxaward.com

Part No.	D (mm)	D (")	DN	G	B (mm)	H (mm)	h (mm)	b x s (mm)	cs	$F_{a,z}$ (N)	Pack 1
31185014	10 - 14	¼	8	M8	59	34	21	20 x 1.25	M6	700	50
31185019	15 - 19	⅜	10	M8	63	38	23	20 x 1.25	M6	700	50
31185023	20 - 23	½	15	M8	68	43	25	20 x 1.25	M6	700	50
31185028	25 - 28	¾	20	M8	74	49	28	20 x 1.25	M6	700	50
31185035	31 - 35	1	25	M8	80	55	31	20 x 1.25	M6	700	50
31185039	36 - 39	-	-	M8	84	59	33	20 x 1.25	M6	700	50
31185045	40 - 45	1¼	32	M8	91	66	37	20 x 1.25	M6	700	50
31185052	48 - 52	1½	40	M8	97	72	40	20 x 1.25	M6	700	50
31185058	54 - 58	-	-	M8	104	79	33	20 x 1.25	M6	700	50
31185064	60 - 64	2	50	M8	109	84	46	20 x 1.25	M6	700	50
31185070	66 - 70	-	-	M8	118	92	50	20 x 1.50	M6	800	50
31185079	75 - 79	2½	65	M8	125	100	54	20 x 1.50	M6	800	50
31185083	80 - 83	-	-	M8	131	106	57	20 x 1.50	M6	800	50

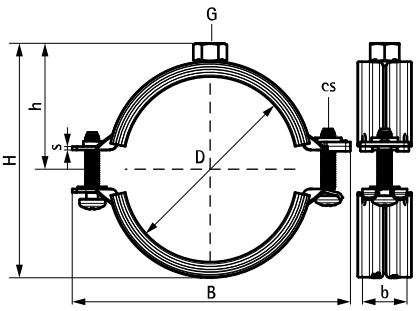

EN-SG 02/2022- Subject to modifications

Bifix® G2 with Lining (M8/10) (BUP1000)

(A 05 52)

for steel, copper, cast iron and plastic (multilayer) pipe 10 - 169 mm

M8/10



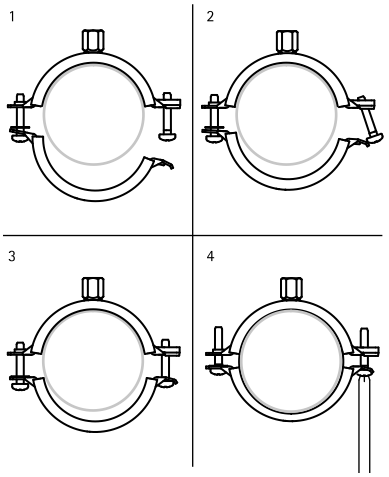

Features and Benefits

- two-screw clamp
- quick closing mechanism for easy locking of the clamp with one hand
- 2 component rubber lining provides easy positioning of the pipe during installation
- when the clamp is closed, the pipe rests on soft black rubber lining for increased noise reduction
- material: steel
- surface protection:
  - product is part of the BIS UltraProtect® 1000 system
  - suitable for in- and outdoor applications
  - stands min. 1,000 hours salt spray test (max. 5% red rust) according to ISO 9227
- temperature resistance from -30 °C to +120 °C
- sound insulating lining according DIN 4109
- noise reduction according to ISO 3822-1 up to 23 dB(A)



Part No.	D (mm)	D (")	DN	G	B (mm)	H (mm)	h (mm)	b x s (mm)	cs	$F_{a,z}$ (N)	Pack 1
31085014	10 - 14	¼	8	M8/10	59	42	30	20 x 1.25	M6	700	50
31085019	15 - 19	⅜	10	M8/10	63	46	31	20 x 1.25	M6	700	50
31085023	20 - 23	½	15	M8/10	68	51	33	20 x 1.25	M6	700	50
31085028	25 - 28	¾	20	M8/10	74	57	36	20 x 1.25	M6	700	50
31085035	31 - 35	1	25	M8/10	80	63	39	20 x 1.25	M6	700	50
31085039	36 - 39	-	-	M8/10	84	67	41	20 x 1.25	M6	700	50
31085045	40 - 45	1¼	32	M8/10	91	74	45	20 x 1.25	M6	700	50
31085052	48 - 52	1½	40	M8/10	97	80	48	20 x 1.25	M6	700	50
31085058	54 - 58	-	-	M8/10	104	87	51	20 x 1.25	M6	700	50
31085064	60 - 64	2	50	M8/10	109	92	54	20 x 1.25	M6	700	50
31085070	66 - 70	-	-	M8/10	118	100	58	20 x 1.50	M6	800	50
31085079	75 - 79	2½	65	M8/10	125	108	62	20 x 1.50	M6	800	50
31085083	80 - 83	-	-	M8/10	131	114	65	20 x 1.50	M6	800	50
31085091	88 - 91	3	80	M8/10	142	123	70	23 x 2.00	M6	1,700	25
31085097	92 - 97	-	-	M8/10	147	132	73	23 x 2.00	M6	1,700	25
31085105	100 - 105	-	-	M8/10	155	137	77	23 x 2.00	M6	1,700	25
31085115	108 - 115	4	100	M8/10	163	145	81	23 x 2.00	M6	1,700	25
31085130	125 - 130	-	-	M8/10	180	162	89	23 x 2.00	M6	1,700	25
31085140	133 - 140	5	125	M8/10	189	171	94	23 x 2.00	M6	1,700	25
31085160	152 - 160	-	-	M8/10	208	190	102	23 x 2.00	M6	1,700	25
31085169	165 - 169	6	150	M8/10	225	203	111	25 x 2.50	M8	2,000	10

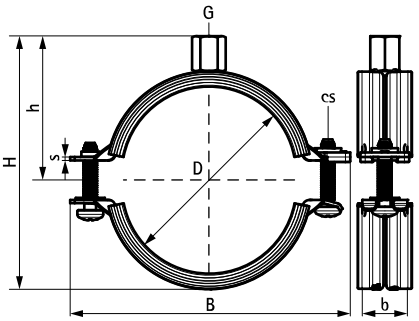

Bifix® G2 with Lining (M10) (BUP1000)

(A 05 72)

for steel, copper, cast iron and plastic (multilayer) pipe 10 - 225 mm

M10



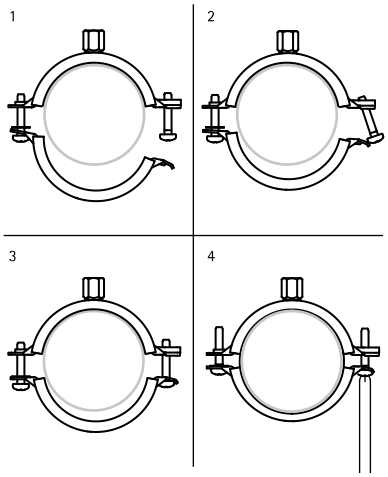

Features and Benefits

- two-screw clamp
- quick closing mechanism for easy locking of the clamp with one hand
- 2 component rubber lining provides easy positioning of the pipe during installation
- when the clamp is closed, the pipe rests on soft black rubber lining for increased noise reduction
- suitable for steel, copper, cast iron and plastic (multilayer) pipe
- material: steel
- surface protection:
  - product is part of the BIS UltraProtect® 1000 system
  - suitable for in- and outdoor applications
  - stands min. 1,000 hours salt spray test (max. 5% red rust) according to ISO 9227
- temperature resistance from -30 °C to +120 °C
- sound insulating lining according DIN 4109
- noise reduction according to ISO 3822-1 up to 23 dB(A)

PLUS X AWARD
2019 achieved for:
High Quality
Ease of Use
Functionality
www.plusxaward.com

Part No.	D (mm)	D (")	DN	G	B (mm)	H (mm)	h (mm)	b x s (mm)	cs	$F_{a,z}$ (N)	Pack 1
31285014	10 - 14	¼	8	M10	59	34	21	20 x 1.25	M6	800	50
31285019	15 - 19	⅜	10	M10	63	38	23	20 x 1.25	M6	800	50
31285023	20 - 23	½	15	M10	68	43	25	20 x 1.25	M6	800	50
31285028	25 - 28	¾	20	M10	74	49	28	20 x 1.25	M6	800	50
31285035	31 - 35	1	25	M10	80	55	31	20 x 1.25	M6	800	50
31285039	36 - 39	-	-	M10	84	59	33	20 x 1.25	M6	800	50
31285045	40 - 45	1¼	32	M10	91	66	37	20 x 1.25	M6	800	50
31285052	48 - 52	1½	40	M10	97	72	40	20 x 1.25	M6	800	50
31285058	54 - 58	-	-	M10	104	79	43	20 x 1.25	M6	800	50
31285064	60 - 64	2	50	M10	109	84	46	20 x 1.25	M6	800	50
31285070	66 - 70	-	-	M10	118	92	52	20 x 1.50	M6	1,000	50
31285079	75 - 79	2½	65	M10	125	100	56	20 x 1.50	M6	1,000	50
31285083	80 - 83	-	-	M10	131	106	59	20 x 1.50	M6	1,000	50
31285091	88 - 91	3	80	M10	142	115	64	23 x 2.00	M6	1,800	25
31285097	92 - 98	-	-	M10	147	123	73	23 x 2.00	M6	1,800	25
31285105	100 - 105	-	-	M10	155	129	71	23 x 2.00	M6	1,800	25
31285115	108 - 115	4	100	M10	163	137	75	23 x 2.00	M6	1,800	25
31285130	125 - 130	-	-	M10	180	154	83	23 x 2.00	M6	1,800	25
31285140	133 - 140	5	125	M10	189	163	88	23 x 2.00	M6	1,800	25
31285160	152 - 160	-	-	M10	208	182	97	23 x 2.00	M6	1,800	25
31285169	165 - 169	6	150	M10	225	195	103	25 x 2.50	M8	2,500	10
31285180	176 - 180	-	-	M10	238	201	109	25 x 2.50	M8	2,500	15
31285200	192 - 200	-	-	M10	257	230	119	25 x 2.50	M8	2,500	15
31285210	205 - 210	-	-	M10	269	241	125	25 x 2.50	M8	2,500	10
31285225	219 - 225	8	200	M10	283	257	132	25 x 2.50	M8	2,500	10

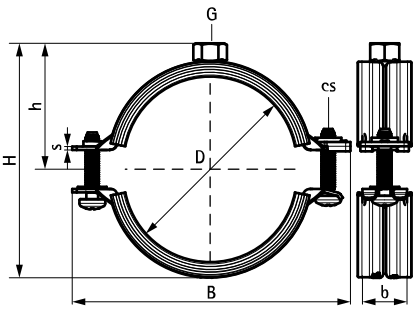

EN-SG 02/2022- Subject to modifications

BIS KSB1 Clamp

(A 05 108)

for metal pipes 13 - 63 mm

M8 - M8/10



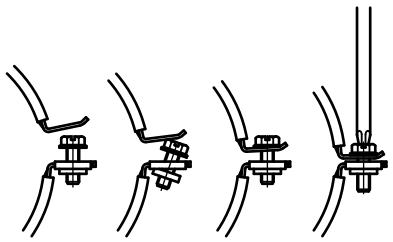

Features and Benefits

- single screw clamp
- with quick locking system, type KSB
- clamp easy to close with one hand
- material: steel
- zinc plated
- noise insulating lining, EPDM rubber, black
- age resistant lining
- sound insulating lining according DIN 4109

Part No.	D (mm)	D (")	DN	G	B (mm)	H (mm)	h (mm)	b x s (mm)	$F_{a,z}$ (N)	Pack 1
3363014	13 - 14	¼	8	M8	46	38	23	20 x 1.00	450	100
3363018	15 - 18	⅜	10	M8	46	38	23	20 x 1.00	450	100
3363023	20 - 23	½	15	M8	51	43	25	20 x 1.00	450	100
3363028	25 - 28	¾	20	M8	57	48	28	20 x 1.00	450	100
3363035	32 - 35	1	25	M8	63	55	31	20 x 1.00	450	100
3363043	40 - 43	1¼	32	M8	72	63	35	20 x 1.25	600	100
3363051	48 - 51	1½	40	M8	80	71	39	20 x 1.25	600	50
3363054	53 - 56	-	-	M8	85	76	42	20 x 1.25	600	50
3363062	59 - 62	2	50	M8	91	82	45	20 x 1.25	600	50
3362018	15 - 18	⅜	10	M8/10	46	46	31	20 x 1.00	450	100
3362023	20 - 23	½	15	M8/10	51	51	33	20 x 1.00	450	100
3362028	25 - 28	¾	20	M8/10	57	56	36	20 x 1.00	450	100
3362035	32 - 35	1	25	M8/10	63	63	39	20 x 1.00	450	100
3362043	40 - 43	1¼	32	M8/10	72	71	43	20 x 1.25	600	100
3362051	48 - 51	1½	40	M8/10	80	79	47	20 x 1.25	600	50
3362054	53 - 56	-	-	M8/10	85	84	50	20 x 1.25	600	50
3362062	59 - 63	2	50	M8/10	91	90	53	20 x 1.25	600	50

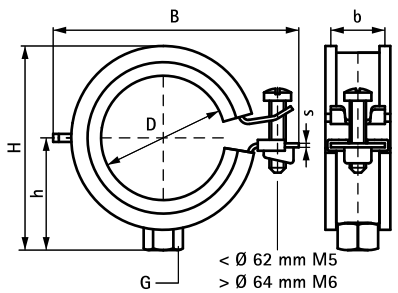

Complementary

129 BIS RapidRail® Fixing System
375 BIS Fixing Accessories
469 BIS Fastenings

Alternative

12 BISMAT® 2000

EN-SG 02/2022- Subject to modifications

KSB2 Clamp

(A 05 116)

for steel, copper, cast iron and plastic (multilayer) pipe 10 - 225 mm

M8/10



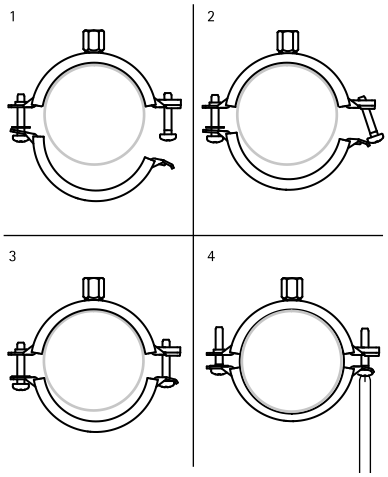

Features and Benefits

- two-screw clamp
- quick closing mechanism for easy locking of the clamp with one hand
- full range from 10 to 225 mm
- material: steel
- zinc plated
- temperature resistance from -30 °C to +120 °C
- age resistant lining
- noise insulating lining, EPDM rubber, black and green
- sound insulating lining according DIN 4109
- noise reduction according to ISO 3822-1 up to 21 dB(A)

Part No.	D (mm)	D (")	DN	G	B (mm)	H (mm)	h (mm)	b x s (mm)	cs	$F_{a,z}$ (N)	RAL	Pack 1
3396014	10 - 14	1/8 - 1/4	8	M8/10	59	42	30	20 x 1.25	M6	400	RAL[1]	100
3396019	15 - 19	3/8	10	M8/10	63	46	31	20 x 1.25	M6	400	RAL[1]	100
3396023	20 - 23	1/2	15	M8/10	68	51	33	20 x 1.25	M6	400	RAL[1]	100
3396028	25 - 28	3/4	20	M8/10	74	57	36	20 x 1.25	M6	400	RAL[1]	100
3396035	31 - 35	1	25	M8/10	80	63	39	20 x 1.25	M6	400	RAL[1]	100
3396039	36 - 39	-	-	M8/10	84	67	41	20 x 1.25	M6	400	RAL[1]	100
3396045	40 - 45	1 1/4	32	M8/10	91	74	45	20 x 1.25	M6	400	RAL[1]	100
3396052	48 - 52	1 1/2	40	M8/10	97	80	48	20 x 1.25	M6	400	RAL[1]	50
3396058	54 - 58	-	-	M8/10	104	87	51	20 x 1.25	M6	400	RAL[1]	50
3396064	60 - 64	2	50	M8/10	109	92	54	20 x 1.25	M6	400	RAL[1]	50
3396070	66 - 70	-	-	M8/10	118	100	58	20 x 1.50	M6	400	RAL[1]	50
3396079	75 - 79	2 1/2	65	M8/10	125	108	62	20 x 1.50	M6	715	RAL[1]	50
3396083	80 - 83	-	-	M8/10	132	114	65	20 x 1.50	M6	715	RAL[1]	50
3396091	88 - 91	3	80	M8/10	142	123	70	23 x 2.00	M6	715	RAL[1]	50
3396105	100 - 105	-	-	M8/10	155	137	77	23 x 2.00	M6	1,230	RAL[1]	50
3396115	108 - 115	4	100	M8/10	164	145	81	23 x 2.00	M6	1,230	RAL[1]	25
3396130	125 - 130	-	-	M8/10	181	162	89	23 x 2.00	M6	1,230	RAL[1]	25
3396140	133 - 140	5	125	M8/10	189	171	94	23 x 2.00	M6	1,230	RAL[1]	25
3396160	152 - 160	-	-	M8/10	209	190	102	23 x 2.00	M6	1,230	RAL[1]	25
3396169	165 - 169	6	150	M8/10	225	203	111	25 x 2.50	M8	2,390	RAL[1]	20
3396180	176 - 180	-	-	M8/10	238	209	117	25 x 2.50	M8	2,390	RAL[1]	15
3396200	192 - 200	-	-	M8/10	257	238	127	25 x 2.50	M8	2,390	RAL[1]	15
3396210	205 - 210	-	-	M8/10	269	249	133	25 x 2.50	M8	2,390	RAL[1]	10
3396225	219 - 225	8	200	M8/10	283	265	140	25 x 2.50	M8	2,390	RAL[1]	10

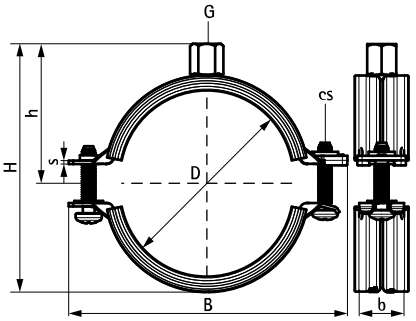

EN-SG 02/2022- Subject to modifications

KSB2 Clamp

(A 05 118)

for steel, copper, cast iron and plastic (multilayer) pipe 10 - 225 mm

M8/M10/½"



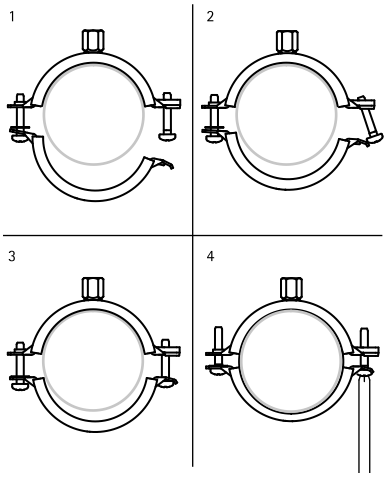

Features and Benefits

- two-screw clamp
- quick closing mechanism for easy locking of the clamp with one hand
- full range from 10 to 225 mm
- material: steel
- zinc plated
- temperature resistance from -30 °C to +120 °C
- age resistant lining
- noise insulating lining, EPDM rubber, black and green
- sound insulating lining according DIN 4109
- noise reduction according to ISO 3822-1 up to 21 dB(A)

Part No.	D (mm)	D (")	DN	G	B (mm)	H (mm)	h (mm)	b x s (mm)	cs	$F_{a,z}$ (N)	Pack 1
33965014	10 - 14	⅛ - ¼	8	M8/M10/½"	59	42	30	20 x 1.25	M6	400	100
33965019	15 - 19	⅜	10	M8/M10/½"	63	46	31	20 x 1.25	M6	400	100
33965023	20 - 23	½	15	M8/M10/½"	68	51	33	20 x 1.25	M6	400	100
33965028	25 - 28	¾	20	M8/M10/½"	74	57	36	20 x 1.25	M6	400	100
33965035	31 - 35	1	25	M8/M10/½"	80	63	39	20 x 1.25	M6	400	100
33965039	36 - 39	-	-	M8/M10/½"	84	67	41	20 x 1.25	M6	400	100
33965045	40 - 45	1¼	32	M8/M10/½"	91	74	45	20 x 1.25	M6	400	100
33965052	48 - 52	1½	40	M8/M10/½"	97	80	48	20 x 1.25	M6	400	50
33965058	54 - 58	-	-	M8/M10/½"	104	87	51	20 x 1.25	M6	400	50
33965064	60 - 64	2	50	M8/M10/½"	109	92	54	20 x 1.25	M6	400	50
33965070	66 - 70	-	-	M8/M10/½"	118	100	58	20 x 1.50	M6	400	50
33965079	75 - 79	2½	65	M8/M10/½"	125	108	62	20 x 1.50	M6	715	50
33965083	80 - 83	-	-	M8/10/G½"	132	114	65	20 x 1.50	M6	715	50
33965091	88 - 91	3	80	M8/M10/½"	142	123	70	23 x 2.00	M6	715	50
33965105	100 - 105	-	-	M8/M10/½"	155	137	77	23 x 2.00	M6	1,230	50
33965115	108 - 115	4	100	M8/M10/½"	164	145	81	23 x 2.00	M6	1,230	25
33965130	125 - 130	-	-	M8/M10/½"	181	162	89	23 x 2.00	M6	1,230	25
33965140	133 - 140	5	125	M8/M10/½"	189	171	94	23 x 2.00	M6	1,230	25
33965160	152 - 160	-	-	M8/M10/½"	209	190	102	23 x 2.00	M6	1,230	25
33965169	165 - 169	6	150	M8/M10/½"	225	203	111	25 x 2.50	M8	2,390	20
33965180	176 - 180	-	-	M8/M10/½"	238	209	117	25 x 2.50	M8	2,390	15
33965200	192 - 200	-	-	M8/M10/½"	257	238	127	25 x 2.50	M8	2,390	15
33965210	205 - 210	-	-	M8/M10/½"	269	249	133	25 x 2.50	M8	2,390	10
33965225	219 - 225	8	200	M8/M10/½"	283	265	140	25 x 2.50	M8	2,390	10

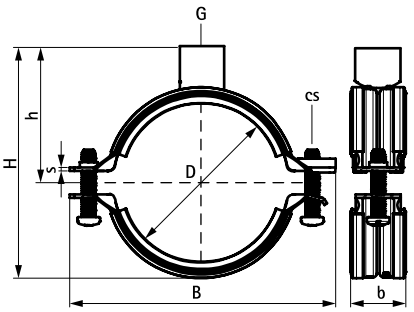

BIS Thread Adaptor for KSB2 Clamp (M8/M10/½")

(A 05 119)

only to be used in combination with KSB2 Clamp (M8/M10/½")



Features and Benefits

- zinc plated

Part No.	Model	G	B (mm)	H (mm)	Pack 1
6479421	Female Thread	½" x ½"	26.5	30.0	25

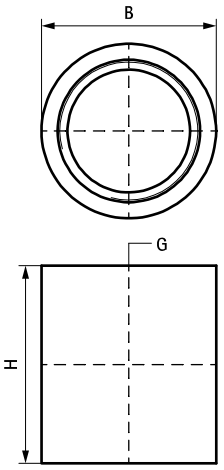

EN-SG 02/2022- Subject to modifications

2S Clamp with Lining (M8)

(A 05 132)

for steel, copper, cast iron and plastic (multilayer) pipe 10 - 67 mm

M8



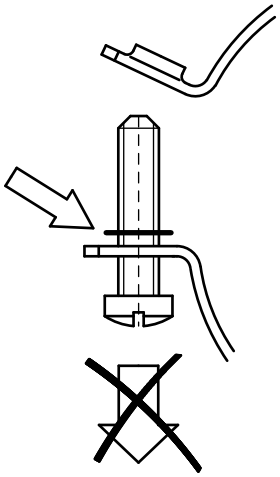

Features and Benefits

- gapless range
- rubber lining grips in steel parts to prevent sliding of the lining
- anti loss washers prevent screws from falling out during installation
- material: steel
- zinc plated
- temperature resistance from -30 °C to +120 °C
- noise insulating lining, EPDM rubber, black
- age resistant lining
- sound insulating lining according DIN 4109

Part No.	D (mm)	D (")	DN	G	B (mm)	H (mm)	h (mm)	b x s (mm)	cs	$F_{a,z}$ (N)	RAL	Pack 1
33335014	10 - 14	1/8 - 1/4	6 - 8	M8	51	32	20	20 x 1.00	M5	330	RAL[1]	50
33335019	15 - 19	3/8	10	M8	56	37	22	20 x 1.00	M5	330	RAL[1]	50
33335024	20 - 24	1/2	15	M8	62	43	25	20 x 1.00	M5	330	RAL[1]	50
33335030	25 - 30	3/4	20	M8	69	50	29	20 x 1.00	M5	330	RAL[1]	50
33335037	31 - 37	1	25	M8	75	56	32	20 x 1.00	M5	330	RAL[1]	50
33335046	38 - 46	1 1/4	32	M8	84	66	37	20 x 1.25	M5	500	RAL[1]	50
33335052	47 - 52	1 1/2	40	M8	93	75	41	20 x 1.25	M5	500	RAL[1]	50
33335061	53 - 61	2	50	M8	99	81	44	20 x 1.25	M5	500	RAL[1]	50
33335067	62 - 67	-	-	M8	106	87	47	20 x 1.25	M5	500	RAL[1]	50

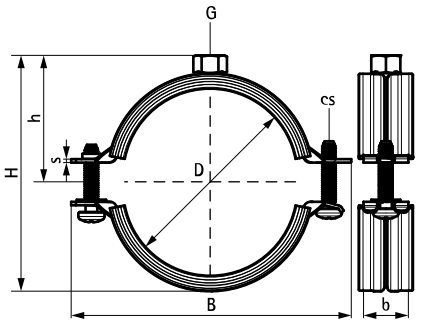

EN-SG 02/2022- Subject to modifications

2S Clamp with Lining (M8/10)

(A 05 136)

for steel, copper, cast iron and plastic (multilayer) pipe 10 - 225 mm

M8/10



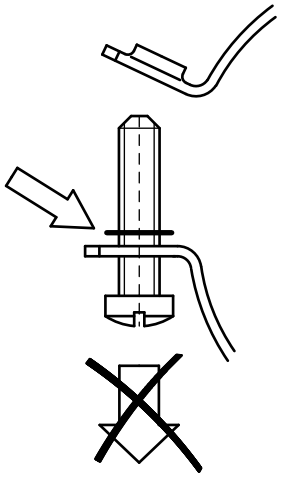

Features and Benefits

- gapless range
- rubber lining grips in steel parts to prevent sliding of the lining
- anti loss washers prevent screws from falling out during installation
- material: steel
- zinc plated
- temperature resistance from -30 °C to +120 °C
- noise insulating lining, EPDM rubber, black
- age resistant lining
- sound insulating lining according DIN 4109

Part No.	D (mm)	D (")	DN	G	B (mm)	H (mm)	h (mm)	b x s (mm)	cs	$F_{a,z}$ (N)	RAL	Pack 1
33435014	10 - 14	⅛ - ¼	6 - 8	M8/10	51	40	28	20 x 1.00	M5	330	RAL[1]	50
33435019	15 - 19	⅜	10	M8/10	56	45	30	20 x 1.00	M5	330	RAL[1]	50
33435024	20 - 24	½	15	M8/10	62	51	33	20 x 1.00	M5	330	RAL[1]	50
33435030	25 - 30	¾	20	M8/10	69	58	37	20 x 1.00	M5	330	RAL[1]	50
33435037	31 - 37	1	25	M8/10	75	64	40	20 x 1.00	M5	330	RAL[1]	50
33435046	38 - 46	1¼	32	M8/10	84	74	45	20 x 1.25	M5	500	RAL[1]	50
33435052	47 - 52	1½	40	M8/10	93	83	49	20 x 1.25	M5	500	RAL[1]	50
33435061	53 - 61	2	50	M8/10	99	89	52	20 x 1.25	M5	500	RAL[1]	50
33435067	62 - 67	-	-	M8/10	106	95	55	20 x 1.25	M5	500	RAL[1]	50
33435074	68 - 74	-	-	M8/10	118	103	60	20 x 1.50	M6	850	RAL[1]	50
33435081	75 - 81	2½	65	M8/10	124	109	63	20 x 1.50	M6	850	RAL[1]	50
33435087	82 - 87	-	-	M8/10	130	115	66	20 x 1.50	M6	850	RAL[1]	50
33435095	88 - 95	3	80	M8/10	143	127	72	23 x 2.00	M6	1,000	RAL[1]	50
33435103	96 - 103	-	-	M8/10	153	136	76	23 x 2.00	M6	1,000	RAL[1]	50
33435112	104 - 112	-	-	M8/10	159	142	79	23 x 2.00	M6	1,000	RAL[1]	25
33435118	113 - 118	4	100	M8/10	168	151	84	23 x 2.00	M6	1,000	RAL[1]	25
33435127	119 - 127	-	-	M8/10	178	161	89	23 x 2.00	M6	1,000	RAL[1]	25
33435137	128 - 137	-	-	M8/10	185	168	92	23 x 2.00	M6	1,000	RAL[1]	25
33435144	138 - 144	5	125	M8/10	194	177	97	23 x 2.00	M6	1,000	RAL[1]	25
33435153	145 - 153	-	-	M8/10	203	186	101	23 x 2.00	M6	1,000	RAL[1]	25
33435162	154 - 162	-	-	M8/10	211	194	105	23 x 2.00	M6	1,000	RAL[1]	15
33435172	163 - 172	6	150	M8/10	227	210	114	25 x 2.50	M6	2,350	RAL[1]	15
33435183	173 - 183	-	-	M8/10	239	221	120	25 x 2.50	M6	2,350	RAL[1]	15
33435194	184 - 194	-	-	M8/10	249	232	125	25 x 2.50	M6	2,350	RAL[1]	15
33435205	195 - 205	-	-	M8/10	260	243	130	25 x 2.50	M6	2,350	RAL[1]	15
33435216	206 - 216	-	-	M8/10	271	253	136	25 x 2.50	M6	2,350	RAL[1]	10
33435225	217 - 225	8	200	M8/10	279	261	140	25 x 2.50	M6	2,350	RAL[1]	10

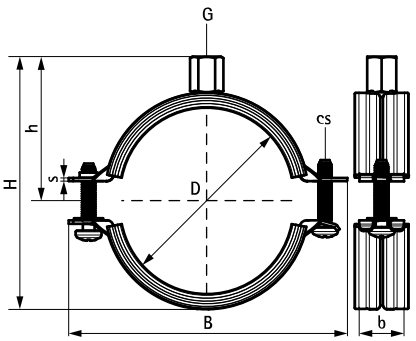

EN-SG 02/2022- Subject to modifications

BIS Heavy Duty Clamp HD1501 (BUP1000)

(A 10 04)

for metal pipes 15 - 227 mm

M8/10 - M10/12



Features and Benefits

- two-part clamp with two locking bolts
- up to and including 5": locking nut is captive, hidden in plastic holder
- heavy design
- bolts secured with anti-loss washer
- with CO_2 welded connection nut
- sound insulating lining according DIN 4109
- tested for fire safety
- material: steel
- surface protection:
  - product is part of the BIS UltraProtect® 1000 system
  - suitable for in- and outdoor applications
  - stands min. 1,000 hours salt spray test (max. 5% red rust) according to ISO 9227
- noise insulating lining, EPDM rubber, black
- also available: noise insulating lining of silicone rubber (reddish brown), heat resistant up to +200 °C (A 35 15)
- age resistant lining

RAL GÜTEZEICHEN ROHRBEFESTIGUNG
RAL-GZ 655/B
Cert.Nr. 2011-12a

RAL GÜTEZEICHEN BRANDGEPRÜFTE ROHRBEFESTIGUNG
RAL-GZ 656
Cert.Nr. 2011-14

Part No.	D (mm)	D (")	DN	G	B (mm)	H (mm)	h (mm)	b x s (mm)	cs	$F_{a,z}$ (N)	RAL	Pack 1
33138019	15 - 19	3/8	10	M8/10	81	55	35	30 x 2.5	M8	1,500	RAL[2]	25
33138023	19 - 23	1/2	15	M8/10	84	58	37	30 x 2.5	M8	1,500	RAL[2]	25
33138029	25 - 29	3/4	20	M8/10	91	64	40	30 x 2.5	M8	1,500	RAL[2]	25
33138035	30 - 35	1	25	M8/10	98	70	43	30 x 2.5	M8	1,500	RAL[2]	25
33138045	40 - 45	1 1/4	32	M8/10	109	80	48	30 x 2.5	M8	1,500	RAL[2]	25
33138051	46 - 51	1 1/2	40	M8/10	115	86	51	30 x 2.5	M8	1,500	RAL[2]	25
33138059	53 - 59	-	-	M8/10	122	93	55	30 x 2.5	M8	1,500	RAL[2]	25
33138064	59 - 64	2	50	M8/10	129	99	57	30 x 2.5	M8	1,500	RAL[2]	25
33148071	65 - 71	-	-	M10/12	136	116	71	30 x 3.0	M8	2,300	RAL[2]	25
33148078	72 - 78	2 1/2	65	M10/12	144	123	74	30 x 3.0	M8	2,300	RAL[2]	25
33148085	79 - 85	-	-	M10/12	152	130	78	30 x 3.0	M8	2,300	RAL[2]	25
33148092	86 - 92	3	80	M10/12	159	136	81	30 x 3.0	M8	2,300	RAL[2]	25
33148109	101 - 109	-	-	M10/12	175	154	90	30 x 3.0	M8	2,300	RAL[2]	25
33148116	108 - 116	4	100	M10/12	182	160	93	30 x 3.0	M8	2,300	RAL[2]	25
33148133	125 - 133	-	-	M10/12	200	178	102	30 x 3.0	M8	2,300	RAL[2]	25
33148140	132 - 140	5	125	M10/12	207	184	104	30 x 3.0	M8	2,300	RAL[2]	15
33148169	159 - 169	6	150	M10/12	254	223	124	38 x 4.0	M10	3,800	RAL[2]	15
33148188	178 - 188	-	-	M10/12	274	242	133	38 x 4.0	M10	3,800	RAL[2]	15
33148204	194 - 204	-	-	M10/12	290	258	141	38 x 4.0	M10	3,800	RAL[2]	15
33148213	203 - 213	-	-	M10/12	299	267	146	38 x 4.0	M10	3,800	RAL[2]	15
33148227	217 - 227	8	200	M10/12	322	282	152	38 x 4.0	M12	3,800	RAL[2]	2

RAL[2] = tested, certified and monitored by a third party according to RAL-GZ 655/B and RAL-GZ 656. For detailed technical information about our RAL marked products, please see the RAL datasheet in our web catalogue.

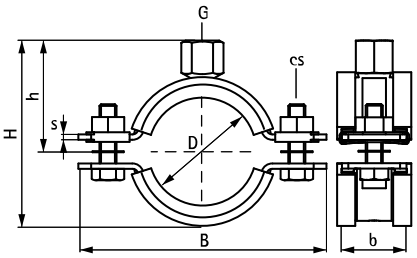

Complementary

201 BIS RapidStrut® Fixing System
375 BIS Fixing Accessories
469 BIS Fastenings

Complementary

40 BIS Silicone Profile

EN-SG 02/2022- Subject to modifications

BIS Heavy Duty Clamp HD1501 (BUP1000)

(A 10 06)

for metal pipes 159 - 509 mm

M16



Features and Benefits

- two-part clamp with two locking bolts
- heavy design
- bolts secured with anti-loss washer
- with CO_2 welded connection nut
- material: steel
- surface protection:
  - product is part of the BIS UltraProtect® 1000 system
  - suitable for in- and outdoor applications
  - stands min. 1,000 hours salt spray test (max. 5% red rust) according to ISO 9227
- noise insulating lining, EPDM rubber, black
- also available: noise insulating lining of silicone rubber (reddish brown), heat resistant up to +200 °C (A 35 15)
- age resistant lining
- sound insulating lining according DIN 4109
- tested for fire safety

RAL GÜTEZEICHEN ROHRBEFESTIGUNG
RAL-GZ 655/B
Cert.Nr. 2011-12a

RAL GÜTEZEICHEN BRANDGEPRÜFTE ROHRBEFESTIGUNG
RAL-GZ 656
Cert.Nr. 2011-14

Part No.	D (mm)	D (°)	DN	G	B (mm)	H (mm)	h (mm)	b x s (mm)	cs	$F_{a,z}$ (N)	RAL	Pack 1
33168169	159 - 169	6	150	M16	254	220	120	38 x 4.0	M10	3,800	RAL[2]	15
33168188	178 - 188	-	-	M16	274	239	130	38 x 4.0	M10	3,800	RAL[2]	15
33168204	194 - 204	-	-	M16	290	255	138	38 x 4.0	M10	3,800	RAL[2]	15
33168213	203 - 213	-	-	M16	299	264	143	38 x 4.0	M10	3,800	RAL[2]	15
33168227	217 - 227	8	200	M16	322	278	150	38 x 4.0	M12	3,800	RAL[2]	2
33168250	240 - 250	-	-	M16	345	302	163	38 x 4.0	M12	3,800	RAL[1]	2
33168275	265 - 275	10	250	M16	367	327	175	48 x 5.0	M12	9,200	RAL[1]	2
33168325	315 - 325	12	300	M16	414	374	198	48 x 5.0	M12	9,200	RAL[1]	2
33168364	354 - 364	14	350	M16	453	412	217	48 x 5.0	M12	9,200	RAL[1]	2
33168408	398 - 408	16	400	M16	497	456	239	48 x 5.0	M12	9,200	RAL[1]	2
33168458	448 - 458	18	450	M16	548	506	264	48 x 5.0	M12	9,200	RAL[1]	2
33168509	499 - 509	20	500	M16	599	557	289	48 x 5.0	M12	9,200	RAL[1]	2

RAL[1] = tested, certified and monitored by a third party according to RAL-GZ 655/B.
RAL[2] = tested, certified and monitored by a third party according to RAL-GZ 655/B and RAL-GZ 656.
For detailed technical information about our RAL marked products, please see the RAL datasheet in our web catalogue.

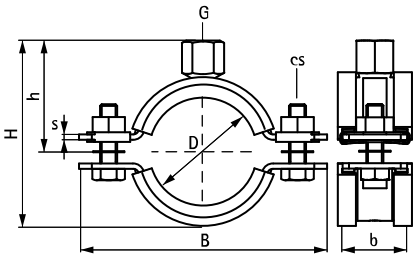

Complementary

201 BIS RapidStrut® Fixing System
375 BIS Fixing Accessories
469 BIS Fastenings

Complementary

40 BIS Silicone Profile

EN-SG 02/2022- Subject to modifications

BIS Heavy Duty Clamp HD1501 (BUP1000)

(A 10 09)

for metal pipes 15 - 509 mm

G1½"



Features and Benefits

- two-part clamp with two locking bolts
- up to and including 5": locking nut is captive, hidden in plastic holder
- heavy design
- bolts secured with anti-loss washer
- with CO_2 welded connection nut
- age resistant lining
- sound insulating lining according DIN 4109
- tested for fire safety
- material: steel
- surface protection:
  - product is part of the BIS UltraProtect® 1000 system
  - suitable for in- and outdoor applications
  - stands min. 1,000 hours salt spray test (max. 5% red rust) according to ISO 9227
- noise insulating lining, EPDM rubber, black
- also available: noise insulating lining of silicone rubber (reddish brown), heat resistant up to +200 °C (A 35 15)

RAL GÜTEZEICHEN ROHRBEFESTIGUNG
RAL-GZ 655/B
Cert.Nr. 2011-12a

RAL GÜTEZEICHEN BRANDGEPRÜFTE ROHRBEFESTIGUNG
RAL-GZ 656
Cert.Nr. 2011-14

Part No.	D (mm)	D (")	DN	G	B (mm)	H (mm)	h (mm)	b x s (mm)	cs	$F_{a,z}$ (N)	RAL	Pack 1
33178019	15 - 19	3/8	10	G½"	81	50	30	30 x 2.5	M8	1,500	RAL[2]	25
33178023	19 - 23	½	15	G½"	84	53	32	30 x 2.5	M8	1,500	RAL[2]	25
33178029	25 - 29	¾	20	G½"	91	59	35	30 x 2.5	M8	1,500	RAL[2]	25
33178035	30 - 35	1	25	G½"	98	65	38	30 x 2.5	M8	1,500	RAL[2]	25
33178045	40 - 45	1¼	32	G½"	109	75	43	30 x 2.5	M8	1,500	RAL[2]	25
33178051	46 - 51	1½	40	G½"	115	81	46	30 x 2.5	M8	1,500	RAL[2]	25
33178059	53 - 59	-	-	G½"	122	88	50	30 x 2.5	M8	1,500	RAL[2]	25
33178064	59 - 64	2	50	G½"	129	94	53	30 x 2.5	M8	1,500	RAL[2]	25
33178071	65 - 71	-	-	G½"	136	102	57	30 x 3.0	M8	2,300	RAL[2]	25
33178078	72 - 78	2½	65	G½"	144	109	60	30 x 3.0	M8	2,300	RAL[2]	25
33178085	79 - 85	-	-	G½"	152	116	64	30 x 3.0	M8	2,300	RAL[2]	25
33178092	86 - 92	3	80	G½"	159	123	68	30 x 3.0	M8	2,300	RAL[2]	25
33178109	101 - 109	-	-	G½"	175	140	74	30 x 3.0	M8	2,300	RAL[2]	25
33178116	108 - 116	4	100	G½"	182	147	79	30 x 3.0	M8	2,300	RAL[2]	25
33178133	125 - 133	-	-	G½"	200	164	86	30 x 3.0	M8	2,300	RAL[2]	25
33178140	132 - 140	5	125	G½"	207	171	91	30 x 3.0	M8	2,300	RAL[2]	15
33178169	159 - 169	6	150	G½"	254	210	110	38 x 4.0	M10	3,800	RAL[2]	15
33178188	178 - 188	-	-	G½"	274	229	120	38 x 4.0	M10	3,800	RAL[2]	15
33178204	194 - 204	-	-	G½"	290	245	128	38 x 4.0	M10	3,800	RAL[2]	15
33178213	203 - 213	-	-	G½"	299	254	133	38 x 4.0	M10	3,800	RAL[2]	15
33178227	217 - 227	8	200	G½"	322	268	140	38 x 4.0	M10	3,800	RAL[2]	2
33178250	240 - 250	-	-	G½"	345	292	153	38 x 4.0	M12	3,800	RAL[1]	2
33178275	265 - 275	10	250	G½"	367	317	165	48 x 5.0	M12	9,200	RAL[1]	2
33178325	315 - 325	12	300	G½"	414	364	188	48 x 5.0	M12	9,200	RAL[1]	2
33178364	354 - 364	14	350	G½"	453	402	207	48 x 5.0	M12	9,200	RAL[1]	2
33178408	398 - 408	16	400	G½"	497	446	229	48 x 5.0	M12	9,200	RAL[1]	2
33178458	448 - 458	18	450	G½"	548	496	254	48 x 5.0	M12	9,200	RAL[1]	2
33178509	499 - 509	20	500	G½"	599	547	279	48 x 5.0	M12	9,200	RAL[1]	2

RAL[1] = tested, certified and monitored by a third party according to RAL-GZ 655/B.
RAL[2] = tested, certified and monitored by a third party according to RAL-GZ 655/B and RAL-GZ 656.
For detailed technical information about our RAL marked products, please see the RAL datasheet in our web catalogue.

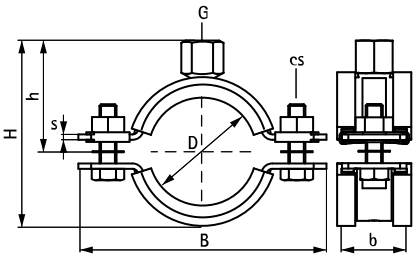

Complementary

201 BIS RapidStrut® Fixing System
375 BIS Fixing Accessories
469 BIS Fastenings

Complementary

40 BIS Silicone Profile
450 BIS Threaded Tube

BIS Single Band Pipe Clamp

(A 10 25)

for metal pipes 12 - 114 mm



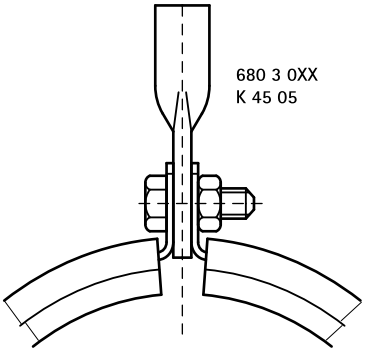

Features and Benefits

- one-part clamp
- fixing by using suspension eye (not included)
- clamp is locked by the mounting system (no other projections)
- space saving
- tube insulation can easily be fitted
- material: steel 1.0226
- pre-galvanized
- noise insulating lining, EPDM rubber, black
- age resistant lining
- sound insulating lining according DIN 4109

Part No.	D (mm)	D (")	DN	B (mm)	H (mm)	h (mm)	b x s (mm)	d1 (mm)	$F_{a,z}$ (N)	Pack 1
3385012	12	-	-	24	41	19	15 x 1.0	Ø 7	600	50
3385016	16	-	-	28	45	21	15 x 1.0	Ø 7	600	50
3385018	18	3/8	10	30	47	22	15 x 1.0	Ø 7	600	50
3385022	22	1/2	15	34	51	24	15 x 1.0	Ø 7	600	50
3385028	28	3/4	20	41	58	28	15 x 1.0	Ø 7	600	50
3385036	36	-	-	48	65	31	15 x 1.0	Ø 7	600	50
3385042	42	1 1/4	32	54	71	34	15 x 1.0	Ø 7	600	50
3385048	48	1 1/2	40	62	78	37	20 x 1.0	Ø 7	600	50
3385057	57	-	-	73	94	46	20 x 1.0	Ø 9	600	25
3385060	60	2	50	76	96	47	20 x 1.0	Ø 9	600	25
3385070	70	-	-	87	107	51	25 x 1.5	Ø 9	750	25
3385076	76	2 1/2	65	93	113	58	25 x 1.5	Ø 9	750	25
3385089	89	3	80	106	126	62	25 x 1.5	Ø 9	750	25
3385108	108	-	-	124	152	75	25 x 2.0	Ø 11	1,000	25
3385114	114	4	100	130	158	78	25 x 2.0	Ø 11	1,000	25

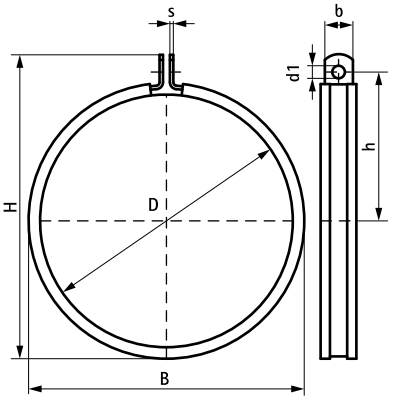

Complementary

201 BIS RapidStrut® Fixing System
469 BIS Fastenings
420 BIS Suspension Eye (Female Threaded)

EN-SG 02/2022- Subject to modifications

BIS Duplo Double Clamp with Lining

(A 15 05)

for metal heating pipes 15 - 33 mm



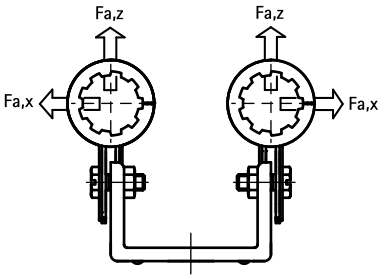

Features and Benefits

- two clamps on connection bracket
- for fixing of two pipes
- space saving
- clampshells reinforced
- two parts of the clamp interlock
- bracket reinforced for extra strength
- tube insulation can easily be fitted
- adjustable distance between pipe and wall
- material: steel
- pre-galvanized
- age resistant lining
- sound insulating lining according DIN 4109

Part No.	D (mm)	D (")	DN	B (mm)	H1 (mm)	h1 (mm)	Colour	$F_{a,z}$ (N)	$F_{a,x}$ (N)	Pack 1
3211015	15	-	-	82	58 - 74	48 - 64	White, TPE	100	200	25
3211022	22	½	15	89	65 - 81	51 - 67	White, TPE	110	330	25
3215015	15	-	-	82	58 - 74	48 - 64	Black, EPDM	100	200	25
3215017	18	⅜	10	85	61 - 77	51 - 67	Black, EPDM	100	200	25
3215021	22	½	15	89	65 - 81	51 - 67	Black, EPDM	110	330	25
3215027	28	¾	20	95	71 - 87	54 - 70	Black, EPDM	110	330	25
3215033	33	1	25	104	76 - 92	57 - 73	Black, EPDM	110	330	25

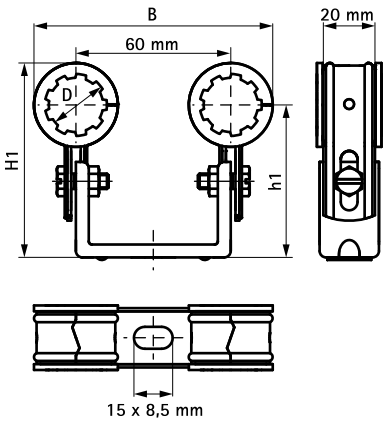

Complementary
588 BIS Under Floor / Radiator Brackets

Alternative
100 BIS Duplo KS

walraven

BIS Double Wall Clamp with Lining

(A 15 10)

for metal heating pipes 15 - 33 mm



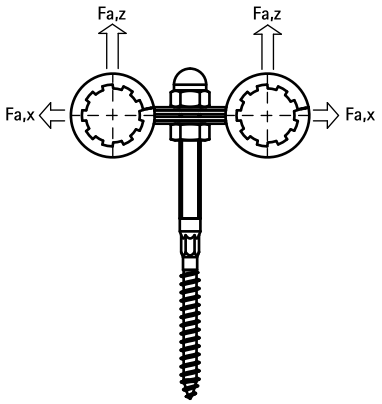

Features and Benefits

- for fixing of two pipes
- two parts of the clamp interlock
- bolt-wood screw with shoulder, making a lock nut unnecessary
- material: steel
- pre-galvanized
- age resistant lining
- sound insulating lining according DIN 4109

Part No.	D (mm)	D (")	DN	B (mm)	H (mm)	k (mm)	$F_{a,z}$ (N)	$F_{a,x}$ (N)	Pack 1
3535015	15	-	-	87	124	60	230	200	25
3535017	18	3/8	10	89	125	60	230	200	25
3535021	22	1/2	15	93	126	60	230	330	25
3535027	28	3/4	20	98	129	60	230	330	25
3535033	33	1	25	115	133	70	230	330	25

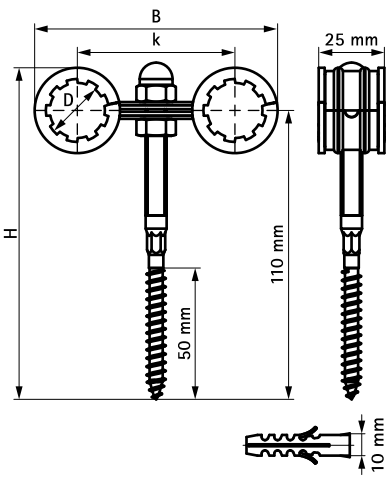

Complementary
588 BIS Under Floor / Radiator Brackets

Alternative
29 BIS Duplo Double Clamp with Lining

EN-SG 02/2022- Subject to modifications

BIS Duplo KSB1

(A 15 15)

for metal heating pipes 15 - 35 mm



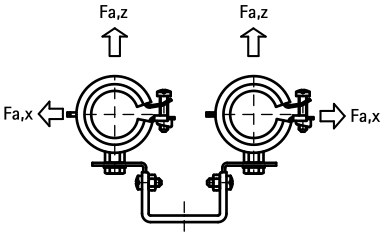

Features and Benefits

- two clamps on connection bracket
- clamp with quick locking system, type KSB
- for fixing of two pipes
- bracket reinforced for extra strength
- centre distance and distance between wall and clamp adjustable
- material: steel
- zinc plated
- noise insulating lining, EPDM rubber, black
- age resistant lining
- sound insulating lining according DIN 4109

Part No.	D (mm)	D (")	DN	s (mm)	b x s (mm)	H1 (mm)	h1 (mm)	B1 (mm)	$F_{a,z}$ (N)	$F_{a,x}$ (N)	Pack 1
3393218	15 - 18	3/8	10	2.0	20 x 2.0	82 - 94	67 - 79	142 - 165	210	110	25
3393223	20 - 23	1/2	15	2.0	20 x 2.0	93 - 105	70 - 82	142 - 177	210	110	25
3393228	25 - 28	3/4	20	2.0	20 x 2.0	96 - 108	73 - 85	150 - 180	210	110	25
3393235	32 - 35	1	25	2.0	20 x 2.0	100 - 112	77 - 89	152 - 188	210	110	25

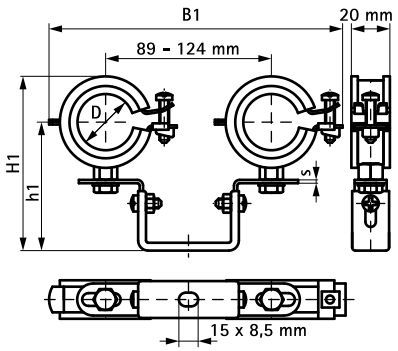

BISMAT® 5000

(A 25 05)

for plastic pipes 16 - 50 mm

M8



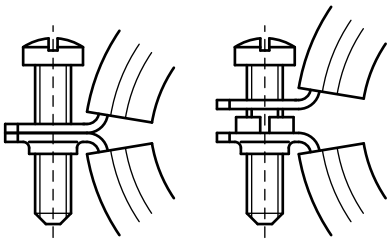

Features and Benefits

- single screw clamp
- with BISMAT® quick locking system
- with removable spacer washers, making the clamp suitable for either sliding or anchoring
- suitable for plastic pipe
- material: steel
- zinc plated
- noise insulating lining, EPDM rubber, green
- lining: very suitable for applications with plastic pipes
- inner part of lining is flush to improve sliding of pipe in clamp
- age resistant lining
- sound insulating lining according DIN 4109

RAL GÜTEZEICHEN ROHRBEFESTIGUNG
RAL-GZ 655/B
Cert.Nr. 2010-24

Part No.	D (mm)	G	B (mm)	H (mm)	h (mm)	b x s (mm)	$F_{a,z}$ (N)	RAL	Pack 1
3483018	16	M8	48	40	22	20 x 1.00	350	RAL[1]	50
3483023	20	M8	55	43	23	20 x 1.00	350	RAL[1]	50
3483028	25	M8	60	48	26	20 x 1.00	350	RAL[1]	50
3483035	32	M8	67	57	30	20 x 1.00	350	RAL[1]	50
3483043	40	M8	75	66	34	20 x 1.25	420	RAL[1]	50
3483053	50	M8	85	75	37	20 x 1.25	420	RAL[1]	50

RAL[1] = tested, certified and monitored by a third party according to RAL-GZ 655/B.
For detailed technical information about our RAL marked products, please see the RAL datasheet in our web catalogue.

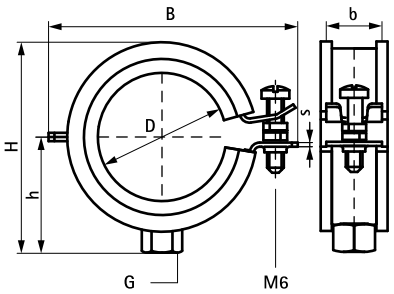

Complementary

129 BIS RapidRail® Fixing System
469 BIS Fastenings

EN-SG 02/2022- Subject to modifications

Bifix® 5000 G2 (BUP1000)

(A 25 09)

for plastic pipes 16 - 200 mm

M8/10

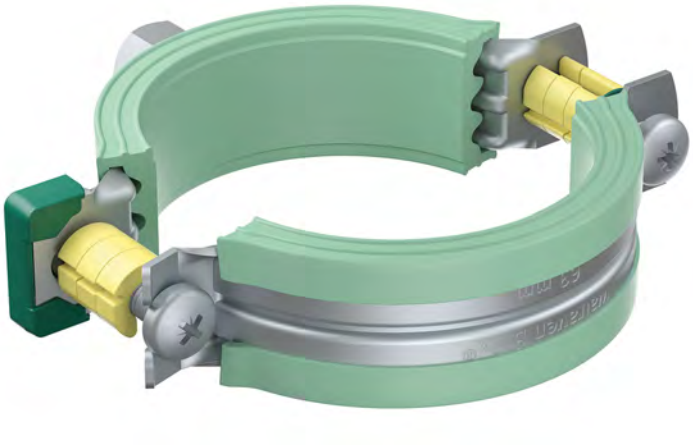

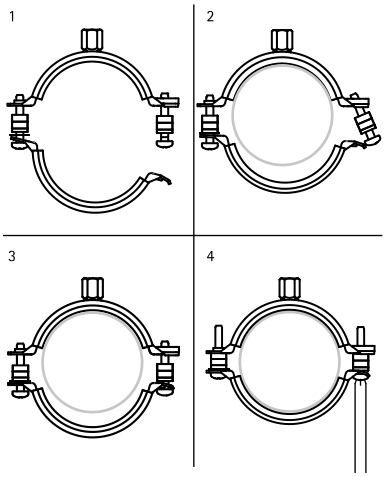

Features and Benefits

- two-screw clamp
- with quick locking system
- with removable spacer washers, making the clamp suitable for either sliding or anchoring
- material: steel
- surface protection:
  - product is part of the BIS UltraProtect® 1000 system
  - suitable for in- and outdoor applications
  - stands min. 1,000 hours salt spray test (max. 5% red rust) according to ISO 9227
- noise insulating lining, EPDM rubber, green
- lining: very suitable for applications with plastic pipes
- inner part of lining is flush to improve sliding of pipe in clamp
- age resistant lining
- sound insulating lining according DIN 4109

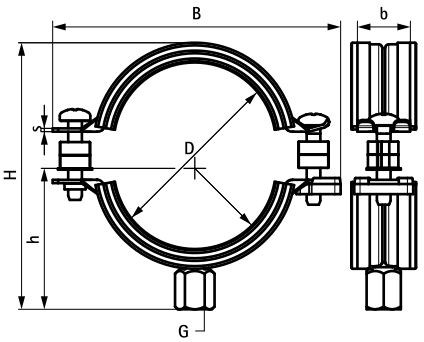

Part No.	D (mm)	G	B (mm)	H (mm)	h (mm)	b x s (mm)	$F_{a,z}$ (N)	Pack 1
3188016	16	M8/10	63	50	31	20 x 1.25	600	50
3188020	20	M8/10	68	54	33	20 x 1.25	600	50
3188025	25	M8/10	74	59	36	20 x 1.25	600	50
3188032	32	M8/10	80	61	39	20 x 1.25	600	50
3188040	40	M8/10	91	73	45	20 x 1.25	600	50
3188050	50	M8/10	97	84	48	20 x 1.25	600	50
3188056	56	M8/10	104	90	51	20 x 1.25	600	50
3188058	58	M8/10	109	91	54	20 x 1.25	600	50
3188063	63	M8/10	109	99	54	20 x 1.25	600	50
3188075	75	M8/10	125	109	62	20 x 1.50	600	50
3188078	78	M8/10	132	111	65	20 x 1.50	600	25
3188090	90	M8/10	142	128	70	23 x 2.00	1,400	25
3188110	110	M8/10	164	144	81	23 x 2.00	1,400	25
3188125	125	M8/10	181	159	89	23 x 2.00	1,400	25
3188135	135	M8/10	189	169	94	23 x 2.00	1,400	25
3188160	160	M8/10	225	196	111	25 x 2.50	1,700	10
3188200	200	M8/10	269	237	125	25 x 2.50	1,700	10

Complementary

129 BIS RapidRail® Fixing System

Alternative

32 BISMAT® 5000

BIS Stand Pipe Bracket

(A 30 05)

for stand pipes DN 70 - DN 200



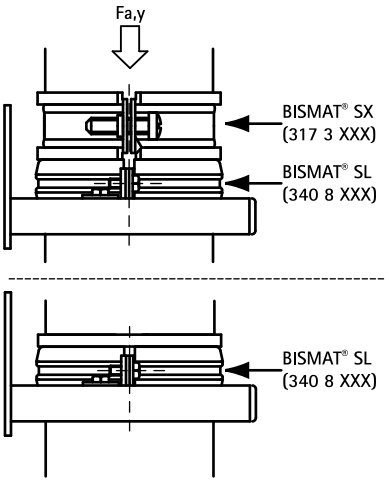

Features and Benefits

- one-part console set with BISMAT® SL Guidance clamp
- fixing free of tension throughout infinite adjustment
- material: steel
- zinc plated
- noise insulating lining, EPDM rubber, black
- lining with unique noise insulating profile at the outside edges
- age resistant lining
- sound insulating lining according DIN 4109

Part No.	D (mm)	DN	B (mm)	k (mm)	$F_{a,y}$ (N)	Pack 1
4323070	78	70	189	144	3,000	125
4323080	83	80	194	149	3,000	125
4323100	110	100	219	174	3,000	120
4323125	135	125	246	201	3,000	100
4323150	160	150	269	224	3,000	100
4323200	210	200	319	274	3,000	80

Max. allowed load ($F_{a,y1}$): distance between wall and centre of clamp during test 130 mm. When used in combination with the BISMAT® SX-Socket Clamp the max. allowed load is determined by the SX Clamp (page A 30 15).

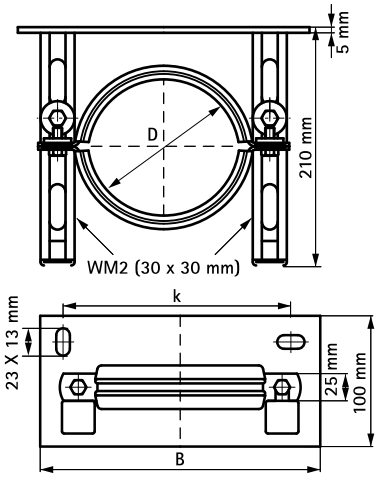

Complementary

36 BISMAT® SX Socket Clamp
37 BISMAT® SL Guidance Clamp

Alternative

35 BISMAT® 1000 Stand Pipe Clamp

EN-SG 02/2022- Subject to modifications

BISMAT® 1000 Stand Pipe Clamp

(A 30 10)

for stand pipes DN 70 - DN 200



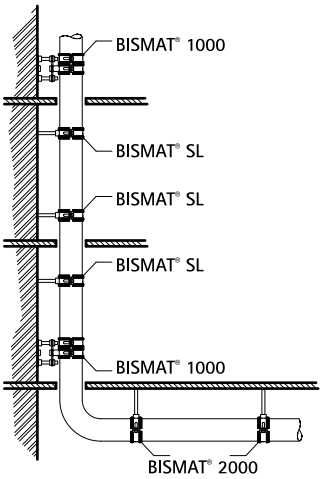

Features and Benefits

- adjustable wall plate with BISMAT® SL Guidance clamp and BISMAT® SX Socket clamp
- unique set for the installation of cast iron or plastic stand pipes
- to be mounted every second floor, height 3.0 m (from Ø 125 mm, one each floor)
- fixing free of tension throughout infinite adjustment
- adjustable distance between pipe and wall
- material: steel
- zinc plated
- noise insulating lining, EPDM rubber, black
- age resistant lining
- noise insulation tested according to DIN 4109 (insulation exceeds standards)

Part No.	D (mm)	DN	Type	B (mm)	H1 (mm)	h1 (mm)	$F_{a,y}$ (N)	Pack 1
3363070	75	70	KA	144	140 - 150	93 - 102	650	5
3363075	78	70	GA	154	140 - 150	93 - 103	650	5
3363080	83	80	GA	144	143 - 153	94 - 104	820	5
3363090	89	80	-	164	147 - 154	102 - 109	820	5
3363100	110	100	KA / GA	176	175 - 185	110 - 120	820	5
3363125	125	125	KA	192	190 - 200	118 - 128	820	5
3363137	135	125	GA	192	200 - 210	123 - 133	820	5
3363150	160	150	KA / GA	233	235 - 245	137 - 147	820	5
3363200	210	200	GA	284	280 - 290	162 - 172	820	5

KA = Plastic drain pipe, GA = cast iron drain pipe

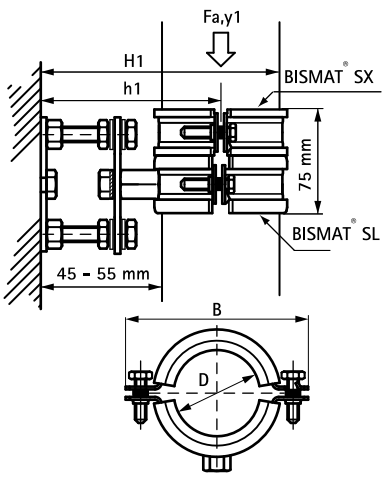

Complementary

37 BISMAT® SL Guidance Clamp

Alternative

34 BIS Stand Pipe Bracket

EN-SG 02/2022- Subject to modifications

BISMAT® SX Socket Clamp

(A 30 15)

for stand pipes DN 70 - DN 200



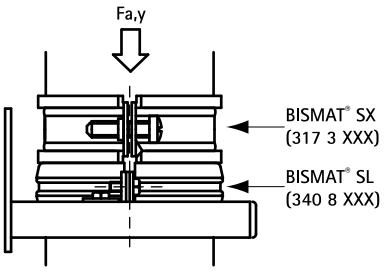

Features and Benefits

- two-screw clamp
- with quick locking system
- alternative for cast iron socket clamp or plastic drain pipes
- ideal for application in combination with BIS Stand pipe brackets (Part No. 4323XXX)
- material: steel
- zinc plated
- EPDM rubber lining, black
- age resistant lining
- sound insulating lining according DIN 4109

Part No.	D (mm)	DN	Type	B (mm)	H (mm)	b x s (mm)	$F_{a,y}$ (N)	Pack 1
3173075	75	70	KA	149	104	25 x 2.5	650	10
3173078	78	70	GA	154	109	25 x 2.5	650	10
3173085	83	80	GA	159	114	25 x 2.5	700	10
3173116	110	100	KA / GA	184	139	25 x 2.5	1,000	10
3173132	125	125	KA	199	154	25 x 2.5	1,100	10
3173141	137	125	GA	211	166	25 x 2.5	1,250	10
3173168	160	150	KA / GA	234	189	25 x 2.5	1,500	10
3173219	210	200	GA	284	239	25 x 2.5	1,500	5

KA = Plastic drain pipe, GA = cast iron drain pipe

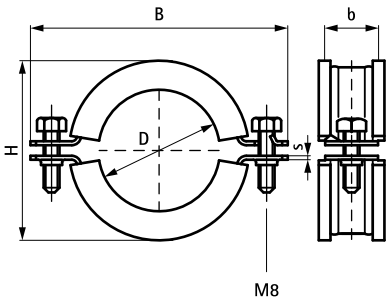

EN-SG 02/2022- Subject to modifications

BISMAT® SL Guidance Clamp

(A 30 20)

for stand pipes DN 70 - DN 200

M10



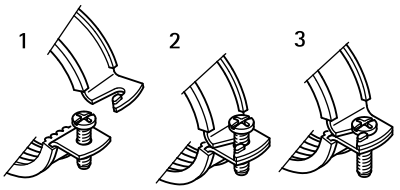

Features and Benefits

- two-screw clamp
- with quick locking system
- the inside diameter of the clamp is designed for noise isolating plastic pipes (e.g. Friaphon®, As®, Raupiano®) and cast iron drain pipes
- suitable for plastic pipe
- spacer washers between the flanges guarantee a limited grip to protect the rubber from crushing
- material: steel
- zinc plated
- noise insulating lining, EPDM rubber, black
- lining with unique noise insulating profile at the outside edges
- age resistant lining
- sound insulating lining according DIN 4109

Part No.	D (mm)	DN	Type	G	B (mm)	H (mm)	h (mm)	b x s (mm)	Pack 1
3408050	50	50	KA	M10	124	96	58	25 x 3.0	10
3408070	78	70	GA	M10	154	133	75	25 x 3.0	10
3408075	75	70	KA	M10	149	129	74	25 x 3.0	10
3408090	90	80	KA	M10	164	143	81	25 x 3.0	10
3408100	110	100	KA / GA	M10	184	164	91	25 x 3.0	10
3408125	125	125	KA	M10	199	179	99	25 x 3.0	10
3408137	135	125	GA	M10	211	190	104	25 x 3.0	10
3408150	160	150	KA / GA	M10	234	214	116	25 x 3.0	10
3408200	210	200	GA	M10	284	254	132	25 x 3.0	5

KA = Plastic drain pipe, GA = cast iron drain pipe

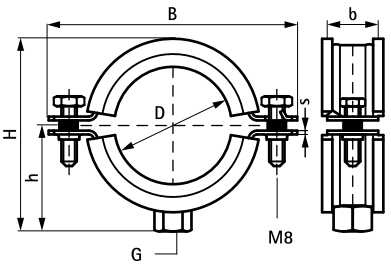

BIS Rubber Profile

(A 35 05)

noise insulation clamp lining



Features and Benefits

- extruded profile
- to make noise insulating clamp lining
- material: EPDM rubber, black
- chlorine free and resistant to ageing
- resistant to ozone, UV, weather and sea water
- shore A hardness 45 ±5
- temperature resistance from -30 °C to +110 °C
- sound insulating lining according DIN 4109

Part No.	L	B (mm)	H (mm)	h (mm)	b x s (mm)	Pack 1	App.
0840204	180 m	26	8.0	4.0	20.0 x 4.0	180	m.
0840254	140 m	31	8.5	4.0	25.0 x 4.0	140	m.
0840304	120 m	47	10.5	4.0	30.0 x 4.0	120	m.
Other profiles and dimensions available on request.							

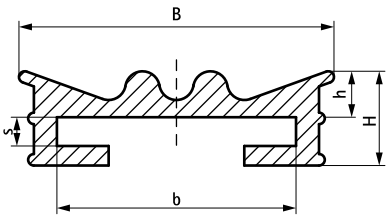

EN-SG 02/2022- Subject to modifications

BIS Rubber Moulding Part

(A 35 10)

noise insulation clamp lining 15 - 22 mm



Features and Benefits

- injection moulding piece
- to make noise insulating clamp lining
- material: PVC (polyvinylchloride), transparent
- sound insulating lining according DIN 4109

Part No.	D (mm)	D (")	DN	Colour	Pack 1	Pack 2
0840051	15	-	-	Transparent	100	-
0840052	22	½	15	Transparent	100	-

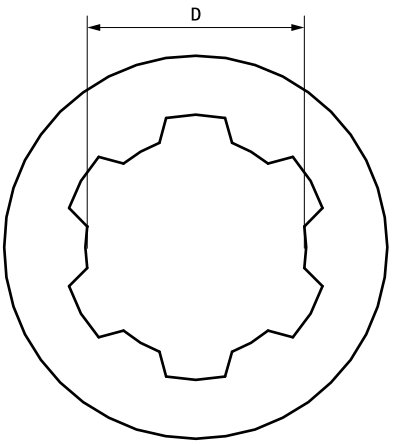

BIS Silicone Profile

(A 35 15)

heat-resistant noise insulation clamp lining



Features and Benefits

- extruded profile
- to make noise insulating, heat resistant clamp lining
- material: silicon rubber, reddish brown
- chlorine free and resistant to ageing
- resistant to ozone, UV, weather and sea water
- shore A hardness 45 ±5
- temperature resistance from -30 °C to +210 °C
- sound insulating lining according DIN 4109

Part No.	L	B (mm)	H (mm)	h (mm)	b x s (mm)	Pack 1	App.
0845205	50 m	25.0	7.5	4.0	20 x 1.5	50	m.
0846205	100 m	25.0	7.5	4.0	20 x 1.5	100	m.
0845255	50 m	30.0	9.5	5.5	25 x 2.0	50	m.
0845304	50 m	35.4	8.7	4.0	30 x 3.0	50	m.
0845408	50 m	44.0	14.0	8.0	40 x 4.0	50	m.
0845506	50 m	57.0	14.0	7.0	52 x 4.5	50	m.

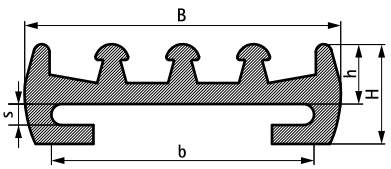

EN-SG 02/2022- Subject to modifications

B BIS Metal Pipe Clamps



BIS Clamps

Bifix® G2 (M8/10) (BUP1000) 42
2S Clamp (M8) 43
2S Clamp (M8/10) 44



BIS Industrial Clamps

BIS Heavy Duty Clamp HD500 (M8/10, M10/12) (BUP1000) 45
BIS Heavy Duty Clamp HD500 (M16) (BUP1000) 46
BIS Heavy Duty Clamp HD500 (1/2") (BUP1000) 47
BIS Heavy Duty Clamp HD500 (1") (BUP1000) 49



BIS Sprinkler Clamps

BIS Sprinkler Clamp HD500 (BUP1000) 50



BIS Industrial Saddles

BIS Split Band Clip DIN 3567 51
BIS Split Band Clip DIN 3567 (hdg) 52



BIS Double Clamps

BIS Duplo Double Clamp 53
BIS Double Wall Clamp 54



BIS Nail-in Clamps

BIS Nail-in Clamp 55
BIS Pipe Hook 56



BIS Light Duty Clamps and Saddles

BIS Pipe Clip (zp) 57
BIS Pipe Saddle (Copper) 58
BIS Decorative Pipe Clamp (Brass) 59



BIS Clamps for Plastic Pipe

BIS 4000 (BUP1000) 60
BIS 4000 (zp) 61
BIS 3000 (zp) 62
BIS Lining 3000 Clamp 63
BIS 434 Clamp for PE-Pipe 64
BIS Metal Liner 434 Clamp 65
BIS Lining 434 Clamp 66



BIS Clamps for Rain Water Pipe

BIS Hinged Pipe Clamp 400 (Round) 67
BIS Hinged Pipe Clamp 400 (Square) 68



BIS Foundation Clamp

BIS Funderingsbeugel 69
BIS Combibeugel 70
BIS Fixeringskap 71
BIS Klemschuif 72
BIS Funderingshaak 73

EN-SG 02/2022- Subject to modifications

Bifix® G2 (M8/10) (BUP1000)

(B 05 04)

for insulated pipe, steel, copper, cast iron and plastic (multilayer) pipe 10 - 225 mm

M8/10



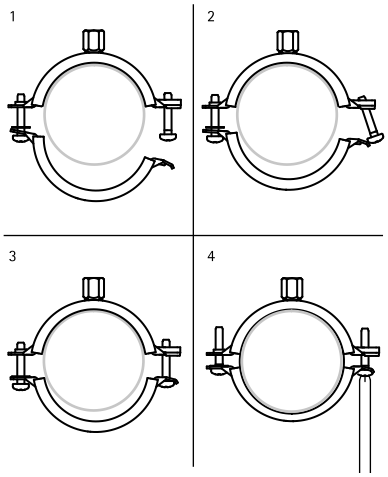

Features and Benefits

- two-screw clamp
- with quick locking system
- perfect solution for pipe supports, also for outdoor installations
- material: steel
- surface protection:
  - product is part of the BIS UltraProtect® 1000 system
  - suitable for in- and outdoor applications
  - stands min. 1,000 hours salt spray test (max. 5% red rust) according to ISO 9227

Part No.	D (mm)	D (")	DN	G	B (mm)	H (mm)	h (mm)	b x s (mm)	$F_{a,z}$ (N)	Pack 1
3008014	10 - 14	¼	8	M8/10	52	35	26	20 x 1.25	1,200	50
3008019	15 - 19	⅜	10	M8/10	59	42	29	20 x 1.25	1,200	50
3008023	20 - 23	½	15	M8/10	63	46	31	20 x 1.25	1,200	50
3008028	25 - 28	¾	20	M8/10	68	51	33	20 x 1.25	1,200	50
3008035	31 - 35	1	25	M8/10	74	57	36	20 x 1.25	1,200	50
3008039	36 - 39	-	-	M8/10	80	63	40	20 x 1.25	1,200	50
3008045	40 - 45	1¼	32	M8/10	84	67	41	20 x 1.25	1,200	50
3008052	48 - 52	1½	40	M8/10	91	74	45	20 x 1.25	1,200	50
3008058	54 - 58	-	-	M8/10	97	80	48	20 x 1.25	1,200	50
3008064	60 - 64	2	50	M8/10	104	87	51	20 x 1.25	1,200	50
3008070	66 - 70	-	-	M8/10	110	92	54	20 x 1.50	1,200	50
3008079	75 - 79	2½	65	M8/10	118	100	58	20 x 1.50	1,300	50
3008083	80 - 83	-	-	M8/10	125	108	62	20 x 1.50	1,300	50
3008091	88 - 91	3	80	M8/10	133	114	66	23 x 2.00	1,800	50
3008105	100 - 105	-	-	M8/10	147	123	73	23 x 2.00	1,800	50
3008115	108 - 115	4	100	M8/10	155	137	77	23 x 2.00	1,800	25
3008130	125 - 130	-	-	M8/10	172	145	85	23 x 2.00	1,800	25
3008140	133 - 140	5	125	M8/10	180	162	89	23 x 2.00	1,800	25
3008160	152 - 160	-	-	M8/10	201	171	100	23 x 2.00	1,800	25
3008169	165 - 169	6	150	M8/10	217	190	107	25 x 2.50	3,600	25
3008180	176 - 180	-	-	M8/10	229	203	113	25 x 2.50	3,600	15
3008200	192 - 200	-	-	M8/10	248	209	123	25 x 2.50	3,600	15
3008210	205 - 210	-	-	M8/10	261	238	129	25 x 2.50	3,600	15
3008225	219 - 225	8	200	M8/10	275	249	136	25 x 2.50	3,600	15

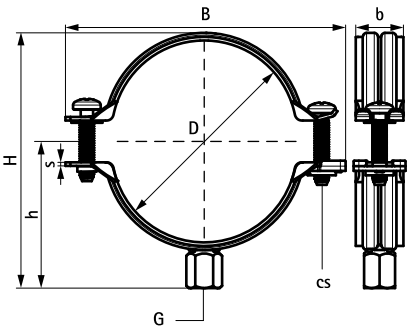

EN-SG 02/2022- Subject to modifications

2S Clamp (M8)

(B 05 23)

for insulated pipe, steel, copper, cast iron and plastic (multilayer) pipe 10 - 67 mm

M8



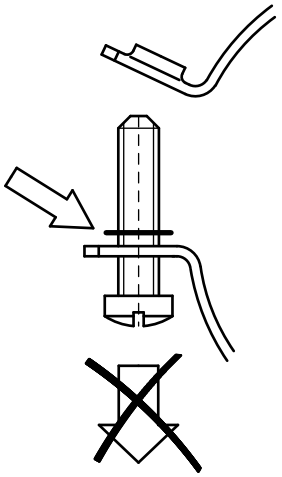

Features and Benefits

- gapless range
- anti loss washers prevent screws from falling out during installation
- perfect solution for insulated pipe supports
- material: steel
- zinc plated

Part No.	D (mm)	D (")	DN	G	B (mm)	H (mm)	h (mm)	b x s (mm)	cs	$F_{a,z}$ (N)	RAL	Pack 1
33025014	10 - 14	⅛ - ¼	6 - 8	M8	46	27	17	20 x 1.00	M5	700	RAL[1]	50
33025019	15 - 19	⅜	10	M8	51	32	20	20 x 1.00	M5	700	RAL[1]	50
33025024	20 - 24	½	15	M8	56	37	22	20 x 1.00	M5	700	RAL[1]	50
33025030	25 - 30	¾	20	M8	62	43	25	20 x 1.00	M5	700	RAL[1]	50
33025037	31 - 37	1	25	M8	69	50	29	20 x 1.00	M5	700	RAL[1]	50
33025046	38 - 46	1¼	32	M8	78	60	34	20 x 1.25	M5	950	RAL[1]	50
33025052	47 - 52	1½	40	M8	84	66	37	20 x 1.25	M5	950	RAL[1]	50
33025061	53 - 61	2	50	M8	93	75	41	20 x 1.25	M5	950	RAL[1]	50
33025067	62 - 67	-	-	M8	99	81	44	20 x 1.25	M5	950	RAL[1]	50

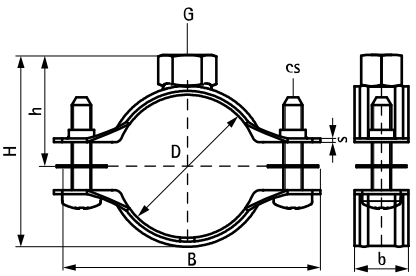

2S Clamp (M8/10)

(B 05 24)

for insulated pipe, steel, copper, cast iron and plastic (multilayer) pipe 10 - 225 mm

M8/10



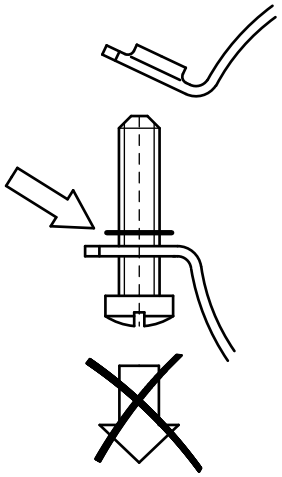

Features and Benefits

- gapless range
- anti loss washers prevent screws from falling out during installation
- perfect solution for insulated pipe supports
- material: steel
- zinc plated

Part No.	D (mm)	D (")	DN	G	B (mm)	H (mm)	h (mm)	b x s (mm)	cs	$F_{a,z}$ (N)	RAL	Pack 1
33035014	10 - 14	1/8 - 1/4	6 - 8	M8/10	46	35	25	20 x 1.00	M5	700	RAL[1]	50
33035019	15 - 19	3/8	10	M8/10	51	40	28	20 x 1.00	M5	700	RAL[1]	50
33035024	20 - 24	1/2	15	M8/10	56	45	30	20 x 1.00	M5	700	RAL[1]	50
33035030	25 - 30	3/4	20	M8/10	62	51	33	20 x 1.00	M5	700	RAL[1]	50
33035037	31 - 37	1	25	M8/10	69	58	37	20 x 1.00	M5	700	RAL[1]	50
33035046	38 - 46	1 1/4	32	M8/10	78	68	42	20 x 1.25	M5	950	RAL[1]	50
33035052	47 - 52	1 1/2	40	M8/10	84	74	45	20 x 1.25	M5	950	RAL[1]	50
33035061	53 - 61	2	50	M8/10	93	83	49	20 x 1.25	M5	950	RAL[1]	50
33035067	62 - 67	-	-	M8/10	99	89	53	20 x 1.25	M5	950	RAL[1]	50
33035074	68 - 74	-	-	M8/10	111	96	56	20 x 1.50	M6	1,400	RAL[1]	50
33035081	75 - 81	2 1/2	65	M8/10	118	103	60	20 x 1.50	M6	1,400	RAL[1]	50
33035087	82 - 87	-	-	M8/10	124	109	63	20 x 1.50	M6	1,400	RAL[1]	50
33035095	88 - 95	3	80	M8/10	136	119	68	23 x 2.00	M6	2,000	RAL[1]	50
33035103	96 - 103	-	-	M8/10	143	127	72	23 x 2.00	M6	2,000	RAL[1]	50
33035112	104 - 112	-	-	M8/10	153	136	76	23 x 2.00	M6	2,000	RAL[1]	25
33035118	113 - 118	4	100	M8/10	159	142	79	23 x 2.00	M6	2,000	RAL[1]	25
33035127	119 - 127	-	-	M8/10	168	151	84	23 x 2.00	M6	2,000	RAL[1]	25
33035137	128 - 137	-	-	M8/10	178	161	89	23 x 2.00	M6	2,000	RAL[1]	25
33035144	138 - 144	5	125	M8/10	185	168	92	23 x 2.00	M6	2,000	RAL[1]	25
33035153	145 - 153	-	-	M8/10	194	177	97	23 x 2.00	M6	2,000	RAL[1]	25
33035162	154 - 162	-	-	M8/10	203	186	101	23 x 2.00	M6	2,000	RAL[1]	25
33035172	163 - 172	6	150	M8/10	217	199	109	25 x 2.50	M6	3,300	RAL[1]	25
33035183	173 - 183	-	-	M8/10	227	210	114	25 x 2.50	M6	3,300	RAL[1]	15
33035194	184 - 194	-	-	M8/10	239	221	120	25 x 2.50	M6	3,300	RAL[1]	15
33035205	195 - 205	-	-	M8/10	249	232	125	25 x 2.50	M6	3,300	RAL[1]	15
33035216	206 - 216	-	-	M8/10	260	243	130	25 x 2.50	M6	3,300	RAL[1]	15
33035225	217 - 225	8	200	M8/10	271	253	136	25 x 2.50	M6	3,300	RAL[1]	10

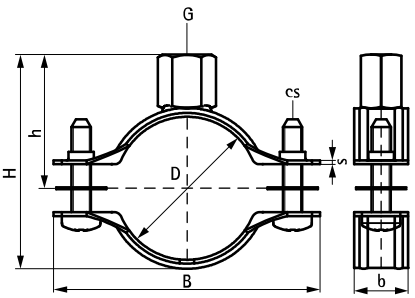

EN-SG 02/2022- Subject to modifications

BIS Heavy Duty Clamp HD500 (BUP1000)

(B 10 04)

for steel pipes 15 - 227 mm

M8/10 - M10/12



Features and Benefits

- two-part clamp with two locking bolts
- up to and including 5": locking nut is captive, hidden in plastic holder
- heavy design
- bolts secured with anti-loss washer
- with CO_2 welded connection nut
- material: steel
- tested for fire safety
- surface protection:
  - product is part of the BIS UltraProtect® 1000 system
  - suitable for in- and outdoor applications
  - stands min. 1,000 hours salt spray test (max. 5% red rust) according to ISO 9227
- also available: noise insulating lining of silicone rubber (reddish brown), heat resistant up to +200 °C (A 35 15)

RAL GÜTEZEICHEN ROHRBEFESTIGUNG
RAL-GZ 655/B
Cert.Nr. 2011-13a

RAL GÜTEZEICHEN BRANDGEPRÜFTE ROHRBEFESTIGUNG
RAL-GZ 656
Cert.Nr. 2011-05

Part No.	D (mm)	D (")	DN	G	B (mm)	H (mm)	h (mm)	b x s (mm)	cs	$F_{a,z}$ (N)	RAL	Pack 1
33038019	15 - 19	3/8	10	M8/10	75	46	32	30 x 2.5	M8	2,100	RAL[2]	25
33038023	19 - 23	1/2	15	M8/10	78	50	34	30 x 2.5	M8	2,100	RAL[2]	25
33038030	25 - 30	3/4	20	M8/10	84	57	38	30 x 2.5	M8	2,100	RAL[2]	25
33038036	31 - 36	1	25	M8/10	91	63	41	30 x 2.5	M8	2,100	RAL[2]	25
33038042	37 - 42	-	-	M8/10	98	69	44	30 x 2.5	M8	2,100	RAL[2]	25
33038045	40 - 45	1 1/4	32	M8/10	101	72	45	30 x 2.5	M8	2,100	RAL[2]	25
33038052	47 - 52	1 1/2	40	M8/10	109	79	49	30 x 2.5	M8	2,100	RAL[2]	25
33038058	53 - 58	-	-	M8/10	115	85	52	30 x 2.5	M8	2,100	RAL[2]	25
33038065	59 - 65	2	50	M8/10	122	92	55	30 x 2.5	M8	2,100	RAL[2]	25
33038071	66 - 71	-	-	M8/10	129	98	58	30 x 2.5	M8	2,100	RAL[2]	25
33048078	72 - 78	2 1/2	65	M10/12	136	115	70	30 x 3.0	M8	4,000	RAL[2]	25
33048085	79 - 85	-	-	M10/12	144	122	75	30 x 3.0	M8	4,000	RAL[2]	25
33048092	86 - 92	3	80	M10/12	152	129	78	30 x 3.0	M8	4,000	RAL[2]	25
33048106	98 - 106	-	-	M10/12	165	143	85	30 x 3.0	M8	4,000	RAL[2]	25
33048116	108 - 116	4	100	M10/12	175	153	90	30 x 3.0	M8	4,000	RAL[2]	25
33048123	116 - 123	-	-	M10/12	182	160	94	30 x 3.0	M8	4,000	RAL[2]	25
33048133	125 - 133	-	-	M10/12	193	170	99	30 x 3.0	M8	4,000	RAL[2]	25
33048140	132 - 140	5	125	M10/12	200	177	102	30 x 3.0	M8	4,000	RAL[2]	25
33048154	148 - 154	-	-	M10/12	215	191	109	30 x 3.0	M8	4,000	RAL[2]	15
33048169	159 - 169	6	150	M10/12	240	207	117	38 x 4.0	M10	8,200	RAL[2]	15
33048183	173 - 183	-	-	M10/12	254	221	124	38 x 4.0	M10	8,200	RAL[2]	15
33048202	192 - 202	-	-	M10/12	274	240	133	38 x 4.0	M10	8,200	RAL[2]	15
33048219	208 - 219	-	-	M10/12	290	256	141	38 x 4.0	M10	8,200	RAL[2]	15
33048227	217 - 227	8	200	M10/12	299	265	146	38 x 4.0	M10	8,200	RAL[2]	2

RAL[2] = tested, certified and monitored by a third party according to RAL-GZ 655/B and RAL-GZ 656. For detailed technical information about our RAL marked products, please see the RAL datasheet in our web catalogue.

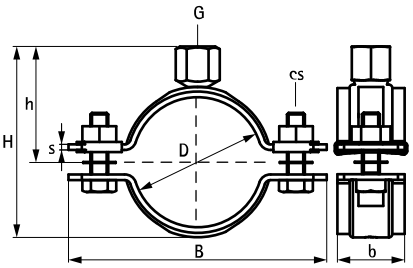

Complementary

201 BIS RapidStrut® Fixing System
375 BIS Fixing Accessories
469 BIS Fastenings

Complementary

40 BIS Silicone Profile
106 BIS dB-FiX® 80 Fixing Point Assembly

Alternative

25 BIS Heavy Duty Clamp HD1501 (BUP1000)

BIS Heavy Duty Clamp HD500 (BUP1000)

(B 10 06)

for steel pipes 159 - 509 mm

M16



Features and Benefits

- two-part clamp with two locking bolts
- heavy design
- bolts secured with anti-loss washer
- with CO_2 welded connection nut
- material: steel
- surface protection:
  - product is part of the BIS UltraProtect® 1000 system
  - suitable for in- and outdoor applications
  - stands min. 1,000 hours salt spray test (max. 5% red rust) according to ISO 9227
- also available: noise insulating lining of silicone rubber (reddish brown), heat resistant up to +200 °C (A 35 15)
- tested for fire safety

RAL GÜTEZEICHEN ROHRBEFESTIGUNG
RAL-GZ 655/B
Cert.Nr. 2011-13a

Part No.	D (mm)	D (")	DN	G	B (mm)	H (mm)	h (mm)	b x s (mm)	cs	$F_{a,z}$ (N)	RAL	Pack 1
33068169	159 - 169	6	150	M16	241	193	103	38 x 4.0	M10	8,200	RAL[1]	15
33068183	173 - 183	-	-	M16	255	207	110	38 x 4.0	M10	8,200	RAL[1]	15
33068202	192 - 202	-	-	M16	274	226	130	38 x 4.0	M10	8,200	RAL[1]	15
33068227	217 - 227	8	200	M16	299	263	144	38 x 4.0	M10	8,200	RAL[1]	2
33068241	229 - 241	-	-	M16	322	277	151	38 x 4.0	M12	8,200	RAL[1]	2
33068254	244 - 254	-	-	M16	335	290	158	38 x 4.0	M12	8,200	RAL[1]	2
33068264	254 - 264	-	-	M16	345	300	163	38 x 4.0	M12	8,200	RAL[1]	2
33068279	267 - 279	10	250	M16	360	315	170	38 x 4.0	M12	8,200	RAL[1]	2
33068289	279 - 289	-	-	M16	367	324	175	48 x 5.0	M12	12,000	RAL[1]	2
33068302	292 - 302	-	-	M16	380	337	181	48 x 5.0	M12	12,000	RAL[1]	2
33068325	315 - 325	12	300	M16	403	358	193	48 x 5.0	M12	12,000	RAL[1]	2
33068360	350 - 360	14	350	M16	439	395	210	48 x 5.0	M12	12,000	RAL[1]	2
33068374	364 - 374	-	-	M16	453	409	217	48 x 5.0	M12	12,000	RAL[1]	2
33068389	379 - 389	-	-	M16	468	424	225	48 x 5.0	M12	12,000	RAL[1]	2
33068408	398 - 408	16	400	M16	487	443	234	48 x 5.0	M12	12,000	RAL[1]	2
33068418	408 - 418	-	-	M16	498	441	227	48 x 5.0	M12	12,000	RAL[1]	2
33068436	424 - 436	-	-	M16	515	471	248	48 x 5.0	M12	12,000	RAL[1]	2
33068458	448 - 458	18	450	M16	537	493	259	48 x 5.0	M12	12,000	RAL[1]	2
33068509	499 - 509	20	500	M16	588	544	285	48 x 5.0	M12	12,000	RAL[1]	2

RAL[1] = tested, certified and monitored by a third party according to RAL-GZ 655/B.
For detailed technical information about our RAL marked products, please see the RAL datasheet in our web catalogue.

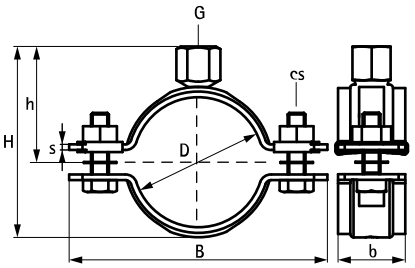

Complementary
201 BIS RapidStrut® Fixing System
375 BIS Fixing Accessories
469 BIS Fastenings

Complementary
40 BIS Silicone Profile

Alternative
26 BIS Heavy Duty Clamp HD1501 (BUP1000)

EN-SG 02/2022- Subject to modifications

BIS Heavy Duty Clamp HD500 (BUP1000)

(B 10 09)

for steel pipes 15 - 564 mm

G1½"



Features and Benefits

- two-part clamp with two locking bolts
- up to and including 5": locking nut is captive, hidden in plastic holder
- heavy design
- bolts secured with anti-loss washer
- with CO_2 welded connection nut
- material: steel
- tested for fire safety
- surface protection:
  - product is part of the BIS UltraProtect® 1000 system
  - suitable for in- and outdoor applications
  - stands min. 1,000 hours salt spray test (max. 5% red rust) according to ISO 9227

RAL-GZ 655/B
Cert.Nr. 2011-13a

RAL-GZ 656
Cert.Nr. 2011-05

Part No.	D (mm)	D (")	DN	G	B (mm)	H (mm)	h (mm)	b x s (mm)	cs	$F_{a,z}$ (N)	RAL	Pack 1
33078019	15 - 19	⅜	10	G½"	75	43	29	30 x 2.5	M8	2,100	RAL[2]	25
33078023	19 - 23	½	15	G½"	78	47	31	30 x 2.5	M8	2,100	RAL[2]	25
33078030	25 - 30	¾	20	G½"	84	54	35	30 x 2.5	M8	2,100	RAL[2]	25
33078036	31 - 36	1	25	G½"	91	60	38	30 x 2.5	M8	2,100	RAL[2]	25
33078042	37 - 42	-	-	G½"	98	66	40	30 x 2.5	M8	2,100	RAL[2]	25
33078045	40 - 45	1¼	32	G½"	101	69	42	30 x 2.5	M8	2,100	RAL[2]	25
33078052	47 - 52	1½	40	G½"	109	76	46	30 x 2.5	M8	2,100	RAL[2]	25
33078058	53 - 58	-	-	G½"	115	82	48	30 x 2.5	M8	2,100	RAL[2]	25
33078065	59 - 65	2	50	G½"	122	89	52	30 x 2.5	M8	2,100	RAL[2]	25
33078071	66 - 71	-	-	G½"	129	95	55	30 x 2.5	M8	2,100	RAL[2]	25
33078078	72 - 78	2½	65	G½"	136	103	59	30 x 3.0	M8	4,000	RAL[2]	25
33078085	79 - 85	-	-	G½"	144	110	63	30 x 3.0	M8	4,000	RAL[2]	25
33078092	86 - 92	3	80	G½"	152	117	66	30 x 3.0	M8	4,000	RAL[2]	25
33078106	98 - 106	-	-	G½"	165	131	73	30 x 3.0	M8	4,000	RAL[2]	25
33078116	108 - 116	4	100	G½"	175	141	78	30 x 3.0	M8	4,000	RAL[2]	25
33078133	125 - 133	-	-	G½"	193	158	87	30 x 3.0	M8	4,000	RAL[2]	25
33078140	132 - 140	5	125	G½"	200	165	90	30 x 3.0	M8	4,000	RAL[2]	25
33078154	148 - 154	-	-	G½"	215	179	97	30 x 3.0	M8	4,000	RAL[2]	15
33078183	173 - 183	-	-	G½"	254	209	112	38 x 4.0	M10	8,200	RAL[2]	15
33078202	192 - 202	-	-	G½"	274	228	122	38 x 4.0	M10	8,200	RAL[2]	15
33078219	208 - 219	-	-	G½"	290	244	130	38 x 4.0	M10	8,200	RAL[2]	15
33078227	217 - 227	8	200	G½"	299	253	134	38 x 4.0	M10	8,200	RAL[2]	2
33078254	244 - 254	-	-	G½"	335	280	148	38 x 4.0	M12	8,200	RAL[1]	2
33078279	267 - 279	10	250	G½"	360	305	160	38 x 4.0	M12	8,200	RAL[1]	2
33078289	279 - 289	-	-	G½"	367	314	165	48 x 5.0	M12	12,000	RAL[1]	2
33078325	315 - 325	12	300	G½"	403	348	183	48 x 5.0	M12	12,000	RAL[1]	2
33078360	350 - 360	-	-	G½"	439	385	200	48 x 5.0	M12	12,000	RAL[1]	2
33078408	398 - 408	16	400	G½"	487	433	224	48 x 5.0	M12	12,000	RAL[1]	2
33078436	424 - 436	-	-	G½"	515	461	238	48 x 5.0	M12	12,000	RAL[1]	2
33078458	448 - 458	18	450	G½"	537	483	249	48 x 5.0	M12	12,000	RAL[1]	2
33078509	499 - 509	20	500	G½"	588	534	275	48 x 5.0	M12	12,000	RAL[1]	2
33078564	554 - 564	-	-	G½"	643	589	302	48 x 5.0	M12	12,000	RAL[1]	2

RAL[1] = tested, certified and monitored by a third party according to RAL-GZ 655/B.
RAL[2] = tested, certified and monitored by a third party according to RAL-GZ 655/B and RAL-GZ 656.
For detailed technical information about our RAL marked products, please see the RAL datasheet in our web catalogue.

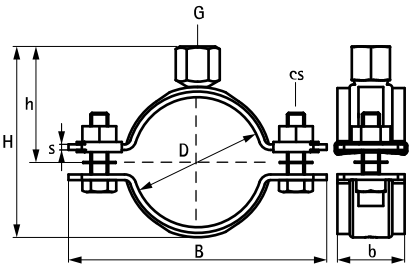

Complementary

201 BIS RapidStrut® Fixing System
375 BIS Fixing Accessories
469 BIS Fastenings

Complementary

40 BIS Silicone Profile
450 BIS Threaded Tube

Alternative

27 BIS Heavy Duty Clamp HD1501 (BUP1000)

RAL Information BIS HD500

Max. allowed load (Fa,z) according to RAL-GZ 655/B and RAL-GZ 656

				RAL GÜTEZEICHEN ROHRBEFESTIGUNG	RAL GÜTEZEICHEN BRANDGEPRÜFTE ROHRBEFESTIGUNG							
				Cert. No. 2011-13a	Cert. No. 2011-05							
				RAL-GZ 655/B	RAL-GZ 656							
				F0	F30		F60		F90		F120	
Part No.	Ø (mm)	Connec-tion nut	Cata-logue page	Fa,z (N)	Fa,z (N)	Defor-mation (mm)	Fa,z (N)	Defor-mation (mm)	Fa,z (N)	Defor-mation (mm)	Fa,z (N)	Defor-mation (mm)
3303 8 0XX	15 - 71	M8/10	B 10 04	2,100	940	30	380	61	-	-	-	-
3304 8 XXX	72 - 154	M10/12	B 10 04	4,000	1,980	41	910	83	-	-	-	-
3304 8 XXX	159 - 227	M10/12	B 10 04	8,200	1,850	70	1,310	78	-	-	-	-
3306 8 XXX	159 - 279	M16	B 10 06	8,200	1,850*	70*	1,310*	78*	-	-	-	-
3306 8 XXX	279 - 509	M16	B 10 06	12,000	-	-	-	-	-	-	-	-
3307 8 XXX	15 - 71	G½"	B 10 09	2,100	940	30	380	61	-	-	-	-
3307 8 XXX	72 - 154	G½"	B 10 09	4,000	1,980	41	910	83	-	-	-	-
3307 8 XXX	159 - 279	G½"	B 10 09	8,000	1,850*	70*	1,310*	78*	-	-	-	-
3307 8 XXX	279 - 509	G½"	B 10 09	12,000	-	-	-	-	-	-	-	-

* up to 227 mm.

The max. allowed load (Fa,z) according to RAL-GZ 655/B is calculated using specific statistical methods related to the breaking load and taking into account a deflection of 1,5 mm or 2% of the maximum nominal clamp diameter.

According to the RAL requirements, the test results from above mentioned RAL certified articles are monitored by an independent test institute.

EN-SG 02/2022- Subject to modifications

BIS Heavy Duty Clamp HD500 (BUP1000)

(B 10 19)

for steel pipes 159 - 564 mm

G1"



Features and Benefits

- two-part clamp with two locking bolts
- heavy design
- bolts secured with anti-loss washer
- with CO_2 welded connection nut
- material: steel
- surface protection:
  - product is part of the BIS UltraProtect® 1000 system
  - suitable for in- and outdoor applications
  - stands min. 1,000 hours salt spray test (max. 5% red rust) according to ISO 9227
- also available: noise insulating lining of silicone rubber (reddish brown), heat resistant up to +200 °C (A 35 15)

Part No.	D (mm)	D (")	DN	G	B (mm)	H (mm)	b x s (mm)	cs	$F_{a,z}$ (N)	Pack 1
33088169	159 - 169	6	-	G1"	241	200	38 x 4.0	M10	8,200	15
33088183	173 - 183	-	-	G1"	255	214	38 x 4.0	M10	8,200	15
33088202	192 - 202	-	-	G1"	274	233	38 x 4.0	M10	8,200	15
33088227	217 - 227	8	200	G1"	299	258	38 x 4.0	M10	8,200	2
33088254	244 - 254	-	-	G1"	335	258	38 x 4.0	M12	8,200	2
33088289	279 - 289	10	-	G1"	368	319	48 x 5.0	M12	12,000	2
33088325	315 - 325	12	300	G1"	404	355	48 x 5.0	M12	12,000	2
33088360	350 - 360	14	350	G1"	440	390	48 x 5.0	M12	12,000	2
33088408	398 - 408	16	400	G1"	488	438	48 x 5.0	M12	12,000	2
33088458	448 - 458	18	450	G1"	538	488	48 x 5.0	M12	12,000	2
33088509	499 - 509	20	500	G1"	589	539	48 x 5.0	M12	12,000	2
33088564	554 - 564	-	-	G1"	644	594	48 x 5.0	M12	12,000	2

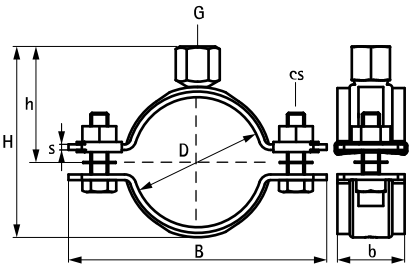

Complementary

201 BIS RapidStrut® Fixing System
375 BIS Fixing Accessories
469 BIS Fastenings

Complementary

40 BIS Silicone Profile
450 BIS Threaded Tube

EN-SG 02/2022- Subject to modifications

BIS Sprinkler Clamp HD500 (BUP1000)

(B 12 05)

for sprinkler pipes 19 - 219 mm

M8 - M10 - M12 - M16



Features and Benefits

- two-part clamp with two locking bolts
- up to and including 5": locking nut is captive, hidden in plastic holder
- heavy design
- bolts secured with anti-loss washer
- with CO_2 welded connection nut
- material: steel
- surface protection:
  - product is part of the BIS UltraProtect® 1000 system
  - suitable for in- and outdoor applications
  - stands min. 1,000 hours salt spray test (max. 5% red rust) according to ISO 9227
- with VdS approval - certificate number G 4060019

VdS
Cert.Nr.
G 4060019

Part No.	D (mm)	D (")	DN	G	B (mm)	H (mm)	h (mm)	b x s (mm)	cs	$F_{a,z}$ (N)	VdS	Pack 1
4503023	19 - 23	½	15	M8/10	78.5	50.0	34.0	30 x 2.5	M8	2,700	VdS	25
4503027	25 - 30	¾	20	M8/10	85.0	57.0	37.5	30 x 2.5	M8	2,700	VdS	25
4503033	31 - 36	1	25	M8/10	90.5	63.0	40.5	30 x 2.5	M8	2,700	VdS	25
4503038	37 - 42	-	-	M8/10	97.6	69.0	43.5	30 x 2.5	M8	2,700	VdS	25
4503042	40 - 45	1¼	32	M8/10	101.7	71.0	45.0	30 x 2.5	M8	2,700	VdS	25
4503048	47 - 52	1½	40	M8/10	108.8	78.0	48.5	30 x 2.5	M8	2,700	VdS	25
4503058	53 - 58	-	-	M8/10	114.0	84.0	51.5	30 x 2.5	M8	2,700	VdS	25
4503060	59 - 65	2	50	M8/10	120.8	89.5	55.0	30 x 2.5	M8	2,700	VdS	25
4503076	72 - 78	2½	65	M10/12	137.0	112.0	71.0	30 x 3.0	M8	5,000	VdS	25
4503085	79 - 85	-	-	M10/12	144.1	119.0	74.5	30 x 3.0	M8	5,000	VdS	25
4503089	86 - 92	3	80	M10/12	151.1	126.0	78.0	30 x 3.0	M8	5,000	VdS	25
4503106	98 - 106	-	-	M10/12	164.8	141.5	85.0	30 x 3.0	M8	5,000	VdS	25
4503114	108 - 116	4	100	M10/12	174.8	151.0	90.0	30 x 3.0	M8	5,000	VdS	25
4503139	132 - 140	5	125	M12	199.0	164.0	93.0	30 x 3.0	M8	5,000	VdS	25
4503168	159 - 169	6	150	M12	240.5	192.0	105.0	38 x 4.0	M10	5,800	VdS	15
4503183	173 - 183	-	-	M12	254.6	204.0	110.0	38 x 4.0	M10	5,800	VdS	15
4503202	192 - 202	-	-	M12	273.7	222.5	119.5	38 x 4.0	M10	5,800	VdS	15
4503219	208 - 219	8	200	M16	290.8	249.0	134.0	38 x 4.0	M10	5,800	VdS	15

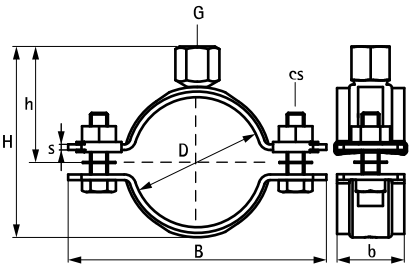

Complementary

396 BIS Beam Clamp Model C
403 BIS Roofing Sheet Hanger VdS

EN-SG 02/2022- Subject to modifications

BIS Split Band Clip DIN 3567

(B 15 10)

20 - 324 mm



Features and Benefits

- two equal clamp halfparts
- material: steel 1.0332
- no treatment

Part No.	D (mm)	B (mm)	s (mm)	d1 (mm)	k (mm)	k1 (mm)	Pack 1
4620020	20	30	5.0	11.5	57	7	1
4620022	22	30	5.0	11.5	59	7	1
4620025	25	30	5.0	11.5	62	7	1
4620027	27	30	5.0	11.5	66	7	1
4620030	30	30	5.0	11.5	68	7	10
4620034	34	30	5.0	11.5	72	7	1
4620038	38	30	5.0	11.5	76	7	1
4620043	43	30	5.0	11.5	82	7	1
4620045	45	30	5.0	11.5	84	7	1
4620049	49	30	5.0	11.5	88	7	10
4620057	57	40	6.0	14.0	104	9	1
4620061	61	40	6.0	14.0	108	9	1
4620077	77	40	6.0	14.0	122	9	1
4620089	89	40	6.0	14.0	136	9	1
4620108	108	50	8.0	18.0	172	11	1
4620115	115	50	8.0	18.0	178	11	1
4620133	133	50	8.0	18.0	196	11	1
4620140	140	50	8.0	18.0	204	11	1
4620159	159	50	8.0	18.0	222	11	1
4620169	169	50	8.0	18.0	232	11	1
4620194	194	50	8.0	18.0	258	11	1
4620216	216	50	8.0	18.0	280	11	1
4620220	220	50	8.0	18.0	284	11	1
4620267	267	60	8.0	23.0	342	14	1
4620273	273	60	8.0	23.0	348	14	1
4620318	318	60	8.0	23.0	392	14	1
4620324	324	60	8.0	23.0	398	14	1

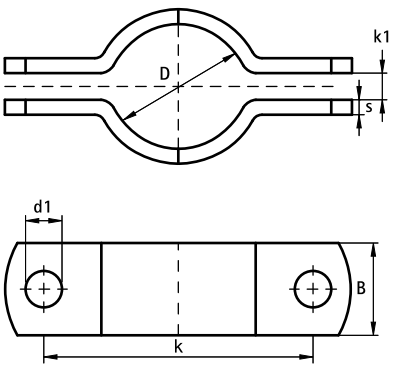

EN-SG 02/2022- Subject to modifications

BIS Split Band Clip DIN 3567 (hdg)

(B 15 15)

20 - 324 mm



Features and Benefits

- two equal clamp halfparts
- material: steel 1.0332
- hot dip galvanized

Part No.	D (mm)	B (mm)	s (mm)	d1 (mm)	k (mm)	k1 (mm)	Pack 1
4621020	20	30	5.0	11.5	57	7	1
4621022	22	30	5.0	11.5	59	7	1
4621027	27	30	5.0	11.5	66	7	1
4621030	30	30	5.0	11.5	68	7	1
4621034	34	30	5.0	11.5	72	7	1
4621038	38	30	5.0	11.5	76	7	1
4621043	43	30	5.0	11.5	82	7	1
4621045	45	30	5.0	11.5	84	7	1
4621049	49	30	5.0	11.5	88	7	1
4621057	57	40	6.0	14.0	104	9	1
4621061	61	40	6.0	14.0	108	9	1
4621077	77	40	6.0	14.0	122	9	1
4621089	89	40	6.0	14.0	136	9	1
4621108	108	50	8.0	18.0	172	11	1
4621115	115	50	8.0	18.0	178	11	1
4621133	133	50	8.0	18.0	196	11	1
4621140	140	50	8.0	18.0	204	11	1
4621159	159	50	8.0	18.0	222	11	1
4621169	169	50	8.0	18.0	232	11	1
4621220	220	50	8.0	18.0	284	11	1
4621273	273	60	8.0	23.0	348	14	1
4621324	324	60	8.0	23.0	398	14	1

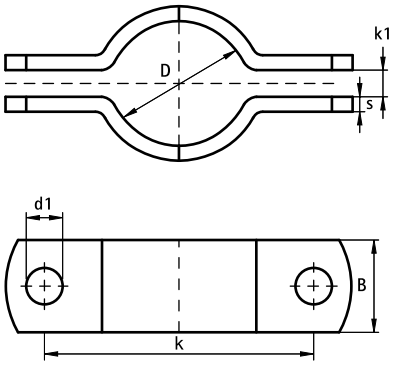

EN-SG 02/2022- Subject to modifications

BIS Duplo Double Clamp

(B 20 05)

for steel heating pipes 15.0 - 33.7 mm



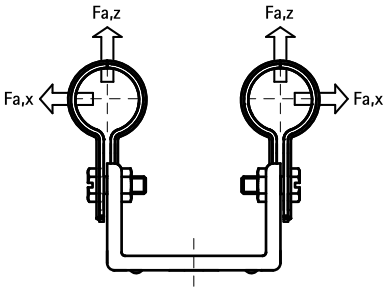

Features and Benefits

- two clamps on connection bracket
- for fixing of two pipes
- space saving
- two parts of the clamp interlock
- bracket reinforced for extra strength
- tube insulation can easily be fitted
- adjustable distance between pipe and wall
- material: steel
- pre-galvanized

Part No.	D (mm)	D (")	DN	B (mm)	b (mm)	s (mm)	d1 (mm)	k (mm)	H1 (mm)	h1 (mm)	$F_{a,z}$ (N)	$F_{a,x}$ (N)	Pack 1
3205015	15.0	-	-	79	20	1.5	8.5 x 15	60	58 - 74	48 - 64	100	200	50
3205022	22.0	½	15	89	20	1.5	8.5 x 15	60	65 - 81	51 - 67	100	200	50
3205028	28.0	¾	20	93	20	2.0	8.5 x 15	60	52 - 68	68 - 84	110	330	25
3205033	33.7	1	25	98	20	2.0	8.5 x 15	60	78 - 94	57 - 73	110	330	25

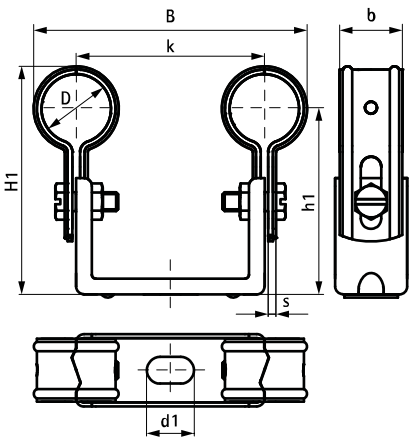

Complementary

588 BIS Under Floor / Radiator Brackets

Alternative

29 BIS Duplo Double Clamp with Lining

100 BIS Duplo KS

BIS Double Wall Clamp

(B 20 15)

for steel heating pipes 15 - 28 mm



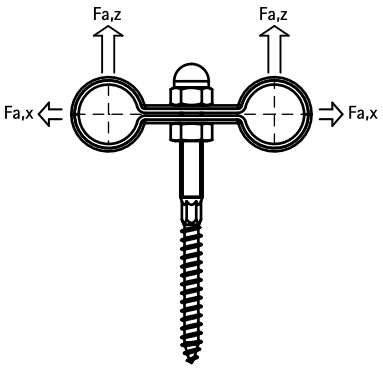

Features and Benefits

- for fixing of two pipes
- two parts of the clamp interlock
- bolt-wood screw with shoulder, making a lock nut unnecessary
- pre-galvanized
- material: steel

Part No.	D (mm)	D (")	DN	B (mm)	H (mm)	PL (mm)	$F_{a,z}$ (N)	$F_{a,x}$ (N)	Pack 1
3505015	15	-	-	80	100	90	230	200	50
3505022	22	½	15	87	104	90	230	200	50
3505028	28	¾	20	93	107	90	230	330	50
3515015	15	-	-	80	120	110	230	200	25
3515022	22	½	15	87	124	110	230	200	25
3515028	28	¾	20	93	127	110	230	330	25

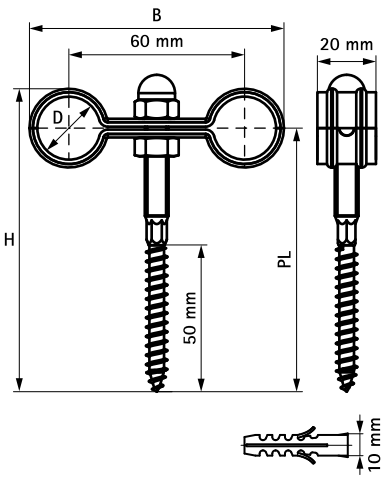

Alternative

30 BIS Double Wall Clamp with Lining
53 BIS Duplo Double Clamp

EN-SG 02/2022- Subject to modifications

BIS Nail-in Clamp

(B 25 05)



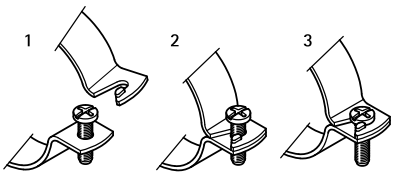

Features and Benefits

- two-screw clamp on hammer-in stud
- clamp with quick locking system
- type ST: for gas-pipe and conduit-pipe
- type KA: for plastic pipe
- material: steel
- zinc plated

Part No.	D (")	DN	Type	B (mm)	H (mm)	s (mm)	PL (mm)	HØ (mm)	Pack 1
3861021	-	15	ST	55	109	1.15	80	5	100
3861027	¾	20	ST	63	116	1.15	80	5	100
3861033	1	25	ST	66	120	1.15	80	5	100
3861043	1¼	32	ST	75	131	1.15	80	6	50
3861061	2	50	ST	97	152	2.00	80	6	50
3862040	-	40	KA	72	129	2.00	80	6	100
3862050	-	50	KA	86	139	2.00	80	6	100
3862070	-	70	KA	116	183	1.50	100	6	50
3862100	-	100	KA	144	217	1.50	100	6	25

ST = gas-pipe and conduit-pipe
KA = Plastic drain pipe.
Type ST also available with stud 150 mm (Part No. 3871XXX).
Other dimensions up to DN 200 can be supplied quickly.

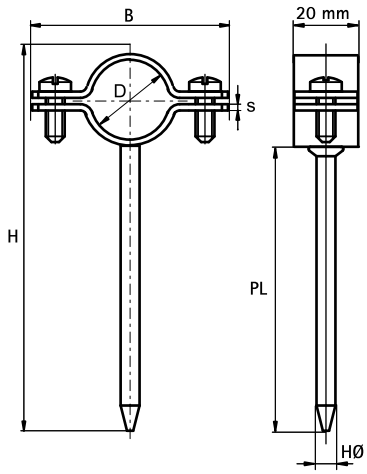

BIS Pipe Hook

(B 25 10)

for steel pipes 17 - 63 mm



Features and Benefits

- one-part hammer-in clamp
- material: steel

Part No.	D (mm)	D (")	DN	L	s (mm)	PL (mm)	ST	Pack 1	Pack 2
0860017	17	3/8	10	69 mm	2.0	59	self colour	100	1,000
0860021	21	1/2	15	80 mm	2.0	62	self colour	100	1,000
0860027	27	3/4	20	93 mm	2.0	75	self colour	100	1,000
0861017	17	3/8	10	69 mm	2.0	59	zinc plated	100	1,000
0861021	21	1/2	15	80 mm	2.0	62	zinc plated	100	1,000
0861027	27	3/4	20	93 mm	2.0	75	zinc plated	100	1,000
0861033	35	1	25	111 mm	2.0	90	zinc plated	100	1,000
0861043	44	1 1/4	32	125 mm	2.0	74	zinc plated	100	500
0861048	52	1 1/2	40	140 mm	3.5	77	zinc plated	100	500
0861061	63	2	50	152 mm	3.5	86	zinc plated	100	500

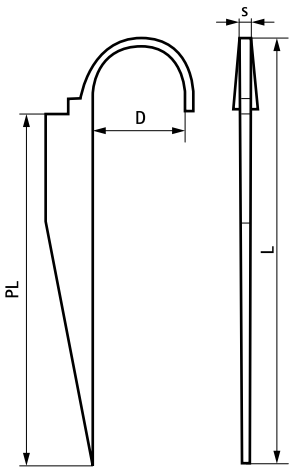

EN-SG 02/2022- Subject to modifications

BIS Pipe Clip (zp)

(B 30 44)

for cables, steel and PVC pipes 8 - 50 mm



Features and Benefits

- for diameters of more than 10 mm, the slotted hole allows to adjust small deviations of installations
- for cables, steel and PVC pipes
- 2 nerves
- material: steel
- zinc plated

Part No.	D (mm)	D (")	DN	B (mm)	H (mm)	b x s (mm)	d1 (mm)	k (mm)	$F_{a,z}$ (N)	Pack 1	Pack 2
0805108	8	-	-	26	6.5	15 x 0.8	Ø 6.5	13	300	100	4,000
0805110	10	1/8	6	28	8.5	15 x 0.8	Ø 6.5	14	300	100	2,000
0805112	12	1/4	8	30	10.5	15 x 0.8	Ø 6.5	15	300	100	2,000
0805115	15	-	-	33	13.5	15 x 0.8	Ø 6.5	17	300	100	2,000
0805116	16	3/8	10	35	14.5	15 x 0.8	Ø 6.5	18	300	100	2,000
0805118	18	-	-	37	16.5	15 x 0.8	Ø 6.5	37	300	100	1,000
0805120	20	1/2	15	40	18.5	15 x 1.2	Ø 6.5	20	300	100	1,000
0805122	22	-	-	42	21.0	15 x 1.2	Ø 6.5	22	300	100	1,000
0805125	25	-	-	45	24.5	15 x 1.2	Ø 6.5	22	300	100	1,000
0805126	26	3/4	20	46	25.0	15 x 1.2	Ø 6.5	24	300	100	1,000
0805132	32	1	25	53	30.0	15 x 1.2	Ø 6.5	27	300	100	1,200
0805140	40	-	-	62	39.0	18 x 1.2	8 x 6	30	300	50	500
0805150	50	1 1/2	40	74	49.0	18 x 1.2	8 x 6	38	300	50	500

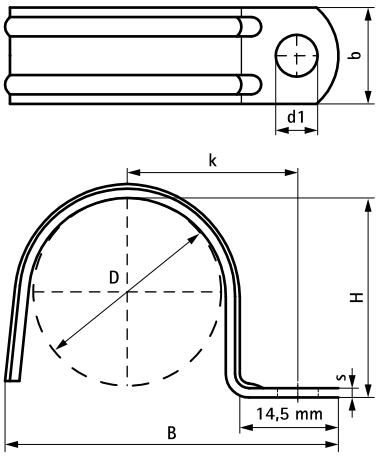

BIS Pipe Saddle (Copper)

(B 30 15)

for copper pipes 8 - 28 mm



Features and Benefits

- one-part saddle
- material: copper 2.0060

Part No.	D (mm)	B (mm)	H (mm)	k (mm)	$F_{a,z}$ (N)	Pack 1	Pack 2
4200008	8	34	9	22	1,500	100	500
4200010	10	38	11	26	25	100	500
4200012	12	40	13	28	50	100	500
4200015	15	43	16	31	65	100	500
4200018	18	46	18	34	80	100	500
4200022	22	50	23	38	100	100	500
4200028	28	56	29	44	150	100	500

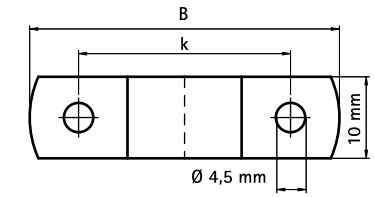

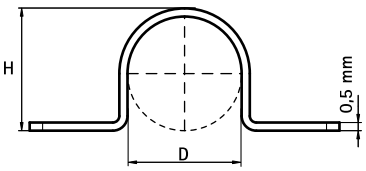

EN-SG 02/2022- Subject to modifications

BIS Decorative Pipe Clamp (Brass)

(B 30 35)

for copper pipes 12 - 35 mm

M6



Features and Benefits

- two-screw clamp
- material: brass

Part No.	D (mm)	G	B (mm)	H (mm)	h (mm)	$F_{a,z}$ (N)	Pack 1	Pack 2
0828012	12	M6	33	26	17	700	100	1,500
0828015	15	M6	36	30	20	700	100	1,000
0828022	22	M6	48	38	24	700	50	500
0828028	28	M6	56	46	29	700	50	400
0828035	35	M6	63	56	35	700	25	250

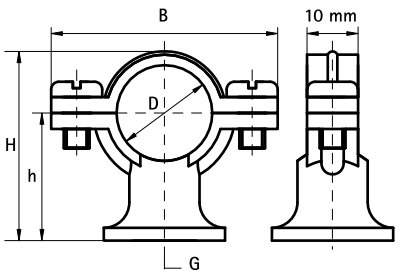

Alternative

77 starQuick® Clamp (Grey)

BIS 4000 (BUP1000)

(B 35 05)

for plastic pipes 32 - 200 mm

M8



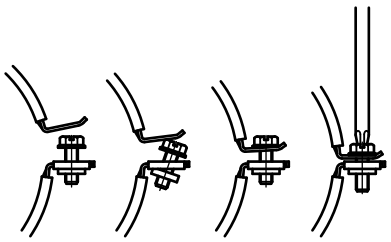

Features and Benefits

- two-screw clamp
- with quick locking system; will not open during installation
- with removable spacer washers, making the clamp suitable for either sliding or anchoring
- inside clamp diameter larger than outside pipe diameter for expansion or contraction of the pipe
- inside profile to protect pipes from damage
- material: steel 1.0332
- surface protection:
  - product is part of the BIS UltraProtect® 1000 system
  - suitable for in- and outdoor applications
  - stands min. 1,000 hours salt spray test (max. 5% red rust) according to ISO 9227

Part No.	D (mm)	DN	G	B (mm)	H (mm)	h (mm)	b x s (mm)	$F_{a,z}$ (N)	Pack 1
4448032	32	25	M8	76	54	34	20 x 1.5	910	50
4448040	40	32	M8	83	61	37	20 x 1.5	910	50
4448050	50	40	M8	95	71	41	20 x 1.5	910	50
4448056	56	50	M8	101	77	45	20 x 1.5	910	50
4448063	63	57	M8	108	84	49	20 x 1.5	910	50
4448070	70	-	M8	114	91	52	20 x 1.5	910	50
4448075	75	70	M8	119	96	55	20 x 1.5	910	50
4448080	80	-	M8	124	101	57	20 x 1.5	910	50
4448090	90	80	M8	134	111	62	20 x 1.5	910	50
4448100	100	-	M8	144	121	67	20 x 1.5	910	50
4448110	110	100	M8	158	132	73	23 x 2.0	2,200	25
4448125	125	125	M8	173	148	81	23 x 2.0	2,200	25
4448160	160	150	M8	208	184	99	23 x 2.0	2,200	25
4448200	200	200	M8	248	225	120	23 x 2.0	2,200	25

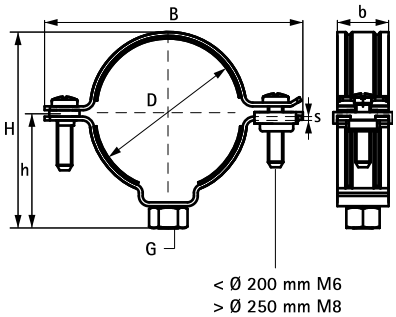

EN-SG 02/2022- Subject to modifications

BIS 4000 (zp)

(B 35 10)

for plastic pipes 32 - 200 mm

M8



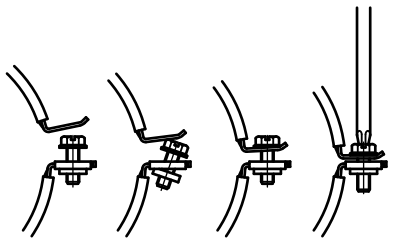

Features and Benefits

- two-screw clamp
- with quick locking system; will not open during installation
- with removable spacer washers, making the clamp suitable for either sliding or anchoring
- inside clamp diameter larger than outside pipe diameter for expansion or contraction of the pipe
- inside profile to protect pipes from damage
- material: steel 1.0332
- zinc plated

Part No.	D (mm)	DN	G	B (mm)	H (mm)	h (mm)	b x s (mm)	$F_{a,z}$ (N)	Pack 1
4443032	32	25	M8	76	54	34	20 x 1.5	910	50
4443040	40	32	M8	83	61	37	20 x 1.5	910	50
4443050	50	40	M8	95	71	41	20 x 1.5	910	50
4443056	56	50	M8	101	77	45	20 x 1.5	910	50
4443063	63	57	M8	108	84	49	20 x 1.5	910	50
4443070	70	-	M8	114	91	52	20 x 1.5	910	50
4443075	75	70	M8	119	96	55	20 x 1.5	910	50
4443080	80	-	M8	124	101	57	20 x 1.5	910	50
4443090	90	80	M8	134	111	62	20 x 1.5	910	50
4443100	100	-	M8	144	121	67	20 x 1.5	910	50
4443110	110	100	M8	158	132	73	23 x 2.0	2,200	25
4443125	125	125	M8	173	148	81	23 x 2.0	2,200	25
4443160	160	150	M8	208	184	99	23 x 2.0	2,200	25
4443200	200	200	M8	248	225	120	23 x 2.0	2,200	25

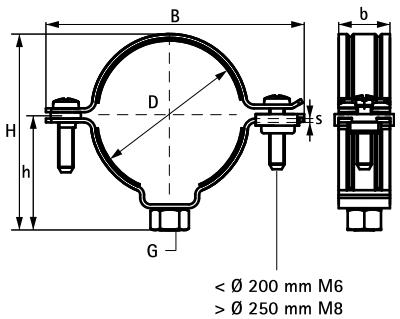

EN-SG 02/2022- Subject to modifications

BIS 3000 (zp)

(B 35 15)

for plastic pipes 32 - 200 mm

M6 - M8

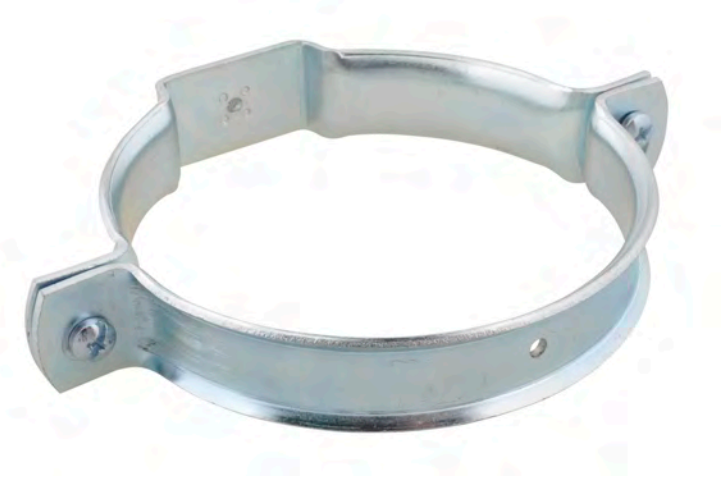

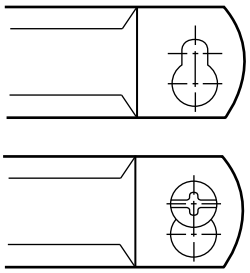

Features and Benefits

- two-screw clamp
- with 'keyhole closing'
- for rigid fixing point fastening it is necessary to use lining (Part No. 0814025)
- inside clamp diameter larger than outside pipe diameter for expansion or contraction of the pipe
- outside profile to protect pipes from damage
- material: steel
- zinc plated

Part No.	D (mm)	DN	G	B (mm)	H (mm)	h (mm)	b x s (mm)	$F_{a,z}$ (N)	Pack 1
0811032	32	25	M8	70	54	33	18 x 2.0	1,320	25
0811040	40	32	M8	82	67	40	20 x 2.0	1,320	25
0811050	50	40	M8	94	77	45	20 x 2.0	1,320	25
0811056	56	50	M8	102	81	46	20 x 2.0	1,320	50
0811063	63	57	M8	109	89	51	20 x 2.0	1,320	25
0811070	70	-	M8	116	92	51	20 x 2.0	1,320	50
0811075	75	70	M8	121	99	56	20 x 2.0	1,320	100
0811080	80	-	M8	131	103	57	20 x 2.0	1,320	50
0811090	90	80	M8	136	114	63	20 x 2.0	1,320	100
0811100	100	-	M8	146	124	68	20 x 2.0	1,320	50
0811110	110	100	M8	163	135	73	25 x 2.5	2,070	25
0811125	125	125	M8	178	149	80	25 x 2.5	2,070	25
0811140	140	-	M8	193	164	88	25 x 2.5	2,070	25
0811160	160	150	M8	213	184	98	25 x 2.5	2,070	25
0811180	180	-	M8	236	204	108	25 x 2.5	2,070	25
0811200	200	200	M8	256	224	118	25 x 2.5	2,070	25

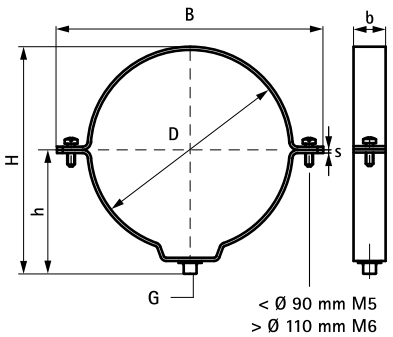

Complementary

375 BIS Fixing Accessories
469 BIS Fastenings
63 BIS Lining 3000 Clamp

Alternative

64 BIS 434 Clamp for PE-Pipe

EN-SG 02/2022- Subject to modifications

BIS Lining 3000 Clamp

(B 35 20)



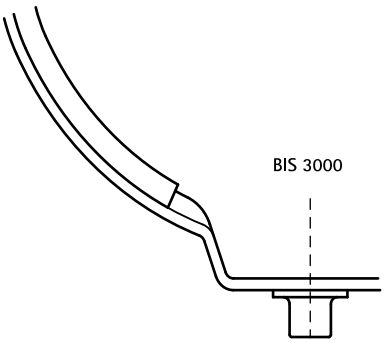

Features and Benefits

- to be used in combination with BIS Clamp 3000 (Part No. 081 1 XXX)
- material: LDPE (low density polyethylene), grey
- working temperature from -20 °C to +40 °C

Part No.	L	B (mm)	b (mm)	Pack 1	App.
0814025	25 m	25	15	25	m.

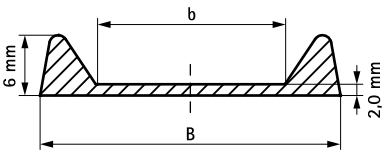

Complementary

62 BIS 3000 (zp)

BIS 434 Clamp for PE-Pipe

(B 35 25)

for PE-pipes 25 - 315 mm

M10 - G½" - G1"



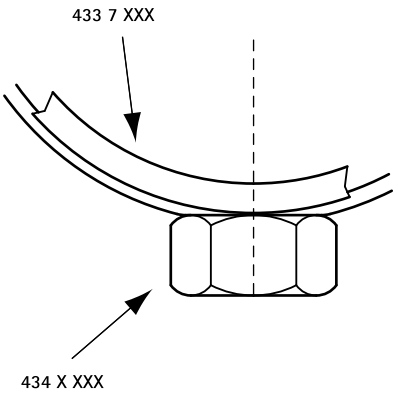

Features and Benefits

- two-screw clamp
- as guiding clamp for PE-Pipe
- for rigid fixing point fastening it is necessary to use metal clamp liners (Part No. 4337XXX)
- screws secured with anti-loss washer
- material: steel
- zinc plated

Part No.	D (mm)	DN	G	B (mm)	H (mm)	h (mm)	b x s (mm)	$F_{a,z}$ (N)	Pack 1
4343025	25	-	M10	66	48	27	30 x 3.0	1,100	50
4343032	32	25	M10	75	55	35	30 x 3.0	1,100	50
4343040	40	32	M10	82	63	37	30 x 3.0	1,100	50
4343050	50	40	M10	92	73	42	30 x 3.0	1,100	50
4343056	56	50	M10	98	79	45	30 x 3.0	1,100	50
4343063	63	57	M10	105	86	48	30 x 3.0	1,100	50
4343075	75	70	M10	117	98	54	30 x 3.0	1,100	25
4343080	82	-	M10	122	102	58	30 x 3.0	1,100	25
4343090	90	80	M10	132	113	62	30 x 3.0	1,100	25
4343100	102	-	M10	142	122	67	30 x 3.0	1,100	25
4343110	110	100	M10	152	133	72	30 x 3.0	1,100	25
4343125	125	125	M10	167	148	79	30 x 3.0	1,100	25
4343160	160	150	M10	202	185	98	30 x 3.0	1,100	25
4343200	200	200	M10	278	223	117	38 x 4.0	6,200	12
4343225	225	-	M10	269	248	129	38 x 4.0	6,200	12
4343250	250	250	M10	328	273	142	38 x 4.0	6,200	8
4343315	315	315	M10	393	338	174	38 x 4.0	6,200	8
4383032	32	25	G½"	75	60	40	30 x 3.0	1,100	50
4383040	40	32	G½"	82	68	42	30 x 3.0	1,100	50
4383050	50	40	G½"	92	78	47	30 x 3.0	1,100	50
4383056	56	50	G½"	98	84	50	30 x 3.0	1,100	50
4383063	63	57	G½"	105	91	53	30 x 3.0	1,100	50
4383075	75	70	G½"	117	103	59	30 x 3.0	1,100	25
4383090	90	80	G½"	132	118	67	30 x 3.0	1,100	25
4383110	110	100	G½"	152	138	77	30 x 3.0	1,100	25
4383125	125	125	G½"	167	153	84	30 x 3.0	1,100	25
4383140	140	-	G½"	182	163	87	30 x 3.0	1,100	25
4383160	160	150	G½"	202	188	102	30 x 3.0	1,100	25
4383161	160	150	G1"	237	187	101	38 x 4.0	6,200	15
4383200	200	200	G1"	278	230	123	38 x 4.0	6,200	12
4383225	225	-	G1"	303	254	135	38 x 4.0	6,200	12
4383250	250	250	G1"	325	280	153	38 x 4.0	6,200	8
4383315	315	300	G1"	393	345	181	38 x 4.0	6,200	8

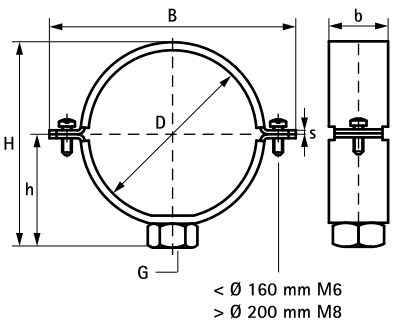

Complementary

375 BIS Fixing Accessories
469 BIS Fastenings
65 BIS Metal Liner 434 Clamp

Complementary

66 BIS Lining 434 Clamp

EN-SG 02/2022- Subject to modifications

BIS Metal Liner 434 Clamp

(B 35 30)

40 - 315 mm



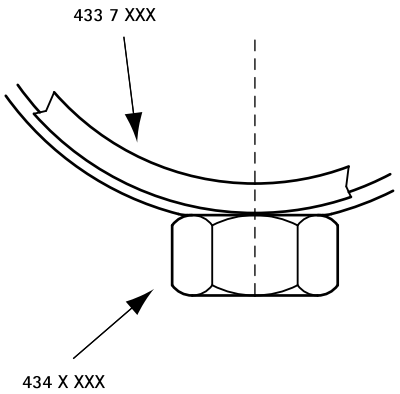

Features and Benefits

- two-part identical clamp liners
- to create a rigid fixing point, suitable for pipe clamp for PE pipe type 434
- profiled
- material: chrome steel 1.4016 (AISI 430)

Part No.	D (mm)	DN	B (mm)	b (mm)	Pack 1
4337040	40	32	42	30	25
4337050	50	40	42	30	25
4337056	56	50	42	30	25
4337063	63	57	42	30	25
4337075	75	70	42	30	25
4337090	90	80	42	30	25
4337110	110	100	42	30	25
4337125	125	125	42	30	25
4337160	160	150	42	30	25
4337200	200	200	54	38	10
4337250	250	250	54	38	10
4337315	315	300	54	38	10

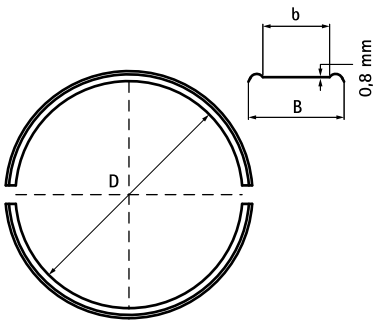

BIS Lining 434 Clamp

(B 35 35)

to be used in combination with BIS Clamp 434 up to and including D = 160 mm



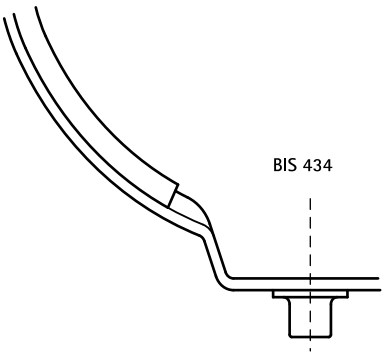

Features and Benefits

- to avoid damage to the pipe
- material: PVC (polyvinylchloride), black (with small addition of plasticizers)
- temperature resistance up to +55 °C

Part No.	L	Pack 1	App.
4389930	10 m	10	roll

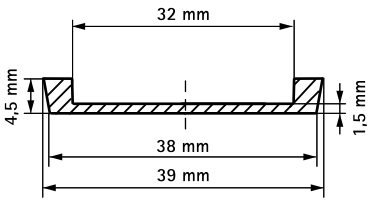

EN-SG 02/2022- Subject to modifications

BIS Hinged Pipe Clamp 400 (Round)

(B 40 05)

for rain water pipes 80 mm



Features and Benefits

- with quick locking system, type KSB
- for fixing of round rain water pipes
- locking screw: combi slot screw
- material: steel
- locking screw(s) from stainless steel
- clamp: hot dip galvanized

Part No.	D (mm)	B (mm)	H (mm)	Pack 1
4001080	80	115	179	25

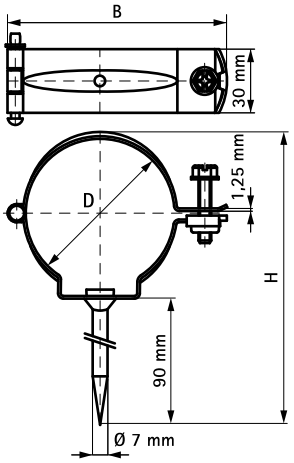

BIS Hinged Pipe Clamp 400 (Square)

(B 40 10)

for rain water pipes 100 mm



Features and Benefits

- with quick locking system
- for fixing of square rain water pipe
- locking screws: 2 combi slot screws
- material: steel
- locking screw(s) from stainless steel
- clamp: hot dip galvanized

Part No.	D (mm)	B (mm)	H (mm)	Pack 1
4031100	100	155	202	20

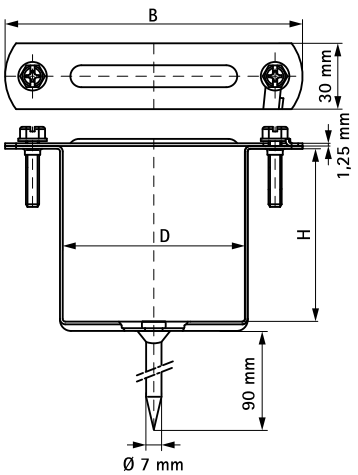

EN-SG 02/2022- Subject to modifications

BIS Funderingsbeugel

(B 55 06)

50 - 125 mm



Features and Benefits

- voor het snel en gemakkelijk monteren van de rioleringsleiding
- ronde profilering voorkomt beschadiging van de rioleringsbuis
- te gebruiken i.c.m. de funderingshaak, klemschuif en fixeringskap
- material: steel
- surface protection:
  - product is part of the BIS UltraProtect® 1000 system
  - suitable for in- and outdoor applications
  - stands min. 1,000 hours salt spray test (max. 5% red rust) according to ISO 9227

Part No.	D (mm)	B (mm)	H (mm)	h (mm)	d1 (mm)	Pack 1
4708030	50	89	130	59	9.0	50
4708024	75	120	149	71	9.0	50
4708005	110	155	184	106	9.0	25
4708006	125	170	199	121	9.0	25

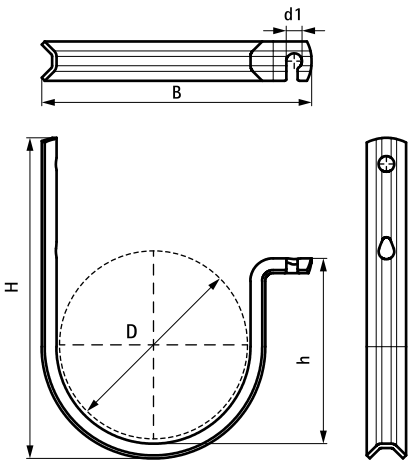

Complementary

70 BIS Combibeugel
71 BIS Fixeringskap
72 BIS Klemschuif

Complementary

73 BIS Funderingshaak

BIS Combibeugel

(B 55 11)

50 - 110 mm

Features and Benefits

- voor het snel en gemakkelijk monteren van de rioleringsleiding
- voor het 'oversteken' onder de vloer
- material: steel
- surface protection:
  - product is part of the BIS UltraProtect® 1000 system
  - suitable for in- and outdoor applications
  - stands min. 1,000 hours salt spray test (max. 5% red rust) according to ISO 9227

Part No.	D (mm)	H (mm)	h (mm)	b (mm)	s1 (mm)	d1 (mm)	Pack 1
4718050	50	135	59	25	2.5	9.0	50
4718075	75	170	71	25	2.5	9.0	25
4718110	110	235	106	25	2.5	9.0	25

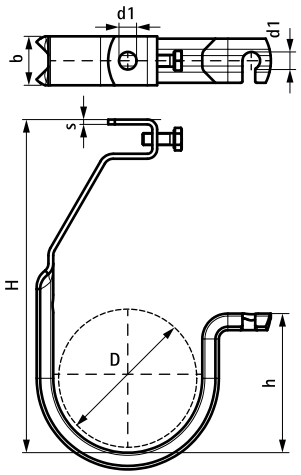

Complementary

69 BIS Funderingsbeugel
71 BIS Fixeringskap
72 BIS Klemschuif

Complementary

73 BIS Funderingshaak

EN-SG 02/2022- Subject to modifications

BIS Fixeringskap

(B 55 16)

50 - 125 mm



Features and Benefits

- te gebruiken i.c.m. de funderingshaak, klemschuif en fixeringskap
- ter voorkoming dat rioleringsleiding door opwaartse druk buiten de beugel komt
- material: steel
- surface protection:
  - product is part of the BIS UltraProtect® 1000 system
  - suitable for in- and outdoor applications
  - stands min. 1,000 hours salt spray test (max. 5% red rust) according to ISO 9227

Part No.	D (mm)	B (mm)	b (mm)	s (mm)	Pack 1
4708031	50	92	25	2.5	50
4708028	75	123	25	2.5	50
4708009	110	158	25	2.5	50
4708010	125	173	25	2.5	50

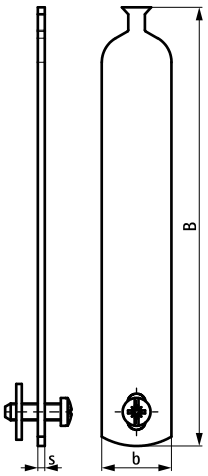

Complementary

70 BIS Combibeugel
69 BIS Funderingsbeugel

BIS Klemschuif

(B 55 21)



Features and Benefits

- voor de verbinding tussen de funderingshaak en de funderingsbeugel
- mogelijkheid om de leiding onder afschot te plaatsen
- material: steel
- surface protection:
  - product is part of the BIS UltraProtect® 1000 system
  - suitable for in- and outdoor applications
  - stands min. 1,000 hours salt spray test (max. 5% red rust) according to ISO 9227

Part No.	L	B (mm)	h (mm)	s (mm)	Pack 1	App.
4708003	25 mm	29	23	2.5	25	pc.

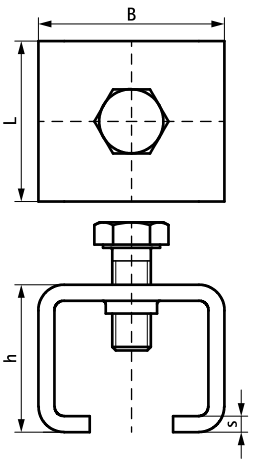

Complementary

69 BIS Funderingsbeugel
70 BIS Combibeugel

EN-SG 02/2022- Subject to modifications

BIS Funderingshaak

(B 55 26)



Features and Benefits

- voor bevestiging aan de funderingsbalk
- voorzien van gaten om bevestiging met korte zijde naar beneden mogelijk te maken (i.v.m. ruimtegebrek)
- material: steel
- surface protection:
  - product is part of the BIS UltraProtect® 1000 system
  - suitable for in- and outdoor applications
  - stands min. 1,000 hours salt spray test (max. 5% red rust) according to ISO 9227

Part No.	L	H (mm)	b (mm)	s (mm)	d1 (mm)	d2 (mm)	k (mm)	k1 (mm)	Pack 1
4708001	350 mm	200	25	2.5	9.0	80 x 7.0	110	55	20
4708011	700 mm	200	25	2.5	9.0	80 x 7.0	110	55	20

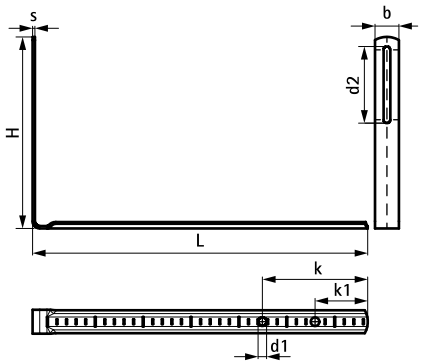

Complementary

69 BIS Funderingsbeugel
70 BIS Combibeugel

C BIS Plastic Pipe Clamps



starQuick®

starQuick® Clamp (Grey) 77
starQuick® Clamp (Grey) - Ø 71 - 115 mm 78
starQuick® Clamp - V0 fire rated 79
starQuick® Clamp (White) 80
starQuick® Clamp (Copper Colour) 81
starQuick® Clamp - M6 (Grey) 82
starQuick® Duo Wall Plate 83
starQuick® Threaded Rod Adaptor 84
starQuick® Distance Block 85
starQuick® Hammer-in Screw 86
starQuick® Rail 87
starQuick® Rail Adaptor 88
starQuick® Universal Rail Adaptor 89
starQuick® Fixing Nut 90
starQuick® Push Plug 91
starQuick® Hammerfix 92



BIS Clamps and Clips

BIS Combifix 93
BIS Isonyl 94
BIS Closed Saddle 95
BIS Rail Clip 100 96
BIS Push-fit Saddle - Single (White) 97
BIS Push-fit Saddle - Double (White) 98
BIS ARAYTUB 99
BIS Duplo KS 100



BIS Accessories for PVC Pipe Clamps

BIS Expansion Joint Bracket (BUP1000) 101

starQuick®

For heating and plumbing installations

starQuick®

- Self-closing clamp: quick and easy pipe fixing
- For all pipe types in Ø 10 - 65 mm
- For heating and plumbing installations
- Plastic clamps and accessories are corrosion free
- Full range of accessories for easy fixing to all surfaces, strut and threaded rod
- A versatile solution



Push pipe into clamp. Done!

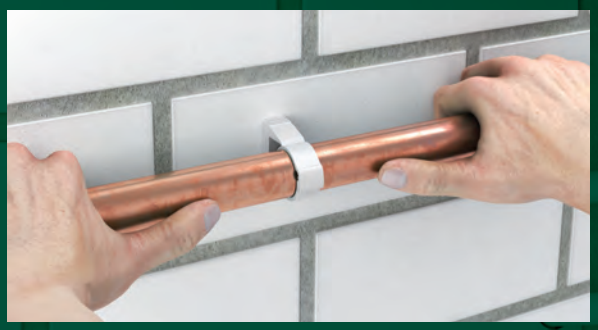

Done!

starQuick® Clamp (Grey)

(C 05 05)

to fix pipes for electrical and mechanical installations to wall, floor or ceiling 10 - 65 mm



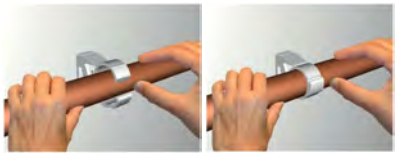

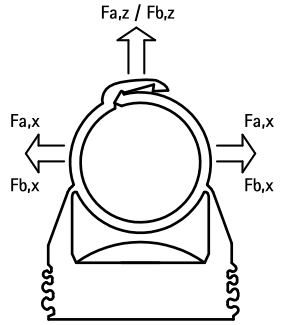

Features and Benefits

- one-part clamp
- clamp closes by applying pressure to the pipe
- for outdoor use and installations in swimming pool environments, chemical factories, zinc factories, etc.
- due to a patented profile it is possible to tack several clamps to each other
- material: modified PA6 (polyamide), grey (according to RAL 7035)
- resistant to UV, ageing, oil and petrol
- no corrosion, recyclable, halogen free
- temperature resistance from approx. -40 °C to approx. +90 °C (constant); short to approx. +130 °C

kiwa

UL LISTED (UL 1565)

UPC

Part No.	D (mm)	D (")	DN	Type	B (mm)	H (mm)	h (mm)	h2 (mm)	$F_{a,z}$ (N)	$F_{b,z}$ (N)	KIWA	UL	UPC	Pack 1	Pack 2
0854010	10 - 12	1/8	6	SQ-10	29	32	23	10.5	170	500	-	UL	UPC	100	1,200
0854012	12 - 14	1/4	8	SQ-12	29	34	23	10.5	180	550	KIWA	UL	UPC	100	1,200
0854015	14 - 16	-	-	SQ-15	29	36	24	10.5	200	600	KIWA	UL	UPC	100	1,200
0854018	16 - 20	3/8	10	SQ-17	29	40	26	10.5	230	700	KIWA	UL	UPC	100	800
0854022	20 - 23	1/2	15	SQ-20	29	44	27	10.5	270	800	KIWA	UL	UPC	50	600
0854028	24 - 28	3/4	20	SQ-25	40	50	31	10.5	280	850	KIWA	UL	UPC	50	600
0854031	28 - 32	-	-	SQ-28	40	53	32	10.5	300	900	KIWA	UL	UPC	50	400
0854035	32 - 35	1	25	SQ-32	43	57	34	10.5	330	1,000	KIWA	UL	UPC	50	400
0854038	35 - 40	-	-	SQ-36	47	66	41	12.0	370	1,100	KIWA	UL	UPC	25	300
0854042	40 - 44	1 1/4	32	SQ-40	52	70	42	12.0	400	1,200	KIWA	UL	UPC	25	200
0854050	44 - 50	-	-	SQ-47	57	76	45	12.0	430	1,300	-	UL	UPC	25	200
0854054	48 - 55	1 1/2	40	SQ-51	63	81	47	12.0	470	1,400	-	UL	UPC	15	180
0854063	59 - 65	2	50	SQ-59	74	94	55	12.0	500	1,500	-	UL	UPC	15	180

$F_{a,x} = F_{a,z}$ / $F_{b,x} = F_{b,z}$.
Maximum allowed load at a temperature of +21 °C (+70 °F) and fixing with M6 BIS starQuick® nut + M6 steel treaded rod.
The values are recommended values and based on our nowadays technical knowledge, experience and statements in the literature as well as testing under laboratory circumstances. They do not relieve the user of own testing of the end product due to the big number of parameter of influence in the mounting process and the application. A legal confirmed assurance of properties or the suitability for a specific application cannot be based on our specifications.

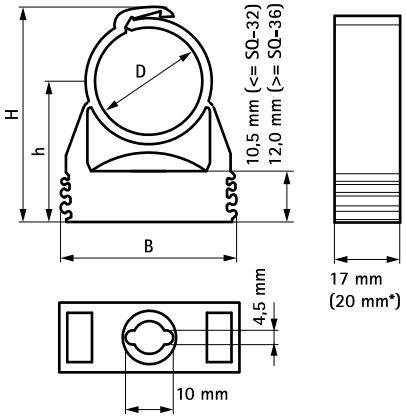

* BIS starQuick® Ø 59 - 65 mm

Complementary

83 starQuick® Duo Wall Plate
86 starQuick® Hammer-in Screw
90 starQuick® Fixing Nut

Alternative

82 starQuick® Clamp - M6 (Grey)

starQuick® Clamp (Grey)

(C 05 07)

to fix pipes for electrical and mechanical installations to wall, floor or ceiling 71 - 115 mm





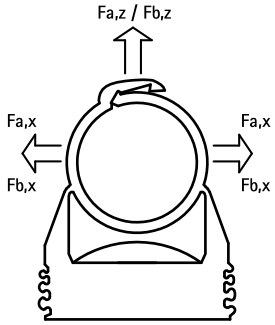

Features and Benefits

- one-part clamp
- clamp closes by applying pressure to the pipe, use hands for full closing
- clamp can be mounted to wall, floor or ceiling by use of two bolts (outer slots) or by using a standard Walraven slide nut (middle hole) and screwing the clamp on a threaded rod
- for outdoor use and installations in swimming pool environments, chemical factories, zinc factories, etc.
- material: modified PA6 (polyamide), grey (according to RAL 7035)
- resistant to UV, ageing, oil and petrol
- no corrosion, recyclable, halogen free
- temperature resistance from approx. -40 °C to approx. +90 °C (constant); short to approx. +130 °C

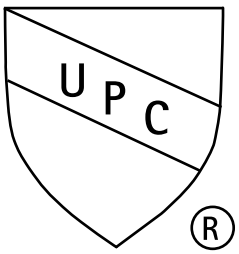

Part No.	D (mm)	D (")	DN	B (mm)	H (mm)	h (mm)	d1 (mm)	d2 (mm)	h2 (mm)	$F_{a,z}$ (N)	Pack 1
08541075	71 - 76	2½	65	105	116	75	Ø 10.5	13 x 8.3	28	650	50
08541090	88 - 93	3	80	115	133	85	Ø 13.0	13 x 8.3	32	730	40
08541110	109 - 115	4	100	145	165	105	Ø 13.0	15 x 10.5	35	1,200	25

Part no. 08541075: use M8 bolts (for outer slots) or M10 Walraven slide nut to connect to M10 threaded rods (for middle hole).
Part no. 08541090: use M8 bolts (for outer slots) or M12 Walraven slide nut to connect to M12 threaded rods (for middle hole).
Part no. 08541110: use M10 bolts (for outer slots) or M12 Walraven slide nut to connect to M12 threaded rods (for middle hole).
$F_{a,x} = F_{a,z} / F_{b,x} = F_{b,z}$.
Maximum allowed load at a temperature of +21 °C (+70 °F) and fixing with BIS Strut Slide Nut M12 + BIS Threaded Rod M12.
The values are recommended values and based on our nowadays technical knowledge, experience and statements in the literature as well as testing under laboratory circumstances. They do not relieve the user of own testing of the end product due to the big number of parameter of influence in the mounting process and the application. A legal confirmed assurance of properties or the suitability for a specific application cannot be based on our specifications.

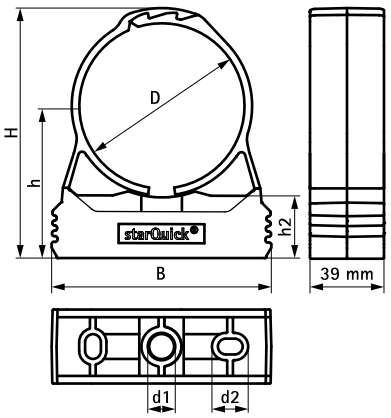

Complementary

236 BIS Strut Slide Nut (zp)
237 BIS Strut Slide Nut (hdg)
206 BIS RapidStrut® Fixing Rail (pg)

Complementary

235 BIS Strut Slide Nut (BUP1000)
205 BIS RapidStrut® Fixing Rail DS 5 (BUP1000)

EN-SG 02/2022- Subject to modifications

starQuick® Clamp – V0 fire rated

(C 05 207)

14 - 16 mm



Features and Benefits

- suitable for indoor and outdoor use
- for use with all pipe materials
- one-part clamp closes by applying pressure to the pipe
- due to a patented profile it is possible to tack several clamps to each other
- material: PA (polyamide - nylon)
- resistant to UV, ageing, oil and petrol
- no corrosion, recyclable, halogen free
- temperature resistance from approx. -104 °F to approx. +194 °F constant, approx. 266°F peak (Note: temperature must be above 15°F during installation process

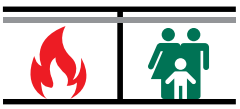



Part No.	D (mm)	Pack 1
0854015S	14 - 16	100

starQuick® Clamp (White)

(C 05 10)

to fix pipes for electrical and mechanical installations to wall, floor or ceiling 10 - 65 mm



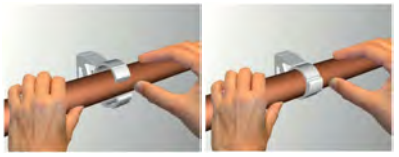

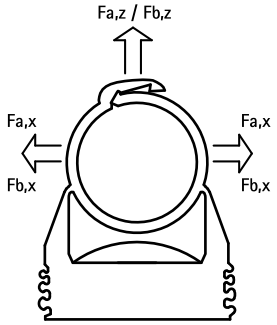

Features and Benefits

- one-part clamp
- clamp closes by applying pressure to the pipe
- for outdoor use and installations in swimming pool environments, chemical factories, zinc factories, etc.
- due to a patented profile it is possible to tack several clamps to each other
- material: modified PA6 (polyamide), white (according to RAL 9003)
- resistant to UV, ageing, oil and petrol
- no corrosion, recyclable, halogen free
- temperature resistance from approx. -40 °C to approx. +90 °C (constant); short to approx. +130 °C

Part No.	D (mm)	D (")	DN	Type	B (mm)	H (mm)	h (mm)	h2 (mm)	$F_{a,z}$ (N)	$F_{b,z}$ (N)	KIWA	UPC	Pack 1	Pack 2
0855010	10 - 12	⅛	6	SQ-10	29	32	23	10.5	170	500	-	UPC	100	1,200
0855012	12 - 14	¼	8	SQ-12	29	34	23	10.5	180	550	KIWA	UPC	100	1,200
0855015	14 - 16	-	-	SQ-15	29	36	24	10.5	200	600	KIWA	UPC	100	1,200
0855018	16 - 20	⅜	10	SQ-17	29	40	26	10.5	230	700	KIWA	UPC	100	800
0855022	20 - 23	½	15	SQ-20	29	44	27	10.5	270	800	KIWA	UPC	50	600
0855028	24 - 28	¾	20	SQ-25	40	50	31	10.5	280	850	KIWA	UPC	50	600
0855031	28 - 32	-	-	SQ-28	40	53	32	10.5	300	900	KIWA	UPC	50	400
0855035	32 - 35	1	25	SQ-32	43	57	34	10.5	330	1,000	KIWA	UPC	50	400
0855038	35 - 40	-	-	SQ-36	47	66	41	12.0	370	1,100	KIWA	UPC	25	300
0855042	40 - 44	1¼	32	SQ-40	52	70	42	12.0	400	1,200	KIWA	UPC	25	200
0855050	44 - 50	-	-	SQ-47	57	76	45	12.0	430	1,300	-	UPC	25	200
0855054	48 - 55	1½	40	SQ-51	63	81	47	12.0	470	1,400	-	UPC	15	180
0855063	59 - 65	2	50	SQ-59	74	94	55	12.0	500	1,500	-	UPC	15	180

$F_{a,x} = F_{a,z} / F_{b,x} = F_{b,z}$.
Maximum allowed load at a temperature of +21 °C (+70 °F) and fixing with M6 BIS starQuick® nut + M6 steel treaded rod.
The values are recommended values and based on our nowadays technical knowledge, experience and statements in the literature as well as testing under laboratory circumstances. They do not relieve the user of own testing of the end product due to the big number of parameter of influence in the mounting process and the application. A legal confirmed assurance of properties or the suitability for a specific application cannot be based on our specifications.

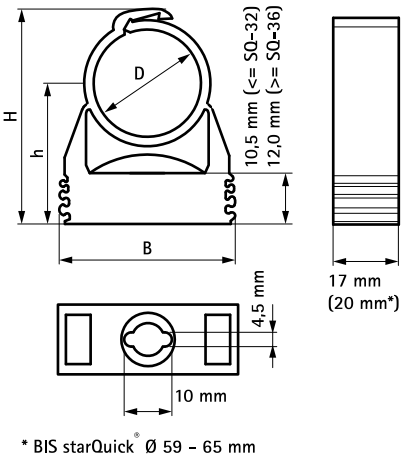

* BIS starQuick® Ø 59 - 65 mm

Complementary

83 starQuick® Duo Wall Plate
86 starQuick® Hammer-in Screw
90 starQuick® Fixing Nut

Alternative

77 starQuick® Clamp (Grey)

EN-SG 02/2022- Subject to modifications

starQuick® Clamp (Copper Colour)

(C 05 12)

to fix pipes for electrical and mechanical installations to wall, floor or ceiling 12 - 32 mm



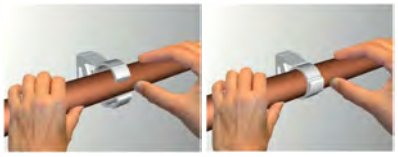

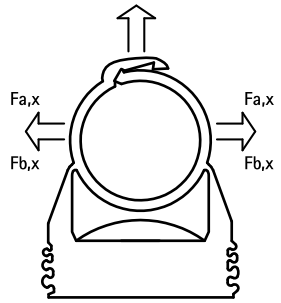

Features and Benefits

- one-part clamp
- clamp closes by applying pressure to the pipe
- for outdoor use and installations in swimming pool environments, chemical factories, zinc factories, etc.
- due to a patented profile it is possible to tack several clamps to each other
- material: modified PA6 (polyamide), copper colour
- resistant to UV, ageing, oil and petrol
- no corrosion, recyclable, halogen free
- temperature resistance from approx. -40 °C to approx. +90 °C (constant); short to approx. +130 °C

Part No.	D (mm)	D (")	DN	Type	B (mm)	H (mm)	h (mm)	$F_{a,z}$ (N)	$F_{b,z}$ (N)	KIWA	UPC	Pack 1	Pack 2
0855812	12 - 14	1/4	8	SQ-12	29	34	23	180	550	KIWA	UPC	100	1,200
0855815	14 - 16	-	-	SQ-15	29	36	24	200	600	KIWA	UPC	100	1,200
0855818	16 - 20	3/8	10	SQ-17	29	40	26	230	700	KIWA	UPC	100	800
0855822	20 - 23	1/2	15	SQ-20	29	44	27	270	800	KIWA	UPC	50	600
0855828	24 - 28	3/4	20	SQ-25	40	50	31	280	850	KIWA	UPC	50	600
0855831	28 - 32	-	-	SQ-28	40	53	32	300	900	KIWA	UPC	50	400

$F_{a,x} = F_{a,z}$ / $F_{b,x} = F_{b,z}$.
Maximum allowed load at a temperature of +21 °C (+70 °F) and fixing with M6 BIS starQuick® nut + M6 steel treaded rod.
The values are recommended values and based on our nowadays technical knowledge, experience and statements in the literature as well as testing under laboratory circumstances. They do not relieve the user of own testing of the end product due to the big number of parameter of influence in the mounting process and the application. A legal confirmed assurance of properties or the suitability for a specific application cannot be based on our specifications.

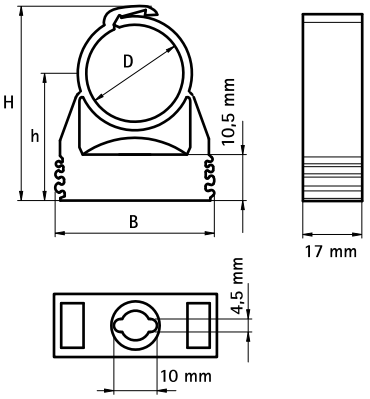

Complementary

86 starQuick® Hammer-in Screw
90 starQuick® Fixing Nut

starQuick® Clamp – M6 (Grey)

(C 05 15)

to fix pipes for electrical and mechanical installations to wall, floor or ceiling 12 - 55 mm





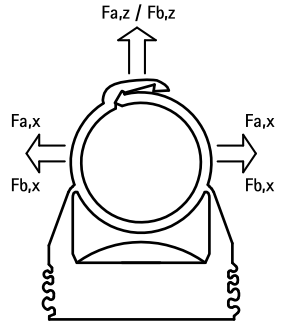

Features and Benefits

- one-part clamp
- clamp closes by applying pressure to the pipe
- for outdoor use and installations in swimming pool environments, chemical factories, zinc factories, etc.
- due to a patented profile it is possible to tack several clamps to each other
- with pre-assembled connection nut M6
- material: modified PA6 (polyamide), grey (according to RAL 7035)
- resistant to UV, ageing, oil and petrol
- no corrosion, recyclable, halogen free
- temperature resistance from approx. -40 °C to approx. +90 °C (constant); short to approx. +130 °C

kiwa

(UL 1565)

Part No.	D (mm)	D (")	DN	G	B (mm)	H (mm)	h (mm)	$F_{a,z}$ (N)	$F_{b,z}$ (N)	KIWA	UL	UPC	Pack 1	Pack 2
0854612	12 - 14	1/4	8	M6	29	34	23	180	550	KIWA	UL	UPC	100	1,200
0854615	14 - 16	-	-	M6	29	36	24	200	600	KIWA	UL	UPC	100	1,200
0854618	16 - 20	3/8	10	M6	29	40	26	230	700	KIWA	UL	UPC	100	800
0854622	20 - 23	1/2	15	M6	29	44	27	270	800	KIWA	UL	UPC	50	600
0854628	24 - 28	3/4	20	M6	40	50	31	280	850	KIWA	UL	UPC	50	600
0854631	28 - 32	-	-	M6	40	53	32	300	900	KIWA	UL	UPC	50	400
0854635	32 - 35	1	25	M6	43	57	34	330	1,000	KIWA	UL	UPC	50	400
0854638	35 - 40	-	-	M6	47	66	41	370	1,100	KIWA	UL	UPC	25	300
0854642	40 - 44	1 1/4	32	M6	52	70	42	400	1,200	KIWA	UL	UPC	25	200
0854650	44 - 50	-	-	M6	57	76	45	430	1,300	-	UL	UPC	25	200
0854654	48 - 55	1 1/2	40	M6	63	81	47	470	1,400	-	UL	UPC	15	180

$F_{a,x} = F_{a,z}$ / $F_{b,x} = F_{b,z}$.
Maximum allowed load at a temperature of +21 °C (+70 °F) and fixing with M6 BIS starQuick® nut + M6 steel treaded rod.
The values are recommended values and based on our nowadays technical knowledge, experience and statements in the literature as well as testing under laboratory circumstances. They do not relieve the user of own testing of the end product due to the big number of parameter of influence in the mounting process and the application. A legal confirmed assurance of properties or the suitability for a specific application cannot be based on our specifications.

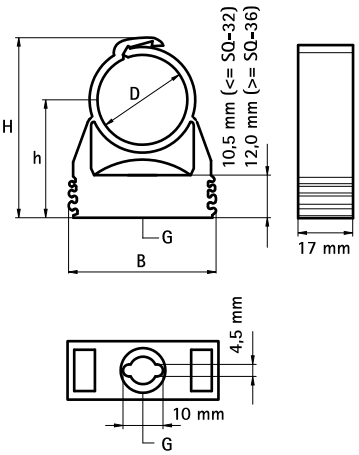

Complementary

469 BIS Fastenings
91 starQuick® Push Plug
328 Britclips® FC M6 x 9

EN-SG 02/2022- Subject to modifications

starQuick® Duo Wall Plate

(C 05 20)

accessories BIS starQuick® Pipe Clamps without Nut





Features and Benefits

- for fixing of two pipes with starQuick® Clamps
- suitable for starQuick® Clamps up to SQ-20
- the distance between the pipe and the wall is equal to that of a single clip
- material: modified PA6 (polyamide), grey or white
- resistant to UV, ageing, oil and petrol
- no corrosion, recyclable, halogen free
- temperature resistance from approx. -40 °C to approx. +90 °C (constant); short to approx. +130 °C

Part No.	Model	Colour	$F_{a,z}$ (N)	Pack 1	Pack 2
0854000	-	Grey (RAL 7035)	600	100	1,200
0855000	-	White (RAL 9003)	600	100	1,200
0854300	With hammer-in screw	Grey (RAL 7035)	600	50	600
Hammer-in screw: suitable for fixing into concrete, aerated concrete, brick.					

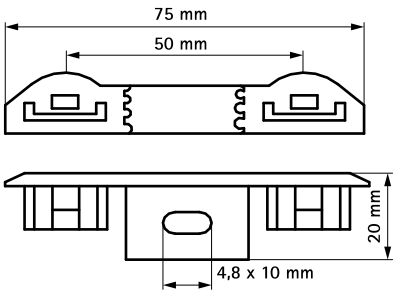

Complementary
86 starQuick® Hammer-in Screw

Alternative
87 starQuick® Rail

starQuick® Threaded Rod Adaptor

(C 05 25)

accessories BIS starQuick® Pipe Clamps without Nut

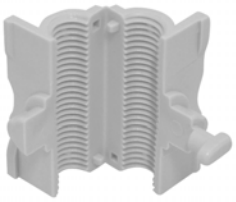



Features and Benefits

- to fix a starQuick® Clamp to a threaded rod
- to add pipework quickly and simply to an existing installation
- suitable for SQ-10 up to SQ-51
- material: PA (polyamide), grey (according to RAL 7035)
- resistant to UV, ageing, oil and petrol
- no corrosion, recyclable, halogen free
- temperature resistance from approx. -40 °C to approx. +90 °C (constant); short to approx. +130 °C

Part No.	Model	G	Pack 1	Pack 2
0854356	SQ10 - SQ51	M6	100	1,200
0854358	SQ10 - SQ51	M8	100	1,200
0854359	SQ10 - SQ32	3/8"	25	250

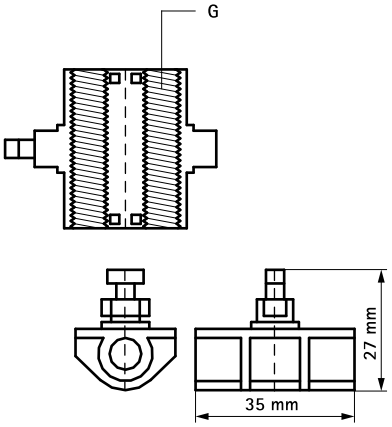

EN-SG 02/2022- Subject to modifications

starQuick® Distance Block

(C 05 30)

accessories BIS starQuick® Pipe Clamps without Nut



Features and Benefits

- for clamp fixing with a distance to the structure
- for screwing a clip to a distance block, use a screw of at least 55 mm
- suitable for SQ-10 up to SQ-36
- a starQuick® Clip can easily be stacked to a distance block
- for a larger stand off, distance blocks can be clicked together
- material: modified PA6 (polyamide), grey (according to RAL 7035)
- resistant to UV, ozone and chemicals
- no corrosion, recyclable, halogen free
- temperature resistance from approx. -40 °C to approx. +90 °C (constant); short to approx. +130 °C

Part No.	L	B (mm)	H (mm)	Pack 1	Pack 2
0854510	27 mm	17	10	25	250

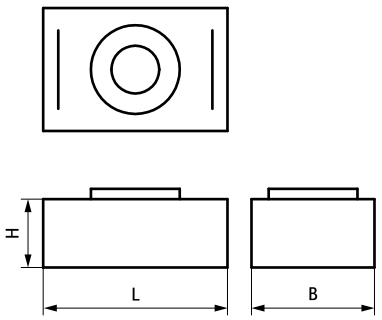

starQuick® Hammer-in Screw

(C 05 35)

accessories BIS starQuick® Pipe Clamps without Nut





Features and Benefits

- for fixing of starQuick® Clamps without nut
- suitable for fixing onto concrete, aerated concrete, brick
- material: screw made of steel, plug made of PA (polyamide), grey

Part No.	Pack 1	Pack 2
0854301	25	250

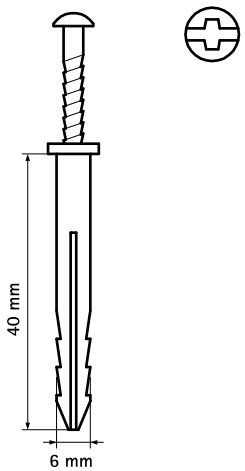

EN-SG 02/2022- Subject to modifications

starQuick® Rail

(C 05 45)

accessories BIS starQuick® Pipe Clamps without Nut





Features and Benefits

- for fixing of two or more pipes with starQuick® Clamps without nut
- the starQuick® Clamp is fixed to the rail by mean of the starQuick® Rail Adaptor (Part No. 0854313)
- material: PVC (polyvinylchloride), grey (according to RAL 7035)

Part No.	L	Pack 1	Pack 2
0854316	150 mm	50	400
0854325	1 m	25	-

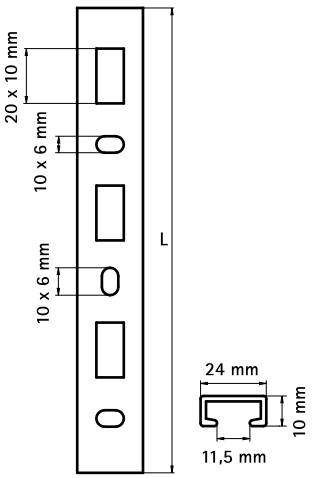

Complementary

88 starQuick® Rail Adaptor

starQuick® Rail Adaptor

(C 05 50)

accessories BIS starQuick® Rail





Features and Benefits

- suitable for starQuick® Clamps up to SQ-32
- for fixing of a starQuick® Clamp (without nut) on a starQuick® Rail or on a Strut-Adaptor (Part No. 0854331)
- material: modified PA6 (polyamide), grey (according to RAL 7035)
- resistant to UV, ageing, oil and petrol
- no corrosion, recyclable, halogen free
- temperature resistance from approx. -40 °C to approx. +90 °C (constant); short to approx. +130 °C

Part No.	For	Pack 1	Pack 2
0854313	BIS starQuick®	20	200

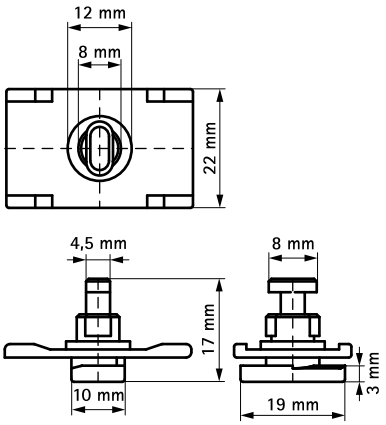

EN-SG 02/2022- Subject to modifications

starQuick® Universal Rail Adaptor

(C 05 57)

accessories BIS starQuick® Pipe Clamps without Nut





Features and Benefits

- for fixing starQuick® Clamps to BIS RapidRail® or Strut Rail
- to add pipework quickly and simply to an existing installation
- suitable for SQ-10 up to SQ-51
- suitable for rail WM0, 1, 15, 2, 30, 35 + Strut
- material: modified PA6 (polyamide), grey (according to RAL 7035)
- resistant to UV, ageing, oil and petrol
- no corrosion, recyclable, halogen free
- temperature resistance from approx. -40 °C to approx. +90 °C (constant); short to approx. +130 °C

Part No.	For Rail	Pack 1	Pack 2
0854332	WM0 - 35 + Strut	50	600

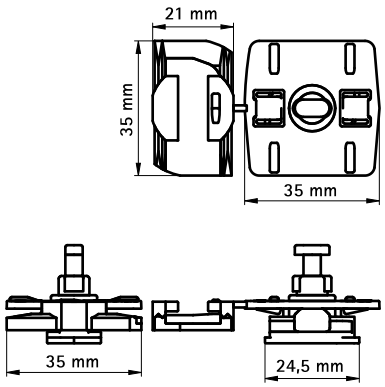

starQuick® Fixing Nut

(C 05 65)

accessories BIS starQuick® Pipe Clamps without Nut



085 4 XXX



085 5 006



Features and Benefits

- to make a threaded connection in a starQuick® Clamp
- entirely integrated in clamp (not protruding)
- material: PC (polycarbonate), grey or white
- no corrosion
- temperature resistance from approx. -35 °C to approx. +110 °C (constant); short to approx. +125 °C

Part No.	G	Colour	Pack 1	Pack 2
0854006	M6	Grey (RAL 7035)	100	1,000
0855006	M6	White (RAL 9003)	100	1,000
0854007	M7B	Grey (RAL 7035)	100	1,000
0854307	M7F	Grey (RAL 7035)	100	1,000
0854308	M8	Grey (RAL 7035)	100	1,000

M7B: pitch = M7 x 1 mm.
M7F: pitch = M7 x 1.5mm.

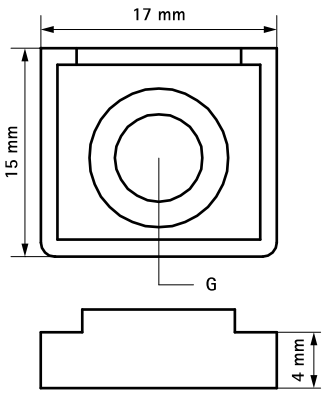

EN-SG 02/2022- Subject to modifications

starQuick® Push Plug

(C 05 75)

accessories BIS starQuick® Pipe Clamps with Nut



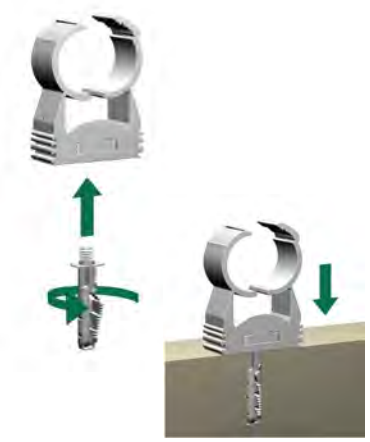

Features and Benefits

- for fixing of a starQuick® Clamp or other clamp with thread connection M6
- pre-drill hole Ø 6 mm and insert plug
- material: modified PA6 (polyamide), grey (according to RAL 7035)
- resistant to UV, ageing, oil and petrol
- no corrosion, recyclable, halogen free
- temperature resistance from approx. -40 °C to approx. +90 °C (constant); short to approx. +130 °C

Part No.	Pack 1	Pack 2
6101063	50	500

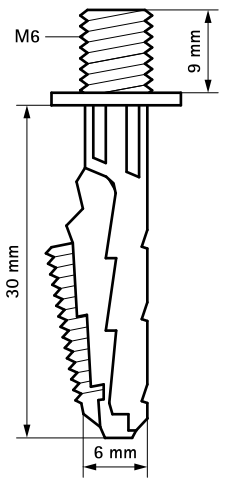

starQuick® Hammerfix

(C 05 80)

accessories BIS starQuick® Pipe Clamps with Nut





Features and Benefits

- Part No. 0854338: for fixing of a BIS starQuick® Clamp on steel rail with a 15 mm slot (e.g. WM0, 1, 15, 2, 30 or 35)
- material: metal parts made of steel 1.0332; spring(s) made of POM (polyoxymethylene), green
- zinc plated

Part No.	G	For Rail	Pack 1	Pack 2
0854338	M8	WM0 - 35	50	600

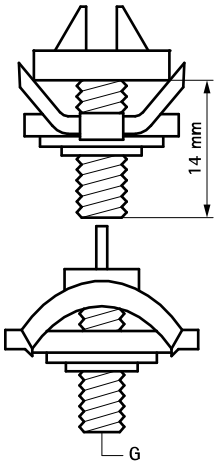

EN-SG 02/2022- Subject to modifications

BIS Combifix

(C 10 06)

15 - 50 mm



Features and Benefits

- one-part clamp
- rapid installation
- easy and rapid closing
- can only be opened with a screwdriver or similar, not by hand
- can also be installed with direct fixing gas tools
- hole for M6 screw
- material: PP (polypropylene), grey
- halogen free
- UV resistant

Part No.	D (mm)	D (")	DN	B (mm)	Pack 1	Pack 2
0853715	15 - 18	3/8	10	29	100	1,000
0853722	20 - 25	1/2	15	37	100	1,000
0853728	28 - 32	-	-	48	50	400
0853735	35 - 42	-	-	60	50	300
0853750	50	-	-	75	50	300

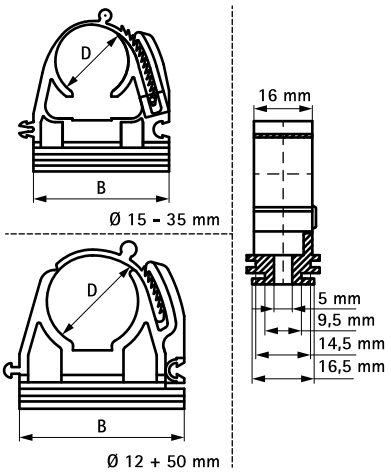

BIS Isonyl

(C 10 08)

for fixing of cables and tubes 15 - 50 mm



Features and Benefits

- one-part clamp
- patented security closing
- can also be installed with direct fixing gas tools
- can be used with all kind of pipes
- hole for M6 screw
- material: PP (polypropylene), grey
- UV resistant
- flexible and elastic

Part No.	D (mm)	D (")	DN	B (mm)	H (mm)	h (mm)	s (mm)	$F_{a,z}$ (N)	$F_{b,z}$ (N)	Pack 1	Pack 2
0853615	15 - 16	-	-	21	34.5	21.5	1.2	150	450	100	1,000
0853618	18 - 20	-	-	25	38.0	24.0	1.8	150	450	100	1,200
0853622	22 - 25	-	-	30	42.0	25.0	1.7	150	450	100	1,200
0853626	26 - 28	¾	20	33	47.0	27.0	2.0	150	450	50	500
0853632	32 - 35	1	25	38	59.0	36.0	2.0	150	450	50	600
0853640	40 - 42	-	-	46	65.0	36.0	2.4	150	450	25	300
0853648	48 - 50	1½	40	56	75.0	41.0	3.1	150	450	25	300

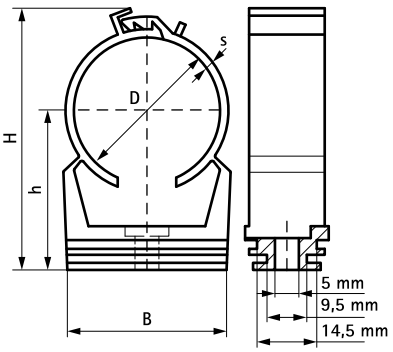

EN-SG 02/2022- Subject to modifications

BIS Closed Saddle

(C 10 17)

for fixing of cables and tubes 15 - 50 mm



Features and Benefits

- one-part clamp
- space saving
- easy and rapid installation
- can also be installed with direct fixing gas tools
- installation in channel or rapid installation with screw M6
- hole for M6 screw
- total closing of the clip around the tube
- material: PP (polypropylene), grey
- halogen free
- UV resistant

Part No.	D (mm)	D (")	DN	B (mm)	$F_{a,z}$ (N)	$F_{b,z}$ (N)	Pack 1	Pack 2
0853115	15	-	-	16	100	300	100	1,200
0853118	18	-	-	19	100	300	100	1,200
0853120	20	½	15	21	100	300	100	1,200
0853122	22	-	-	23	100	300	100	1,000
0853125	25	-	-	26	100	300	100	1,000
0853128	28	-	-	28	100	300	100	1,000
0853132	32	1	25	32	100	300	50	500
0853140	40	-	-	38	100	300	50	500
0853150	50	-	-	47	100	300	25	500

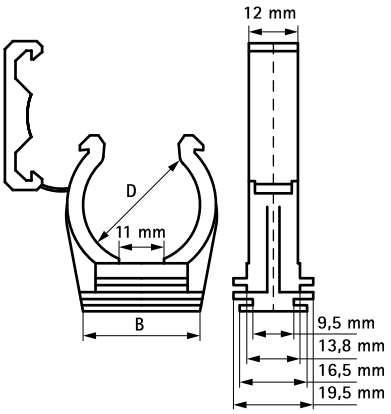

BIS Rail Clip 100

(C 10 18)

for fixing of cables and tubes 15 - 50 mm



Features and Benefits

- one-part clamp
- especially apropriate for electricity tubes and for cables with rubber covering
- space saving
- can also be installed with direct fixing gas tools
- installation in channel or rapid installation with screw M6
- hole for M6 screw
- material: PP (polypropylene), grey (according to RAL 7035)
- halogen free
- UV resistant

Part No.	D (mm)	D (")	DN	B (mm)	Pack 1	Pack 2
08511018	15 - 18	3/8	10	24	100	1,000
08511022	20 - 22	1/2	15	31	100	1,200
08511028	25 - 28	3/4	20	37	100	1,200
08511035	32 - 35	1	25	45	50	600
08511040	40	1 1/4	32	55	50	300
08511050	50	1 1/2	40	65	25	300

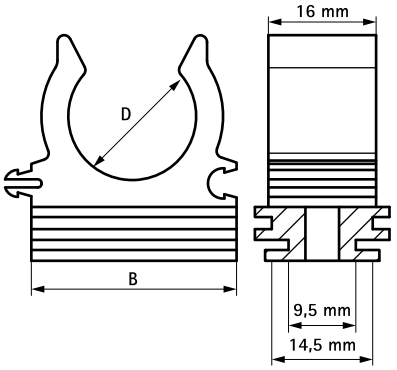

EN-SG 02/2022- Subject to modifications

BIS Push-fit Saddle - Single (White)

(C 10 25)

for all pipes 8 - 42 mm

M6



Features and Benefits

- one-part clamp
- connection thread M6 made of brass
- material: PP (polypropylene), white (according to RAL 9016)
- fire class B2
- no corrosion, recyclable, halogen free, resistant to UV and ageing
- temperature resistance from approx. -30 °C to approx. +90 °C (constant); short to approx. +110 °C

Part No.	D (mm)	D (")	DN	G	B (mm)	H (mm)	h (mm)	b (mm)	Pack 1	Pack 2
0853008	8	-	-	M6	14	18	14	12	100	2,000
0853010	10	1/8	6	M6	18	20	17	12	100	1,000
0853012	12	-	-	M6	20	22	18	12	100	1,000
0853015	14 - 15	-	-	M6	24	26	19	12	100	1,000
0853018	16 - 18	3/8	10	M6	27	30	24	14	100	1,200
0853022	20 - 22	1/2	15	M6	31	32	28	14	100	1,200
0853025	25	3/4	20	M6	35	38	16	14	100	1,200
0853028	28	3/4	20	M6	39	47	34	14	100	1,000
0853032	32	1	-	M6	43	45	16	14	50	600
0853035	35	-	-	M6	50	54	38	14	50	600
0853042	42	-	-	M6	57	58	21	14	50	500

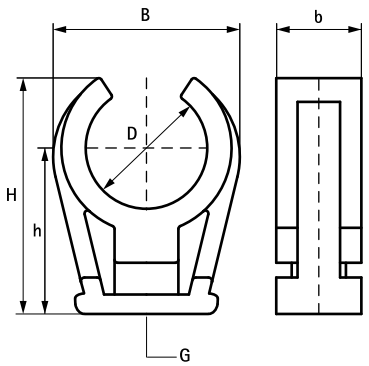

Alternative

80 starQuick® Clamp (White)

BIS Push-fit Saddle - Double (White)

(C 10 27)

for all pipes 8 - 28 mm

M6



Features and Benefits

- one-part saddle
- for fixing of two pipes
- connection thread M6 made of brass
- material: PP (polypropylene), white (according to RAL 9016)
- fire class B2
- no corrosion, recyclable, resistant to UV and ageing
- temperature resistance from approx. -30 °C to approx. +90 °C (constant); short to approx. +110 °C

Part No.	D (mm)	D (")	DN	G	B (mm)	H (mm)	h (mm)	b (mm)	k (mm)	Pack 1	Pack 2
0853208	8	-	-	M6	40	18	14	12	26	100	1,000
0853210	10	1/8	6	M6	45	20	17	12	28	100	1,200
0853212	12	-	-	M6	53	22	18	12	33	100	1,000
0853215	14 - 15	-	-	M6	60	26	19	12	36	100	1,000
0853218	16 - 18	3/8	10	M6	65	30	24	14	38	100	800
0853222	20 - 22	1/2	15	M6	73	32	28	14	42	50	500
0853228	28	3/4	20	M6	89	47	34	14	50	50	400

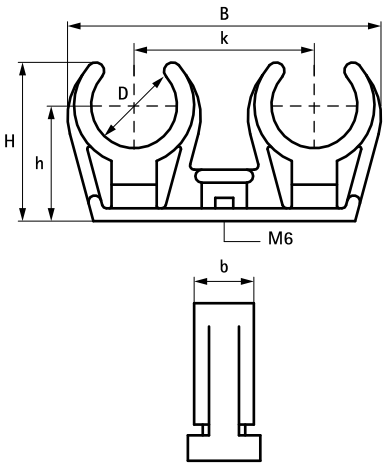

Alternative

80 starQuick® Clamp (White)
83 starQuick® Duo Wall Plate

EN-SG 02/2022- Subject to modifications

BIS ARAYTUB

(C 10 35)

for all pipes 16 - 25 mm





Features and Benefits

- clamp with integral plug
- locking with double toothing for extra security
- easy and quick to use
- for massive and hollow materials
- the plug can be expanded with a screw Ø 3.5 - 4.5 mm or a nail to get a better pull-out resistance (important in hollow materials)
- material: PA (polyamide), grey

Part No.	D (mm)	Pack 1	Pack 2
08505216	16	100	500
08505220	20	100	500
08506120	20	200	2,000
08505225	25	100	500

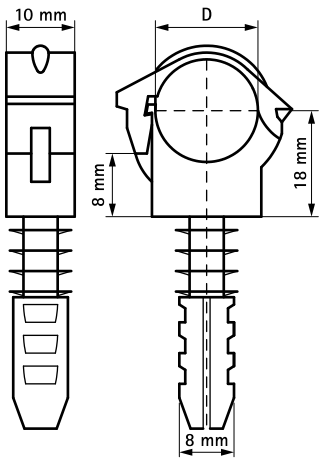

Alternative

77 starQuick® Clamp (Grey)

BIS Duplo KS

(C 10 55)

for metal pipes 15 - 22 mm



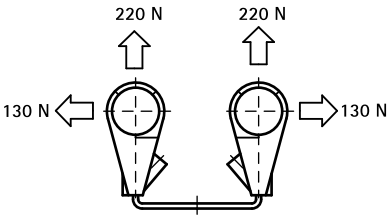

Features and Benefits

- two clamps on connection bracket
- clamps can be repositioned when open or closed - only fixed when finally secured
- plastic clamp prevents noises which arise from expansion or contraction of the pipe
- adjustable distance between pipe and wall
- locking screw connected to band, which makes it impossible to lose screw
- material: connection bracket made of steel; connector made of PP (polypropylene), white
- fire class B2
- recyclable, resistant to UV and ageing
- zinc plated
- temperature resistance from approx. -30 °C to approx. +90 °C (constant); short to approx. +110 °C

Part No.	D (mm)	D (")	DN	B (mm)	H1 (mm)	h1 (mm)	Colour	$F_{a,z}$ (N)	$F_{a,x}$ (N)	Pack 1
3225015	15	-	-	82	57 - 69	45 - 57	White (RAL 9018)	220	130	50
3225022	22	½	15	89	64 - 76	49 - 61	White (RAL 9018)	220	130	50

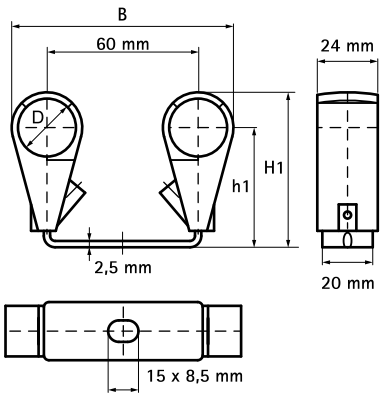

Complementary

469 BIS Fastenings
588 BIS Under Floor / Radiator Brackets

EN-SG 02/2022- Subject to modifications

BIS Expansion Joint Bracket (BUP1000)

(C 30 15)

accessories BIS PVC pipe clamps



Features and Benefits

- for fixing of rain water pipe over expansion joints
- with 'claws' which grip on to the band
- material: connection bracket made of steel; connector made of PC (polycarbonate), grey
- surface protection:
  - product is part of the BIS UltraProtect® 1000 system
  - suitable for in- and outdoor applications
  - stands min. 1,000 hours salt spray test (max. 5% red rust) according to ISO 9227

Part No.	Model	L	B (mm)	H (mm)	h (mm)	s (mm)	d1 (mm)	d2 (mm)	k (mm)	Colour	Pack 1
1481000	Steel, with threaded connector	25 mm	104	36	25	3	15 x 6	-	80	Grey	50
1481010	Steel	25 mm	104	10	-	3	15 x 6	8.5	80	-	50

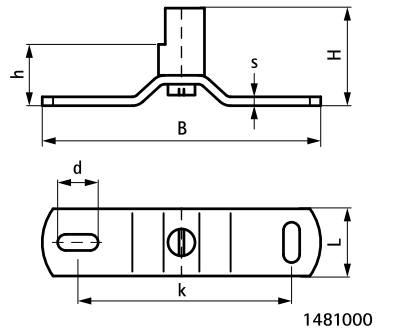

1481000

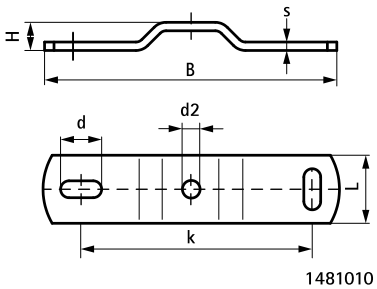

1481010

E BIS Fixing Points and Sliding Devices



BIS Fixing Points

BIS dB-FiX® 40 Noise Insulating Fixing Point 105
BIS dB-FiX® 80 Fixing Point Assembly 106
BIS dB-FiX® 200 Fixing Point Assembly 107
BIS dB-FiX® 80 Fixing Point Assembly Kit 108
BIS dB-FiX® 200 Fixing Point Assembly Kit 109
BIS dB-FiX® 80 / 200 Mounting Kit 110
BIS dB-FiX® 80 Stand-off Fixing Kit 111
BIS dB-FiX® 200 Stand-off Fixing Kit 112
BIS dB-FiX® 80 / 200 Support Plate 113
Silentbloc Type A M8x23mm 114
Silentbloc Strut type A M8x23mm 115
BIS Fixpoint Console 'Light' (BUP1000) 116
BIS Fixpoint Console 'Medium' (BUP1000) 117
BIS Fixpoint Console 'Heavy' (BUP1000) 118
BIS Threaded Rod Support 119



BIS Expansion Devices

BIS Expansion Joint 120
BIS Expansion Device (BUP1000) 121
BIS Expansion Device 122
BIS Expansion Guide Assembly (BUP1000) 123
BIS Slide Block GFRP (BUP1000) 124

EN-SG 02/2022- Subject to modifications

Fixing Points and Sliding Devices

The expansion and contraction of pipes usually occurs under the influence of temperature changes. Fixing points are applied to pipes with considerable expansion. The fixing point is made to a neutral point so that the pipe can expand in both directions.
Slides are applied in between the fixing points, so that the pipe is free to expand and contract.

To select the appropriate fixing point it is necessary to know:
- the pipe material
- the diameter and thickness of the pipe
- the minimum and maximum temperature
- the maximum pressure in the pipe

The expansion and contraction of the pipe can be accommodated:
- in a natural way, in existing bends or expansion loops
- in a designed way, for example by using a com-pensator

When a compensator is being used, consideration must be given to the pressure in the pipe. Therefore, it is preferable to accommodate the expansion in a natural way. The fixing point is used to ensure that the expansion is directed to the expansion loop or compensator where the force and movement is controlled. The pipe fixings between the fixing point and the expansion loop, only guide the pipe. At these 'guiding points' it is important that the friction resistance is by the fixing point.

When an expansion loop is being used, the distance between the first guiding clamp and the loop is important. The smaller this distance, the bigger the force to bend the pipe and the bigger the expansion to loose in the bend. This force is transferred to the fixing point.

The occurring force on a fixing point F_f when using an expansion loop:
1. The friction force caused by the slides F_w;
2. The force caused by the bending of the expansion loop F_b.

$$F_f = F_w + F_b$$

To determine the bending force F_b, first determine the length of the expansion loop. The length of this loop depends on the change in length of the pipe. The change of length of the pipe ΔL depends on the length between the fix point and the expansion bend, the co-efficient of expansion L of the pipe material and the difference in temperature ΔT.

$$\Delta L = L \times \alpha \times \Delta T$$

The length of the expansion bend L_b depends on the expansion ΔL, the outside diameter of the pipe D_b and the material properties of the pipe K.

K depends on the elasticity modulus of the pipe material E and the maximum allowable/acceptable tension in the material σ.

$$K = \sqrt{(1.5 \times E)/\sigma}$$

$$L_b = K \sqrt{(D_b \times \Delta L)}$$

The bending force F_b depends on the moment of inertia I of the pipe, the length of the expansion bend L_b and the wall thickness of the pipe $D_b - D_i$.

$$F_b = \frac{\sigma \times \pi \, (D_b^4 - D_i^{4)}}{32 \times D_b \times L_b}$$

The friction force F_w depends on the co-efficient of friction μ of the slides and the loads F to the slides. The load consists of the weight of the pipe and the content F_p.

$$F_w = F_p \times \mu$$

Legend

F_f	force to the fixing point	N		K		material constant	
F_w	friction force	N		L_b		length of the expansion bend	mm
F_p	weight of the pipe plus content	N		ΔL	*(Delta L)*	change of length of the pipe	mm
F_b	force to bend the expansion bend	N		ΔT	*(Delta T)*	change max. and min. temperature	°C
D_b	outside diameter of the pipe	mm		α	*(Alfa)*	linear expansion co-efficient of the pipe material	mm/m°C
D_i	inside diameter of the pipe	mm		μ	*(Mu)*	friction co-efficient of the slide	
I	moment of inertia of the pipe	mm^4		σ	*(Sigma)*	maximum acceptable tension in the pipe	N/mm^2
E	elasticity modulus of the pipe material	N/mm^2		π	*(Pi)*	mathematic number 3.142	

EN-SG 02/2022- Subject to modifications

BIS dB-FiX® 40 Noise Insulating Fixing Point

(E 05 10)

for noise insulation fixing point



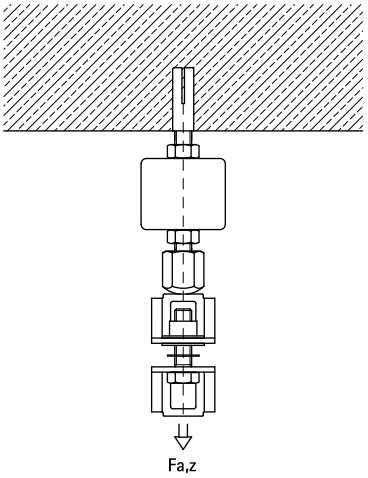

Features and Benefits

- noise insulating single fixing point
- material: stainless steel 1.4301 (AISI 304)
- sound insulating lining according DIN 4109
- noise insulation by moulded TPE rubber

Part No.	G	$F_{a,z}$ (N)	Pack 1
6697005	M10	500	25

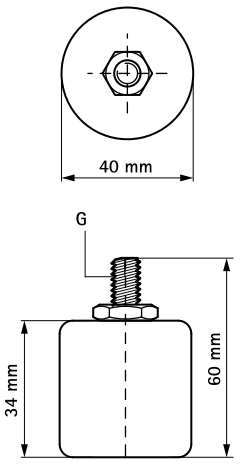

BIS dB-FiX® 80 Fixing Point Assembly

(E 05 20)

for noise insulation fixing point



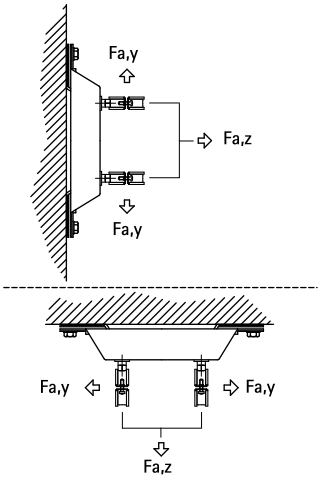

Features and Benefits

- noise insulating fixing point for pipes up to Ø 2" (clamp BIS HD500 Ø 59 - 65 mm)
- very stable
- material: steel
- sound insulating lining according DIN 4109
- zinc plated
- noise insulation by moulded EPDM rubber

Part No.	G	$F_{a,z}$ (N)	$F_{a,y}$ (N)	Pack 1
6693008	M10	3,000	2,700	10

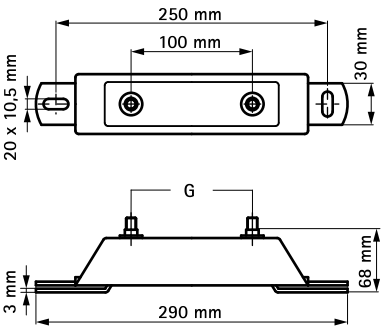

Complementary

201 BIS RapidStrut® Fixing System
110 BIS dB-FiX® 80 / 200 Mounting Kit

Alternative

107 BIS dB-FiX® 200 Fixing Point Assembly

EN-SG 02/2022- Subject to modifications

BIS dB-FiX® 200 Fixing Point Assembly

(E 05 25)

for noise insulation fixing point



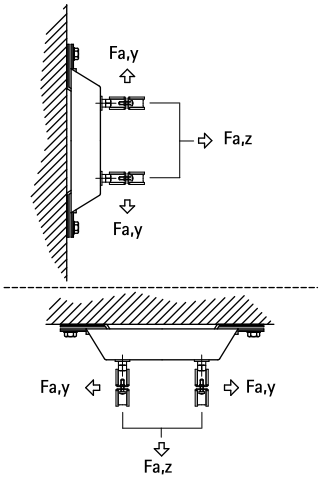

Features and Benefits

- noise insulating fixing point for pipes up to Ø 8" (clamp BIS HD500 Ø 217 - 227 mm)
- very stable
- material: steel
- sound insulating lining according DIN 4109
- zinc plated
- noise insulation by moulded EPDM rubber

Part No.	G	$F_{a,z}$ (N)	$F_{a,y}$ (N)	Pack 1
6693020	M12	7,000	6,600	5

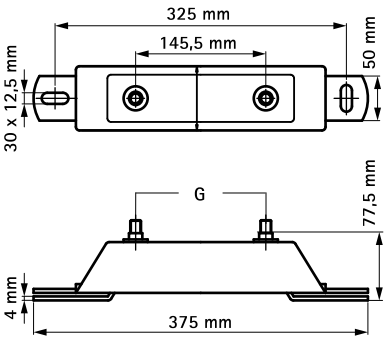

Complementary

201 BIS RapidStrut® Fixing System
110 BIS dB-FiX® 80 / 200 Mounting Kit
112 BIS dB-FiX® 200 Stand-off Fixing Kit

EN-SG 02/2022- Subject to modifications

BIS dB-FiX® 80 Fixing Point Assembly Kit

(E 05 30)

for noise insulation fixing point 15 - 65 mm



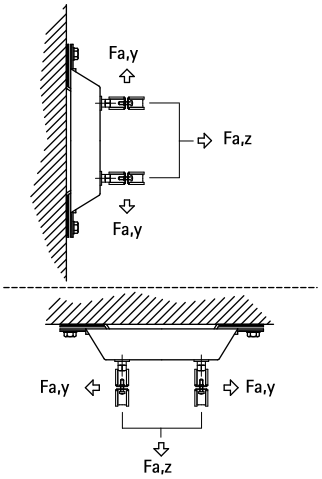

Features and Benefits

- very stable
- material: steel
- zinc plated
- noise insulation by moulded EPDM rubber
- sound insulating lining according DIN 4109
- consists of:
  - 1 Fixing point assembly BIS dB-FiX® 80 (Part No. 669 3 008)
  - 2 Heavy Duty Clamps HD500

Part No.	D (mm)	D (")	DN	H (mm)	h (mm)	$F_{a,z}$ (N)	$F_{a,y}$ (N)	Pack 1
2622010	15 - 19	3/8	10	108	93	3,000	2,700	1
2622015	19 - 23	1/2	15	112	95	3,000	2,700	1
2622020	25 - 30	3/4	20	119	98	3,000	2,700	1
2622025	31 - 36	1	25	131	109	3,000	2,700	1
2622032	40 - 45	1 1/4	32	140	114	3,000	2,700	1
2622040	47 - 52	1 1/2	40	147	118	3,000	2,700	1
2622050	59 - 65	2	50	160	123	3,000	2,700	1

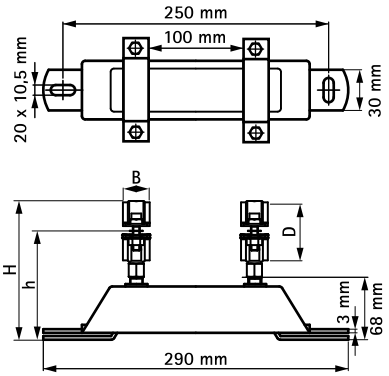

EN-SG 02/2022- Subject to modifications

BIS dB-FiX® 200 Fixing Point Assembly Kit

(E 05 35)

for noise insulation fixing point 72 - 169 mm



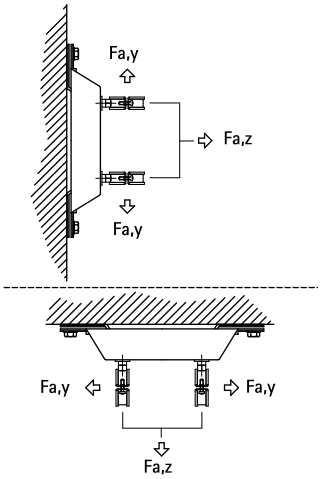

Features and Benefits

- very stable
- material: steel
- zinc plated
- noise insulation by moulded EPDM rubber
- sound insulating lining according DIN 4109
- consists of:
  - 1 Fixing point assembly BIS dB-FiX® 200 (Part No. 669 3 020)
  - 2 Heavy Duty Clamps HD500

Part No.	D (mm)	D (")	DN	H (mm)	h (mm)	$F_{a,z}$ (N)	$F_{a,y}$ (N)	Pack 1
2622065	72 - 78	2½	65	192	147	7,000	6,600	1
2622070	79 - 85	-	-	199	152	7,000	6,600	1
2622080	86 - 92	3	80	206	155	7,000	6,600	1
2622100	108 - 116	4	100	226	164	7,000	6,600	1
2622125	132 - 140	5	125	252	178	7,000	6,600	1
2622150	159 - 169	6	150	284	194	7,000	6,600	1

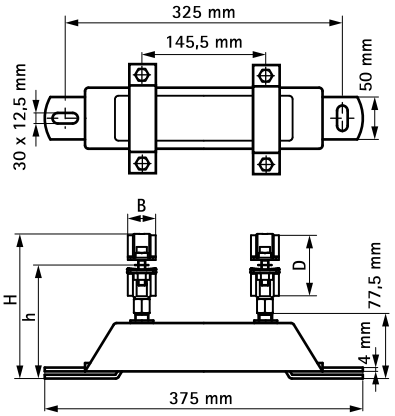

BIS dB-FiX® 80 / 200 Mounting Kit

(E 05 40)

for noise insulation fixing point





Features and Benefits

- kit for pipe fixing between 2 BIS dB-Fix® Fixpoint Assemblies
- clamps fixed to plates by their flanges
- suitable for all diameters and specially for clamps > Ø 114 mm
- also used if extra stability is required
- space saving
- material: steel
- zinc plated
- consists of:
  - 2 Mounting plates
  - 4 Hexagon nuts M10
  - 4 Hexagon nuts M12

Part No.	s (mm)	d1 (mm)	d2 (mm)	k (mm)	k1 (mm)	Pack 1	Pack 2
6693100	5.0	14.0	12.0	225.5	145.5	1	25

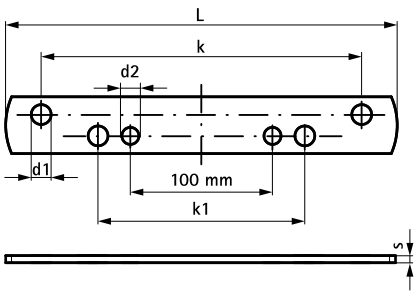

Complementary

106 BIS dB-FiX® 80 Fixing Point Assembly
107 BIS dB-FiX® 200 Fixing Point Assembly

EN-SG 02/2022- Subject to modifications

BIS dB-FiX® 80 Stand-off Fixing Kit

(E 05 45)

for noise insulation fixing point





Features and Benefits

- for mounting a BIS dB-FiX® fixing point console at a distance from a wall or ceiling
- material: steel
- zinc plated
- Part No. 6693808:
  - 4 Distance brackets
  - 1 dB-Fix 80 Bottom plate 1"
  - 1 Wall plate 1"
  - 2 Bolts, Nuts, Washers M10
  - 8 Hexagon nuts M12
  - 8 Washers M12

Part No.	For	Pack 1
6693808	dB-FiX® 80	5

Complementary

106 BIS dB-FiX® 80 Fixing Point Assembly
107 BIS dB-FiX® 200 Fixing Point Assembly
448 BIS Threaded Rod

Complementary

450 BIS Threaded Tube

BIS dB-FiX® 200 Stand-off Fixing Kit

(E 05 46)

for noise insulation fixing point





Features and Benefits

- for mounting a BIS dB-FiX® fixing point console at a distance from a wall or ceiling
- material: steel
- zinc plated
- Part No. 6693820:
  - 4 Adjustable support brackets
  - 1 dB-Fix 200 Bottom plate 1"
  - 1 Wall plate 1"
  - 2 Bolts, Nuts, Washers M12
  - 8 Hexagon nuts M16
  - 8 Washers M16

Part No.	For	Pack 1
6693820	dB-FiX® 200	3

Complementary

107 BIS dB-FiX® 200 Fixing Point Assembly
45 BIS Heavy Duty Clamp HD500 (BUP1000)
448 BIS Threaded Rod

Complementary

450 BIS Threaded Tube

EN-SG 02/2022- Subject to modifications

BIS dB-FiX® 80 / 200 Support Plate

(E 05 47)



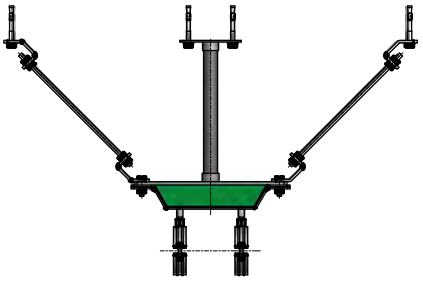

Features and Benefits

- for mounting a BIS dB-FiX® fixing point at a distance from a wall or ceiling
- to be used in combination with BIS Wall Plate CO_2 welded (Part No: 6719033)
- axial support by threaded rods in combination with BIS Adjustable Support (BUP1000)(Part No. 66588818) or BIS Threaded Rod Support (Part No. 6698015)
- CO_2 welded
- material: steel 1.0332
- zinc plated

Part No.	G	L	B (mm)	H (mm)	s (mm)	d1 (mm)	k (mm)	For	Pack 1
6698030	G1"	286 mm	35	38	8.0	13.0	250	BIS dB-FiX® 80	25
6698035	G1"	361 mm	35	38	8.0	13.0	325	BIS dB-FiX® 200	25

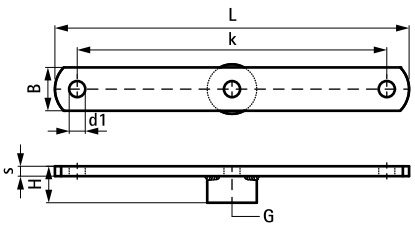

Complementary

106 BIS dB-FiX® 80 Fixing Point Assembly
107 BIS dB-FiX® 200 Fixing Point Assembly
387 BIS Wall Plate Resistance Welded

Complementary

450 BIS Threaded Tube
119 BIS Threaded Rod Support
448 BIS Threaded Rod

EN-SG 02/2022- Subject to modifications

Silentbloc Typ A M8x23mm

(E 05 05)

vibration free fixing of devices



Features and Benefits

- for vibration free fixing of devices to eg cantilever arms or rails
- to be used for pressure load only (standing mounted)
- material: vulcanized rubber, black; metal parts zinc plated
- sound insulating according DIN 4109

Part No.	G	B (mm)	h (mm)	Lm1 (mm)	Lm2 (mm)	For Rail	$F_{a,z}$ (N)	Pack 1
4125009	M8	40	30	23	23	WM1 - 30 + Strut	1,450	50

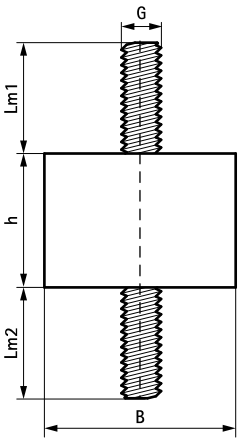

EN-SG 02/2022- Subject to modifications

Silentbloc Strut type A M8x23mm

(E 05 06)



Features and Benefits

- for vibration free fixing of devices to eg cantilever arms
- with pre-assembled Strut slide nut for quick installation
- to be used for pressure load only (standing mounted)
- material: vulcanized rubber, black; metal parts zinc plated
- sound insulating according DIN 4109

Part No.	G	B (mm)	h (mm)	Lm1 (mm)	Lm2 (mm)	For Rail	$F_{a,z}$ (N)	Pack 1	App.
4125010	M8	40	30	23	23	Strut	1,450	12	pc.

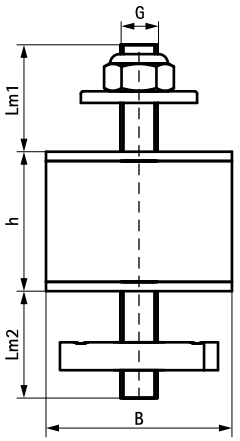

BIS Fixpoint Console 'Light' (BUP1000)

(E 05 49)



Features and Benefits

- flexible use console module for high forces up to 5 KN (depending on the situation, detailed design by technical service)
- tested as a sound-insulated fixed point with lined heavy duty clamps
- can be used as a pipe connection point in conjunction with 2 or 3 heavy-duty clamps type HD500 (up to 140 mm) or HD1501 (up to 154 mm)
- tightening torque 75 Nm for the console fixing screws
- connection to the building is recommended with metal anchors M12
- infinitely adjustable height and inclination, high corrosion protection
- material: steel 1.0332
- surface protection:
  - product is part of the BIS UltraProtect® 1000 system
  - suitable for in- and outdoor applications
  - stands min. 1,000 hours salt spray test (max. 5% red rust) according to ISO 9227

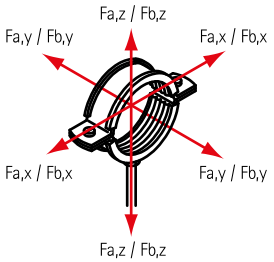

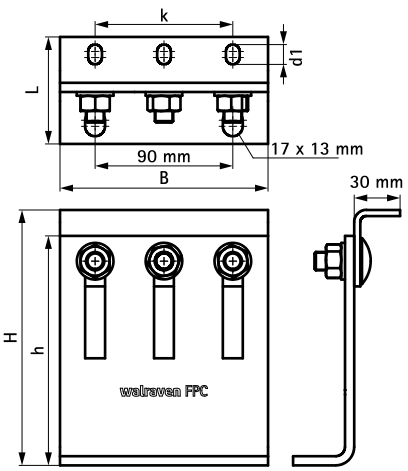

Part No.	L	B (mm)	H (mm)	h (mm)	d1 (mm)	k (mm)	Pack 1	
6698204	70 mm	136	110 - 167	150	13 x 9	90	1	*

** Depending on the situation, please contact Walraven Technical Support for advice on safe loads.*
Note! Console, Clamps and Anchors are to be ordered separately.

Complementary

25	BIS Heavy Duty Clamp HD1501 (BUP1000)
26	BIS Heavy Duty Clamp HD1501 (BUP1000)
27	BIS Heavy Duty Clamp HD1501 (BUP1000)

Complementary

45	BIS Heavy Duty Clamp HD500 (BUP1000)
46	BIS Heavy Duty Clamp HD500 (BUP1000)
47	BIS Heavy Duty Clamp HD500 (BUP1000)

EN-SG 02/2022- Subject to modifications

BIS Fixpoint Console 'Medium' (BUP1000)

(E 05 51)





Features and Benefits

- suitable for BISOFIX® Cold FixPoint Clamps (see E 05 03)
- flexible use console module for high forces (depending on the situation, detailed design by technical service)
- can be used as a pipe connection point in conjunction with 2 or 3 heavy-duty clamps type HD500 up to max. 227 mm
- tightening torque 75 Nm for the console fixing screws
- connection to the building is recommended with metal anchors M12
- infinitely adjustable height and inclination, high corrosion protection
- material: steel 1.0332
- surface protection:
  - product is part of the BIS UltraProtect® 1000 system
  - suitable for in- and outdoor applications
  - stands min. 1,000 hours salt spray test (max. 5% red rust) according to ISO 9227

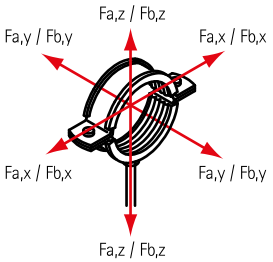

Part No.	L	B (mm)	H (mm)	h (mm)	d1 (mm)	d2 (mm)	k (mm)	k1 (mm)	$F_{a,z}$ (N)	$F_{a,y}$ (N)	$F_{a,x}$ (N)	Pack 1	
6698206	80 mm	136	153 - 268	150	15 x 11	Ø 13.0	100	90	14,300	11,500	3,200	1	*

** Depending on the situation, please contact Walraven Technical Support for advice on safe loads.*
Note! Console, Clamps and Anchors are to be ordered separately.

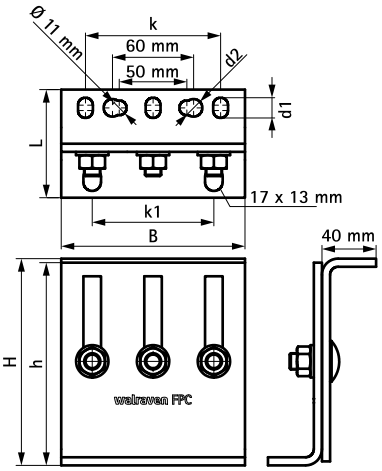

Complementary

45 BIS Heavy Duty Clamp HD500 (BUP1000)
46 BIS Heavy Duty Clamp HD500 (BUP1000)
47 BIS Heavy Duty Clamp HD500 (BUP1000)

Complementary

478 WTB1 Throughbolt Anchor
470 WDI1 Drop-in Anchor

BIS Fixpoint Console 'Heavy' (BUP1000)

(E 05 54)





Features and Benefits

- suitable for BISOFIX® Cold FixPoint Clamps (see E 05 03)
- flexible use console module for high forces (depending on the situation, detailed design by technical service)
- can be used as a pipe connection point in conjunction with 2 heavy duty clamps type HD500 from 229 mm up to max. 564 mm
- tightening torque 120 Nm for the console fixing screws
- connection to the building is recommended with metal anchors M16
- infinitely adjustable height and inclination, high corrosion protection
- material: steel 1.0332
- surface protection:
  - product is part of the BIS UltraProtect® 1000 system
  - suitable for in- and outdoor applications
  - stands min. 1,000 hours salt spray test (max. 5% red rust) according to ISO 9227

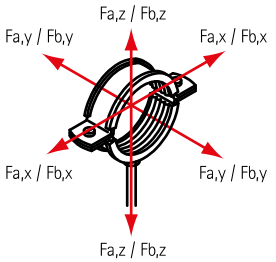

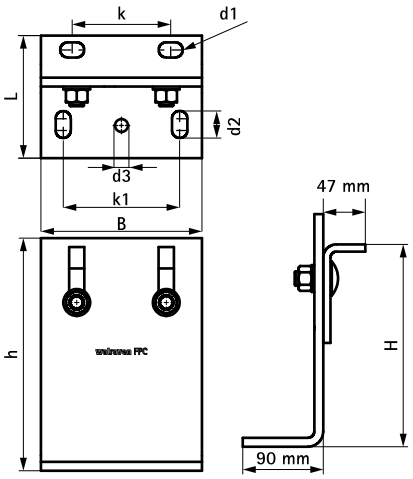

Part No.	L	B (mm)	H (mm)	h (mm)	d1 (mm)	d2 (mm)	d3 (mm)	k (mm)	k1 (mm)	$F_{a,z}$ (N)	$F_{a,y}$ (N)	$F_{a,x}$ (N)	Pack 1	
6698208	137 mm	180	226 - 333	260	27 x 17	30 x 17	Ø 17.0	110	130	10,000	9,300	3,700	1	*

** Depending on the situation, please contact Walraven Technical Support for advice on safe loads. Note! Console, Clamps and Anchors are to be ordered separately.*

Complementary

45 BIS Heavy Duty Clamp HD500 (BUP1000)
46 BIS Heavy Duty Clamp HD500 (BUP1000)
47 BIS Heavy Duty Clamp HD500 (BUP1000)

Complementary

478 WTB1 Throughbolt Anchor
470 WDI1 Drop-in Anchor

EN-SG 02/2022- Subject to modifications

BIS Threaded Rod Support

(E 05 60)



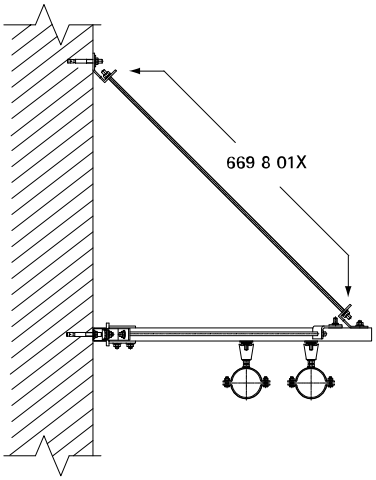

Features and Benefits

- for strengthening rail constructions with the aid of threaded rods
- also suitable for bracing cantilever arms
- material: steel 1.0332
- zinc plated

Part No.	L1 (mm)	L2 (mm)	L3 (mm)	B (mm)	s (mm)	d1 (mm)	d2 (mm)	a (°)	a2 (°)	$F_{a,z}$ (N)	Pack 1
6698013	31	31	42	35	6.0	Ø 13.0	Ø 13.0	90	45	3,000	25
Max. allowed load ($F_{a,z}$) under an angle of 45°.											

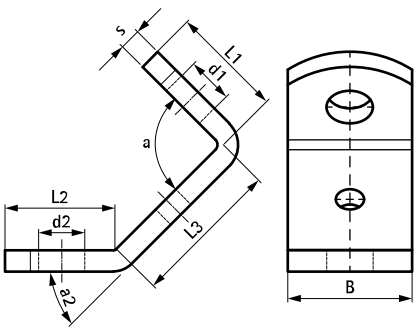

BIS Expansion Joint

(E 10 15)

fixing with sliding assemblies



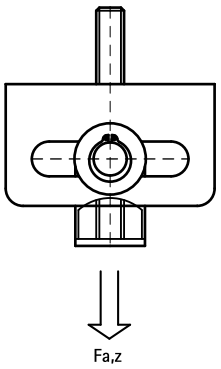

Features and Benefits

- for installations with a length extension, for guiding pipe clamps
- low space requirement for the ceiling; can only be used for ceiling mounting (hanging)
- economical solution when low expansion
- compatible with all Walraven rail systems
- material: steel
- zinc plated

Part No.	G1	G2	$F_{a,z}$ (N)	Pack 1
6653310	M10	M8/10	1,500	50

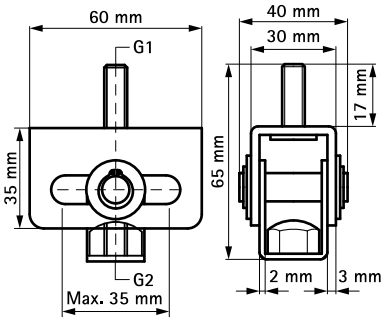

Complementary

446 BIS Stud Bolt
448 BIS Threaded Rod
470 WDI1 Drop-in Anchor

Complementary

496 WCA1 Ceiling Anchor

Alternative

121 BIS Expansion Device (BUP1000)
122 BIS Expansion Device

EN-SG 02/2022- Subject to modifications

BIS Expansion Device (BUP1000)

(E 10 35)

fixing with sliding assemblies



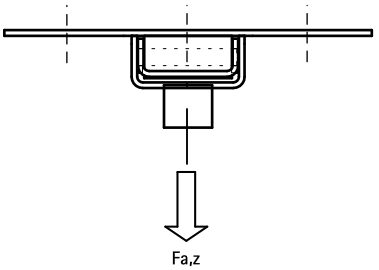

Features and Benefits

- single support for pipe expansion
- secure parts ensure mechanism will not slide out
- fix directly on the building structure or in combination with rail systems
- suitable for ceiling mounting (suspended) and floor mounting (standing mounted)
- very low installation height, useful in small spaces
- a variety of connection possibilities, can be combined with Bifix® G2 or HD1501 Pipe Clamps
- material: metal parts made of steel; plastic parts made of POM (polyoxymethylene)
- friction coefficient μ = 0.18; Sliding friction coefficient μ = 0.14
- surface protection:
  - product is part of the BIS UltraProtect® 1000 system
  - suitable for in- and outdoor applications
  - stands min. 1,000 hours salt spray test (max. 5% red rust) according to ISO 9227
- temperature resistance up to +120 °C

Part No.	Model	G	L	B (mm)	H (mm)	s (mm)	d1 (mm)	k (mm)	SL (max.) (mm)	$F_{a,z}$ (N)	Pack 1
6668310	Single	M8/10	130 mm	200	30.5	4.0	21 x 11	96	100	3,500	5
6668312	Single	M10/12	130 mm	200	32.5	4.0	21 x 11	96	100	4,800	5
6668316	Single	M16	130 mm	200	30.5	4.0	21 x 11	96	100	4,800	5

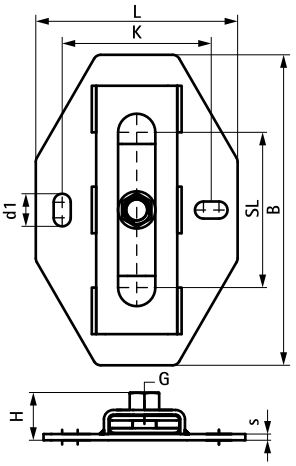

Complementary

446 BIS Stud Bolt
448 BIS Threaded Rod
478 WTB1 Throughbolt Anchor

Alternative

123 BIS Expansion Guide Assembly (BUP1000)

BIS Expansion Device

(E 10 22)

fixing with sliding assemblies



666 3 410



666 3 412



666 3 416



666 3 210

Features and Benefits

- single and double brackets for pipe extensions
- fix directly on the building structure or in combination with rail systems
- suitable for ceiling mounting (suspended) and floor mounting (standing mounted)
- a variety of connection possibilities, can be combined with all pipe clamps
- material: metal parts made of steel; plastic parts made of POM (polyoxymethylene) / PPS (polyamphenylensulfid)
- friction coefficient μ = 0.18; Sliding friction coefficient μ = 0.14
- zinc plated
- temperature resistance up to +120 °C
- Part No. 6663416: temperature resistance up to +240 °C

Part No.	Model	G	B (mm)	H (mm)	d1 (mm)	k (mm)	SL (max.) (mm)	$F_{a,z}$ (N)	$F_{a,z\,2}$ (N)	Pack 1
6663410	Single	M8/10	37	29	8.4	-	42	700	700	50
6663412	Single	M10/12	150	46	20 x 12.5	100	80	2,300	2,300	10
6663416	Single	M12/16	188	57	20 x 12.5	157	120	9,000	5,000	10
6663210	Double	M10/12	150	46	20 x 12.5	100	140	2,300	2,300	10

$F_{a,z}$ = standing mounted; $F_{a,z\,2}$ = suspended.

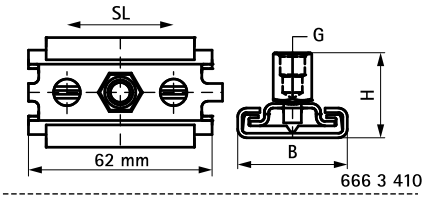

666 3 410

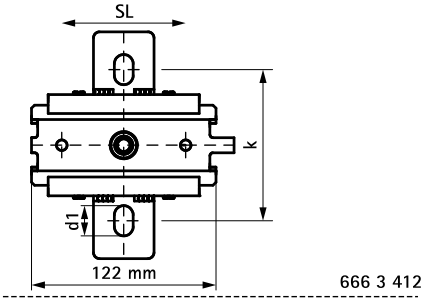

666 3 412

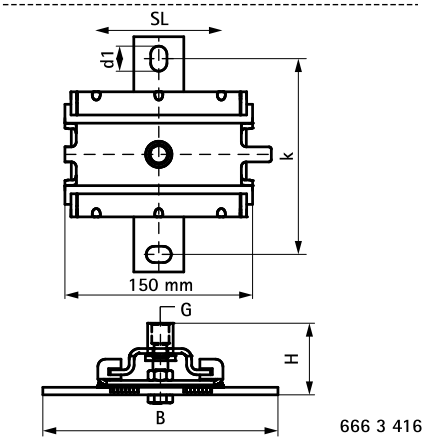

666 3 416

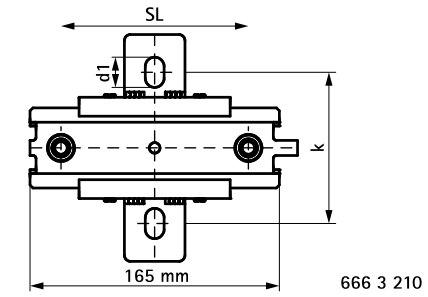

666 3 210

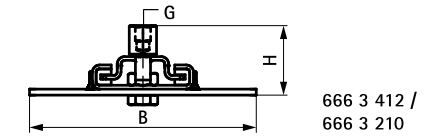

666 3 412 /
666 3 210

EN-SG 02/2022- Subject to modifications

Complementary

446 BIS Stud Bolt
448 BIS Threaded Rod
470 WDI1 Drop-in Anchor

Complementary

478 WTB1 Throughbolt Anchor

Alternative

121 BIS Expansion Device (BUP1000)
123 BIS Expansion Guide Assembly (BUP1000)

BIS Expansion Guide Assembly (BUP1000)

(E 10 40)

fixing with sliding assemblies



666 8 612 666 8 813

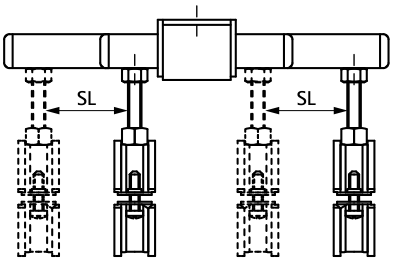

Features and Benefits

- stable and safe double support for pipe expansion
- fix directly on the building structure or in combination with rail systems
- suitable for ceiling mounting (suspended) and floor mounting (standing mounted)
- tapped with different sized threads on opposing faces
- a variety of connection possibilities, can be combined with Bifix® G2 or HD1501 Pipe Clamps
- material: metal parts made of steel; plastic parts made of PE
- surface protection:
  - product is part of the BIS UltraProtect® 1000 system
  - suitable for in- and outdoor applications
  - stands min. 1,000 hours salt spray test (max. 5% red rust) according to ISO 9227

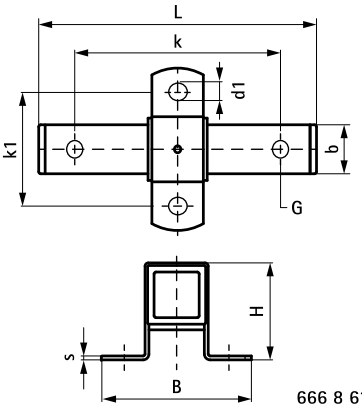

666 8 612

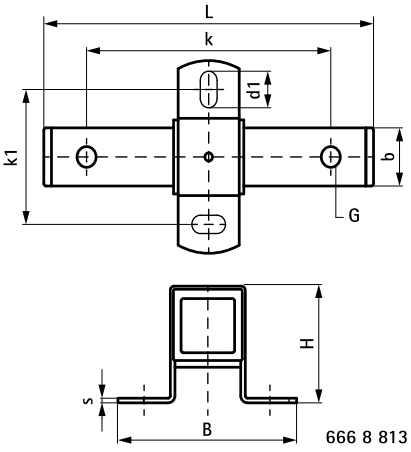

666 8 813

Part No.	Type	G	L	B (mm)	H (mm)	b (mm)	s (mm)	d1 (mm)	k (mm)	k1 (mm)	SL (max.) (mm)	$F_{a,z}$ (N)	Pack 1
6668612	FG2	M10/12	170 mm	135	46	35	3.0	Ø 13	120	100	60	1,500	5
6668813	FG3	Ø 13.0 mm / 17.0 mm	255 mm	146	90	40	5.0	20 x 13	200	100	120	7,500	5

Complementary

446 BIS Stud Bolt
448 BIS Threaded Rod
478 WTB1 Throughbolt Anchor

Alternative

121 BIS Expansion Device (BUP1000)

BIS Slide Block GFRP (BUP1000)

(E 10 45)





Features and Benefits

- flexible sliding element for pipe extensions
- can also be used as a cross-slide
- suitable for all BIS RapidStrut® Fixing Rail excluding DS5
- suitable for ceiling mounting (hanging) and floor mounting (standing mounted)
- very low installation height, little space requirement
- movement freely selectable, limitations and securing by U-washers
- material: hanger nut made of steel; plastic part made of Polyamide 6 (PA6), 30% glass fiber reinforced
- sliding friction coefficient μ = 0,30
- surface protection:
  - product is part of the BIS UltraProtect® 1000 system
  - suitable for in- and outdoor applications
  - stands min. 1,000 hours salt spray test (max. 5% red rust) according to ISO 9227
- temperature resistance from -30 °C to +90 °C

Part No.	G	L	B (mm)	H (mm)	$F_{a,z}$ (N)	Pack 1
6662810	M10	70 mm	35	22	1,550	20

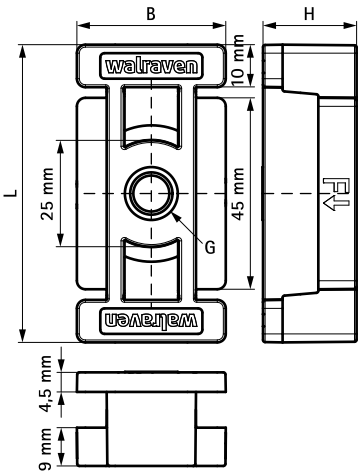

Complementary

207 BIS RapidStrut® Fixing Rail (BUP1000)
206 BIS RapidStrut® Fixing Rail (pg)
249 BIS Strut Washer - U-shaped (BUP1000)

Alternative

122 BIS Expansion Device
120 BIS Expansion Joint

EN-SG 02/2022- Subject to modifications

F BIS Suspension Components for Air Ducts



BIS Clamps with Lining for Spiral Ducts
BIS Rubber Absorption Piece 126



BIS Ventilation Duct Connectors
BIS Ventilation Duct Connector 127

BIS Rubber Absorption Piece

(F05 25)

noise insulation for rail



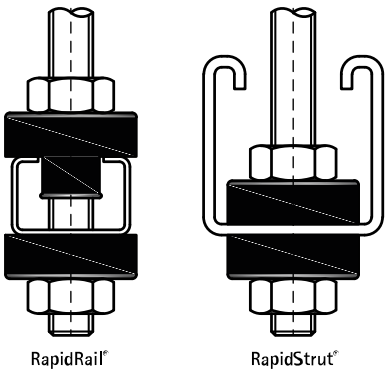

Features and Benefits

- noise insulating element
- e.g. for noise insulating suspension of fixing rail in combination with threaded rod M10
- rubber absorption pieces are suitable to use with RapidStrut® Rails and RapidRail® Profiles
- material: metal parts made of steel; silent block made of TPE rubber, black
- zinc plated
- noise insulation up to 16dB(A) on average, when combined with RapidRail® 27x18, compared to directly installed clamps

Part No.	Type	R	B (mm)	H (mm)	$F_{a,z}$ (N)	Pack 1
4125007	M	10.1	30	19.5	-	100
4125008	F	10.1	30	10.0	-	100
4125006	M + F	10.1	30	23.0	600	50

The maximum allowed load can be higher under strict conditions and is depending on the frequency, for conditions and details please consult our technical department.

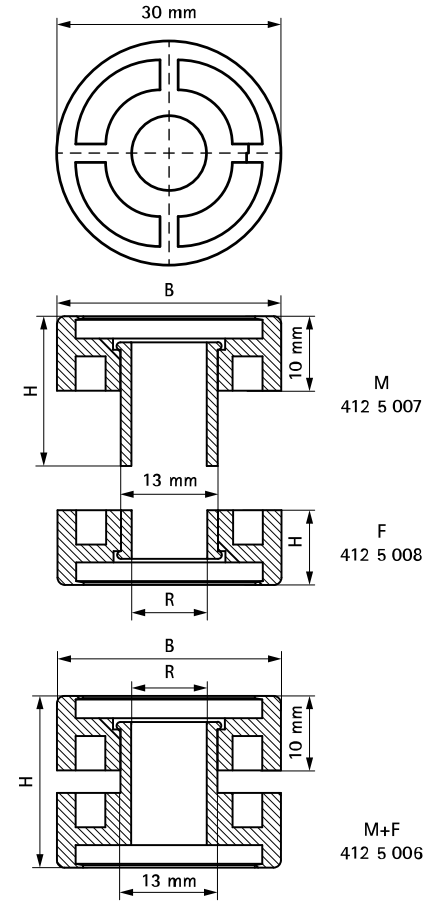

Complementary

206 BIS RapidStrut® Fixing Rail (pg)
209 BIS RapidStrut® Fixing Rail Double (pg)
133 RapidRail® Fixing Rail

Complementary

448 BIS Threaded Rod

EN-SG 02/2022- Subject to modifications

BIS Ventilation Duct Connector

(F 30 05)



Features and Benefits

- material: steel 1.0332
- zinc plated

Part No.	Pack 1
4125020	200

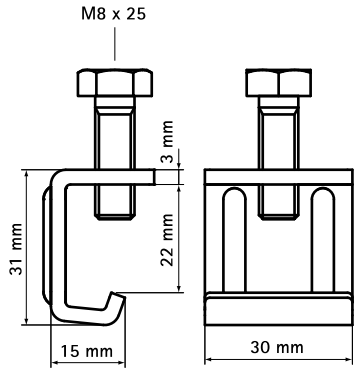

G BIS RapidRail® Fixing System

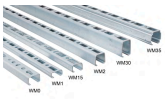

BIS Fixing Rail

BIS RapidRail® Fixing Rail 133
BIS Fixing Rail 135
BIS Fixing Rail 136
BIS Fixing Rail - WM3 137
BIS Fixing Rail - U-shaped 138
BIS Fixing Rail - L-shaped 139



BIS Cantilever Arms

BIS RapidRail® Cantilever Arm (BUP1000) 140
BIS Cantilever Arm - WM3 (BUP1000) 141
BIS Cantilever Arm - U-shaped 142



BIS Wall Plates

BIS RapidRail® Wall Plate 143
BIS RapidRail® Wall Plate (Hinged) 144
BIS Wall Plate - WM3 145



BIS Rail Props and Brackets

BIS Rail Prop 146
BIS Rail Prop - WM3 147
BIS RapidRail Construction Bracket (zp) 148
BIS Rail Junction Angle Bracket (hdg) 149
BIS RapidRail Corner Bracket (zp) 150
BIS Rail Junction Assembly 151
BIS RapidRail® Rail Suspension Bracket 152



BIS Console Kits and Gasmeter Holder

BIS Console Kit ISO 153
BIS Console Kit ISO - with Bridging 154
BIS Console Kit Clim ISO 155
BIS Gas Meter Holder 156



BIS Rail Accessories for Pipe Fixing

BIS RapidRail® Slide Nut 157
BIS Slide Nut 651 158
BIS Slide Nut 651D - WM3 159
BIS Square Slide Nut 160
BIS Angle Formed Slide Nut 161
BIS Double Slide Nut 162
BIS Double Slide Nut - WM3 163
BIS RapidRail® Hammerfix 164
BIS RapidRail® Ball Swivel Hanger 165
BIS Tee-Bolt Assembly 166
BIS Tee-Bolt Assembly - WM3 167
BIS Washer (Flat) (BUP1000) 168
BIS Washer (Flat) 169
BIS Washer (Flat) - WM3 170
BIS Washer (U-shaped) 171
BIS Washer (U-shaped) - WM3 172
BIS RapidRail® Basket Retainer Clip 173



BIS Rail Connectors

BIS RapidRail® Connector 90° 174
BIS RapidRail® Connector 135° 175
BIS Rail Connector with Slide Nuts 176
BIS Rail Connector 90° with Slide Nut - WM3 177
BIS Rail Connector 178
BIS Rail Connector 90° - WM3 179
BIS RapidRail® Connector 180
BIS Rail Connector - WM3 181
BIS RapidRail® T- and X-Connector 182
BIS RapidRail® Cross Connector 183



BIS Beam Clamps and Rail Fixing Sets

BIS RapidRail® Beam Clamp 185
BIS Rail Beam Clamp 186
BIS Rail Beam Clamp - WM3 187
BIS 'Light Duty' Beam Clamp 188
BIS Rail WM0 'Light Duty' Set 189
BIS Rail WM1 'Light Duty' Set 190

EN-SG 02/2022- Subject to modifications

G BIS RapidRail® Fixing System

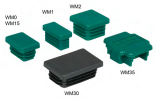

BIS Rail Finish Material

BIS Rail End Cap **191**
BIS Rubber Strip **192**
BIS Rail End Cap - WM3 **193**

EN-SG 02/2022- Subject to modifications

BIS RapidRail®

Fast and easy fixing



Insert, lock, done

The accessories are pre-assembled and delivered 'ready to use' to site. The plastic spring allows the slide nut to be fixed easily into the rail, saving up to 40% fixing time.



Complete range

The BIS RapidRail® System offers a complete and effective range of rail profiles, cantilever arms and accessories for pipe fixing and rail construction.



Fast and easy fixing

BIS RapidRail® WM15, WM30 and WM35 have a unique hole pattern allowing the accessories to be fitted on both sides of the rail quickly and easily.

System BIS RapidRail®

Table of rail section properties

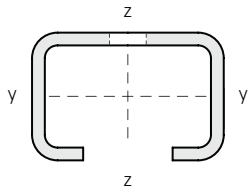

Type	Weight (kg / m)	Moment of inertia cm⁴		Section modulus cm³	
		Iy	Iz	Wy	Wz
WM0	0.58	0.28	0.91	0.30	0.67
WM1	0.85	0.28	1.47	0.35	0.98
WM15	0.77	0.49	1.66	0.49	1.10
WM2	1.31	1.71	2.65	1.08	1.76
WM30	1.67	4.57	3.79	2.03	2.53
WM35	1.65	3.62	5.03	1.81	2.65

See Rail load tables for safe working loads.

Perforation pattern for fixing to ceiling or wall.

Distance between rail end and first hole is always equal. All sizes in mm.

WM0 (27 x 18 mm)

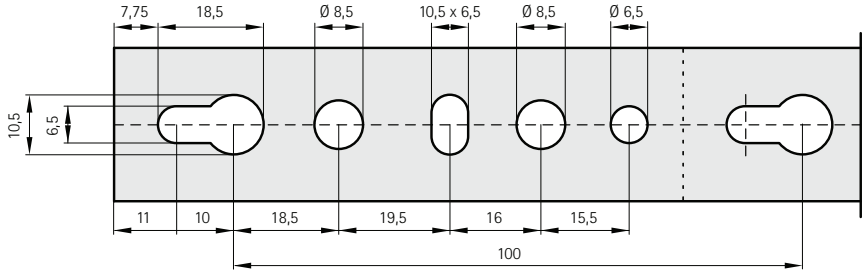

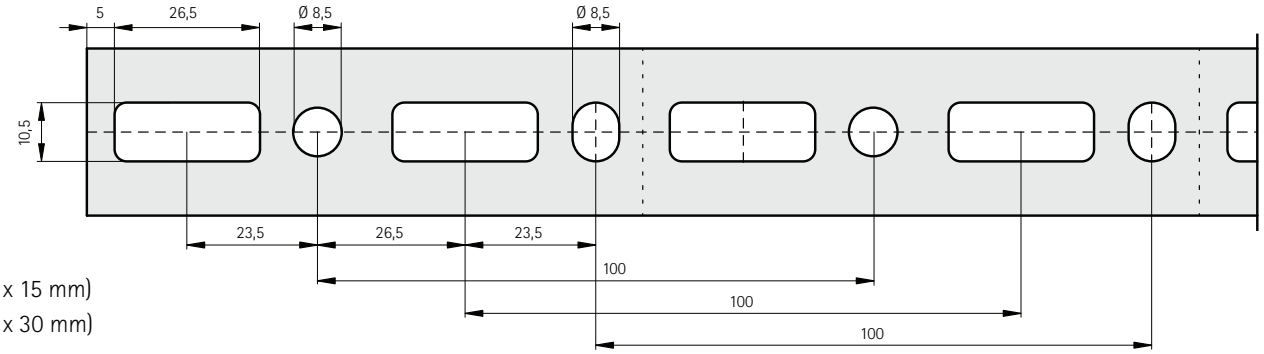

WM1 (30 x 15 mm)
WM2 (30 x 30 mm)

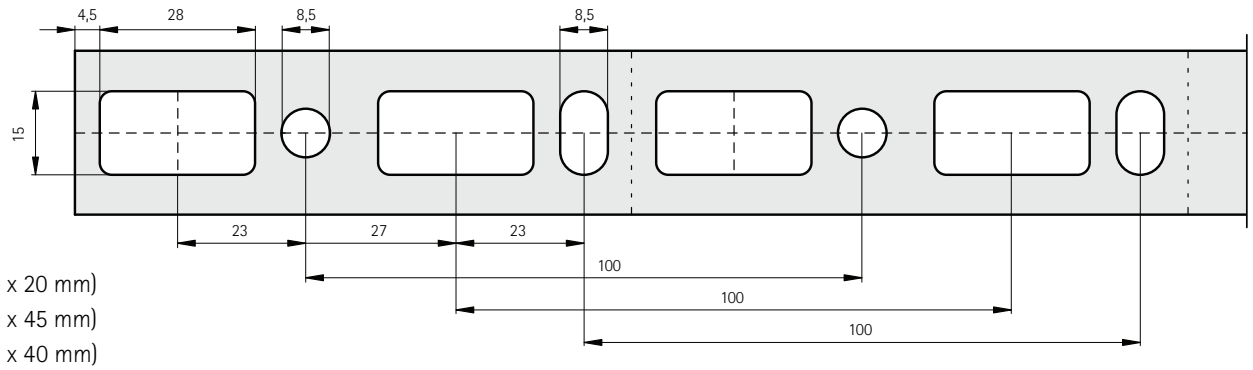

WM15 (30 x 20 mm)
WM30 (30 x 45 mm)
WM35 (38 x 40 mm)

RapidRail® Fixing Rail

(G 04 05)

suspension and support

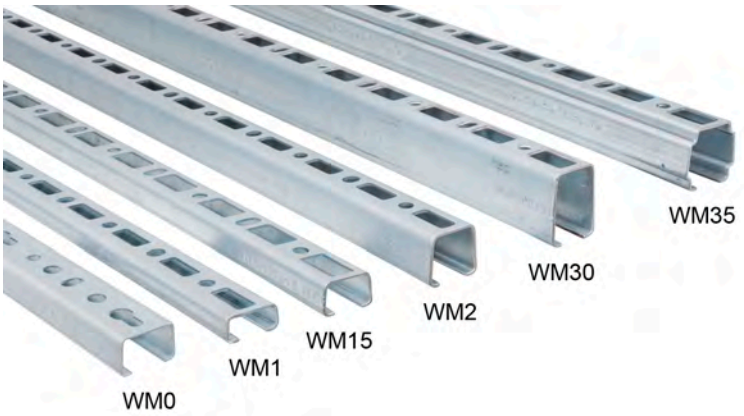

Features and Benefits

- C-profile
- for a quick and easy fixing
- with continuous perforation
- distance between rail end and first hole is always equal
- a continuous graduated centimetre scale on one side
- unique perforation on rail WM15, WM30 and WM35 allows for hanging on both sides
- material: steel 1.0242
- pre-galvanized
- for more information about the max. allowed load ($F_{a,z}$) please refer to the loading tables or our online datasheet 'Technical Details BIS RapidRail®'

RAL GÜTEZEICHEN ROHRBEFESTIGUNG
RAL-GZ 655/C
Cert.Nr. 2012-03

Part No.	Type	L	B (mm)	H (mm)	s (mm)	S (mm)	RAL	BndS	BndL	App.
6505000	WM0	2 m	27	18	1.20	15	RAL[1]	20	400	m.
6505300	WM0	3 m	27	18	1.20	15	RAL[1]	30	600	m.
6505600	WM0	6 m	27	18	1.20	15	RAL[1]	60	1.200	m.
6505001	WM1	2 m	30	15	2.00	15	RAL[1]	20	480	m.
6505301	WM1	3 m	30	15	2.00	15	RAL[1]	30	720	m.
6505601	WM1	6 m	30	15	2.00	15	RAL[1]	60	720	m.
6505515	WM1	0.5 m	30	15	2.00	15	RAL[1]	1	-	pc.
6505015	WM15	2 m	30	20	1.75	15	RAL[1]	20	480	m.
6505315	WM15	3 m	30	20	1.75	15	RAL[1]	30	720	m.
6505615	WM15	6 m	30	20	1.75	15	RAL[1]	60	720	m.
6505002	WM2	2 m	30	30	2.00	15	RAL[1]	20	400	m.
6505302	WM2	3 m	30	30	2.00	15	RAL[1]	30	600	m.
6505602	WM2	6 m	30	30	2.00	15	RAL[1]	60	600	m.
6505030	WM30	2 m	30	45	2.00	15	RAL[1]	20	240	m.
6505630	WM30	6 m	30	45	2.00	15	RAL[1]	60	360	m.
6505235	WM35	2 m	38	40	2.00	15	-	20	100	m.
6505335	WM35	3 m	38	40	2.00	15	-	30	150	m.
6505635	WM35	6 m	38	40	2.00	15	-	60	300	m.

RAL[1] = tested, certified and monitored by a third party according to RAL-GZ 655/C.
For detailed technical information about our RAL marked products, please see the RAL datasheet in our web catalogue.
For more information about the max. allowed load ($F_{a,z}$) please refer to the loading tables or our online datasheet 'Technical Details BIS RapidRail®'.

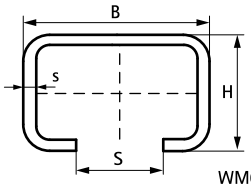

WM0, 1, 15, 2, 30

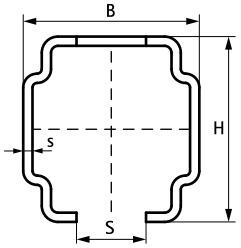

WM35

Complementary

157 BIS RapidRail® Slide Nut
164 BIS RapidRail® Hammerfix
191 BIS Rail End Cap

Complementary

174 BIS RapidRail® Connector 90°
175 BIS RapidRail® Connector 135°

Technical Details Rail WM3

System WM3 – Table of rail section properties

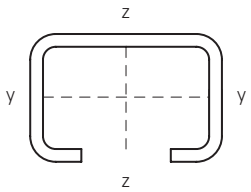

Type	Weight (kg / m)	Moment of inertia cm⁴		Section modulus cm³	
		Iy	Iz	Wy	Wz
WM3	3.22	8.17	15.95	3.95	6.38
See Rail load tables for safe working loads.					

Perforation pattern for fixing to ceiling or wall.

Distance between rail end and first hole is always equal.

WM3 (50 x 40 mm)

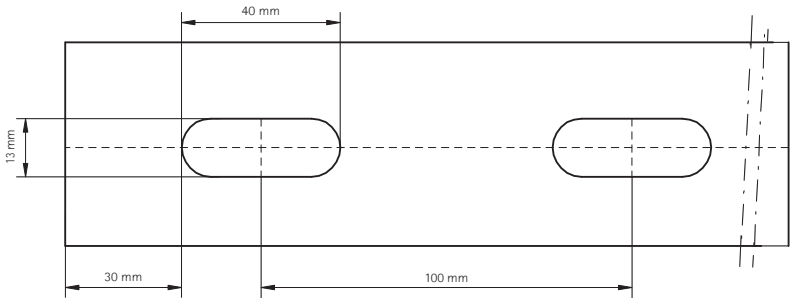

EN-SG 02/2022- Subject to modifications

BIS Fixing Rail

(G 04 07)



Features and Benefits

- C-profile
- for a quick and easy fixing
- with continuous perforation
- distance between rail end and first hole is always equal
- a continuous graduated centimetre scale on one side
- material: steel 1.0226
- yield strength 240 N/mm^2

Part No.	L	B (mm)	H (mm)	s (mm)	S (mm)	BndS	BndL	App.
6505017	2 m	28	30	1.75	15	20	400	m.
6505317	3m	28	30	1.75	15	30	600	m.

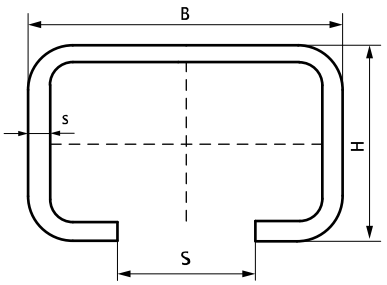

BIS Fixing Rail

(G 04 15)

suspension and support



Features and Benefits

- for a quick and easy fixing
- with continuous perforation
- distance between rail end and first hole is always equal

Part No.	L	s (mm)	S (mm)	From Rail	ST	BndS	App.
6504020	2 m	1.00	10.5	20x10	pre-galvanized	24	m.
6504025	2 m	1.50	16.5	35x18	pre-galvanized	24	m.
6504028	2 m	1.50	23.0	40x20	pre-galvanized	24	m.
Part No. 6504XXX: pre-galvanized.							

EN-SG 02/2022- Subject to modifications

BIS Fixing Rail - WM3

(G 04 40)

suspension and support



Features and Benefits

- C-profile
- for a quick and easy fixing
- with continuous perforation
- distance between rail end and first hole is always equal
- pre-galvanized
- material: steel 1.0242

Part No.	L	B (mm)	H (mm)	s (mm)	S (mm)	BndS	BndL	App.
6505003	3 m	50	40	3.0	18	3	192	m.
6505603	6 m	50	40	3.0	18	6	384	m.

For more information about the max. allowed load ($F_{a,z}$) please refer to the loading tables or our online datasheet 'Technical Details BIS RapidRail®'.

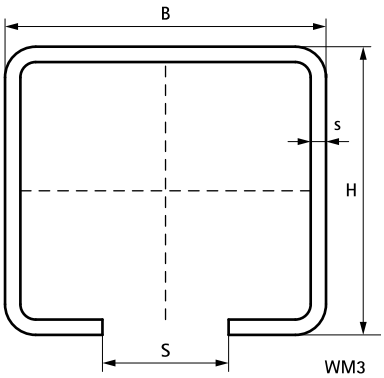

Complementary

193 BIS Rail End Cap - WM3

BIS Fixing Rail - U-shaped

(G 04 45)

suspension and support



Features and Benefits

- for a quick and easy fixing
- with continuous perforation
- a continuous graduated centimetre scale on one side
- material: steel
- pre-galvanized

Part No.	L	B (mm)	H (mm)	s (mm)	S (mm)	BndS	BndL	App.
6505293	2 m	30	30	2.0	26	16	480	m.
6505294	2 m	30	30	3.0	24	16	480	m.

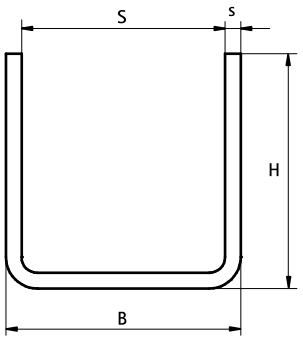

EN-SG 02/2022- Subject to modifications

BIS Fixing Rail - L-shaped

(G 04 50)

suspension and support



Features and Benefits

- for a quick and easy fixing
- with continuous perforation
- a continuous graduated centimetre scale on one side
- pre-galvanized
- material: steel

Part No.	Type	L	B (mm)	H (mm)	s (mm)	S (mm)	BndS	BndL	App.
6505297		2 m	30	30	2.0	28	16	720	m.
6505298		2 m	30	30	3.0	27	16	720	m.

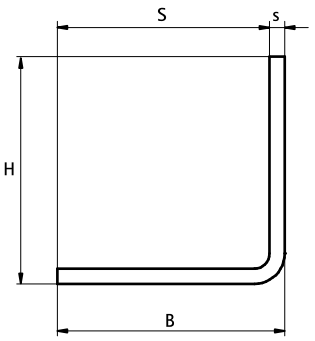

BIS RapidRail® Cantilever Arm (BUP1000)

(G 10 05)

fixing to wall or ceiling

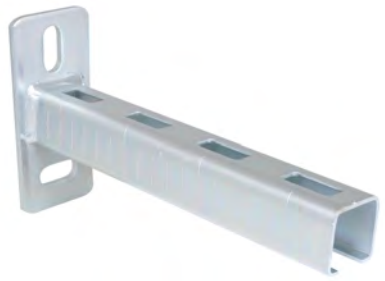

Features and Benefits

- wall plate with welded C-profile
- perfectly suitable for hanging to the ceiling
- slots at 90° to each other to simplify fixing
- CO_2 welded
- a continuous graduated centimetre scale on one side
- unique perforation on rail WM15, WM30 and WM35 allows for hanging on both sides
- material: steel
- surface protection:
  - product is part of the BIS UltraProtect® 1000 system
  - suitable for in- and outdoor applications
  - stands min. 1,000 hours salt spray test (max. 5% red rust) according to ISO 9227
- for more information about the max. allowed load ($F_{a,z}$) please refer to the loading tables or our online datasheet 'Technical Details BIS RapidRail®'

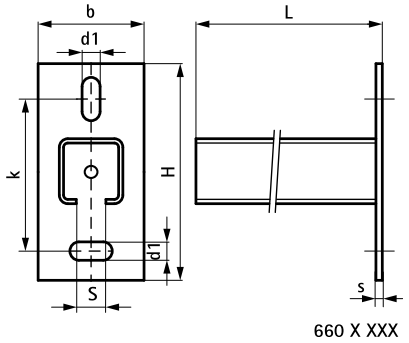

660 X XXX

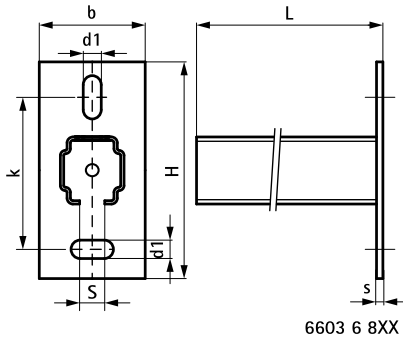

6603 6 8XX

Part No.	L	B (mm)	H (mm)	s (mm)	d1 (mm)	S (mm)	k (mm)	From Rail	Pack 1
6603015	150 mm	38	110	4.0	25 x 11	15	70	WM0 - 27x18	20
6603019	200 mm	38	110	4.0	25 x 11	15	70	WM0 - 27x18	20
6603030	300 mm	38	110	4.0	25 x 11	15	70	WM0 - 27x18	20
6603050	500 mm	38	110	4.0	25 x 11	15	70	WM0 - 27x18	20
6603115	150 mm	48	110	5.0	25 x 11	15	70	WM1 - 30x15	20
6603120	200 mm	48	110	5.0	25 x 11	15	70	WM1 - 30x15	20
6603125	250 mm	48	110	5.0	25 x 11	15	70	WM1 - 30x15	20
6603130	300 mm	48	110	5.0	25 x 11	15	70	WM1 - 30x15	20
6603715	150 mm	38	110	4.0	25 x 11	15	70	WM15 - 30x20	20
6603720	200 mm	38	110	4.0	25 x 11	15	70	WM15 - 30x20	20
6603725	250 mm	38	110	4.0	25 x 11	15	70	WM15 - 30x20	20
6603215	150 mm	48	110	5.0	25 x 11	15	70	WM2 - 30x30	20
6603220	200 mm	48	110	5.0	25 x 11	15	70	WM2 - 30x30	10
6603225	250 mm	48	110	5.0	25 x 11	15	70	WM2 - 30x30	10
6603230	300 mm	48	110	5.0	25 x 11	15	70	WM2 - 30x30	10
6603240	400 mm	48	110	5.0	25 x 11	15	70	WM2 - 30x30	20
6603245	450 mm	48	110	5.0	25 x 11	15	70	WM2 - 30x30	20
6603250	500 mm	48	110	5.0	25 x 11	15	70	WM2 - 30x30	20
66036820	200 mm	48	130	5.0	25 x 11	15	90	WM35 - 38x40	10
66036825	250 mm	48	130	5.0	25 x 11	15	90	WM35 - 38x40	10
66036835	350 mm	48	130	5.0	25 x 11	15	90	WM35 - 38x40	10
66036840	400 mm	48	130	5.0	25 x 11	15	90	WM35 - 38x40	10
66036850	500 mm	48	130	5.0	25 x 11	15	90	WM35 - 38x40	10
66036860	600 mm	48	130	5.0	25 x 11	15	90	WM35 - 38x40	1
66036875	750 mm	48	130	5.0	25 x 11	15	90	WM35 - 38x40	1
66036805	1,050 mm	48	130	5.0	25 x 11	15	90	WM35 - 38x40	1

For more information about the max. allowed load ($F_{a,z}$) please refer to the loading tables or our online datasheet 'Technical Details BIS RapidRail®'.

Complementary

146 BIS Rail Prop
157 BIS RapidRail® Slide Nut
164 BIS RapidRail® Hammerfix

Complementary

166 BIS Tee-Bolt Assembly
191 BIS Rail End Cap
425 BIS Washer (BUP1000)

EN-SG 02/2022- Subject to modifications

BIS Cantilever Arm - WM3 (BUP1000)

(G 10 15)

fixing to wall or ceiling



Features and Benefits

- wall plate with welded C-profile
- perfectly suitable for hanging to the ceiling
- slots at 90° to each other to simplify fixing
- CO_2 welded
- material: steel
- surface protection:
  - product is part of the BIS UltraProtect® 1000 system
  - suitable for in- and outdoor applications
  - stands min. 1,000 hours salt spray test (max. 5% red rust) according to ISO 9227

Part No.	L	B (mm)	H (mm)	s (mm)	d1 (mm)	S (mm)	k (mm)	From Rail	Pack 1
6603335	350 mm	70	160	8.0	26 x 14	18	115	WM3 - 50x40	10
6603355	550 mm	70	160	8.0	26 x 14	18	115	WM3 - 50x40	1

For more information about the max. allowed load ($F_{a,z}$) please refer to the loading tables or our online datasheet 'Technical Details BIS RapidRail®'.

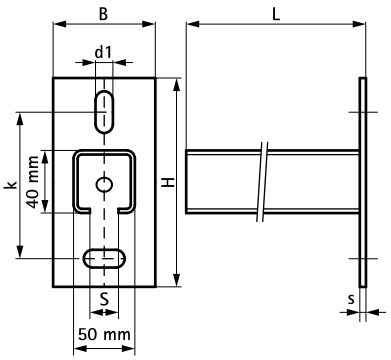

Complementary

147 BIS Rail Prop - WM3
193 BIS Rail End Cap - WM3

EN-SG 02/2022- Subject to modifications

BIS Cantilever Arm - U-shaped

(G 10 20)

fixing to wall or ceiling

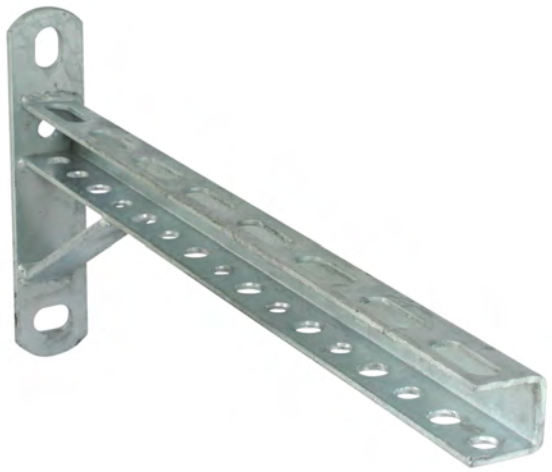

Features and Benefits

- U-profile welded on wall plate
- slots at 90° to each other to simplify fixing
- material: steel
- hot dip galvanized

Part No.	Model	L	B (mm)	H (mm)	s (mm)	s1 (mm)	d1 (mm)	k (mm)	From Rail	Pack 1
6601911	With prop	255 mm	40	230	5.0	3.0	20 x 13	190	U-rail	5
6601912	With prop	305 mm	40	230	5.0	3.0	20 x 13	190	U-rail	5
6601913	With prop	405 mm	40	230	5.0	3.0	20 x 13	190	U-rail	5
6601914	With prop	605 mm	40	230	5.0	3.0	20 x 13	190	U-rail	5
6601915	With prop	805 mm	40	400	5.0	3.0	20 x 13	360	U-rail	5

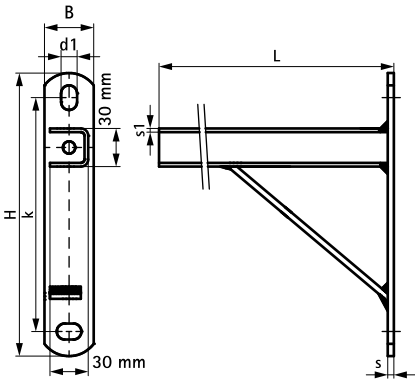

EN-SG 02/2022- Subject to modifications

BIS RapidRail® Wall Plate

(G 15 05)

fixing to wall

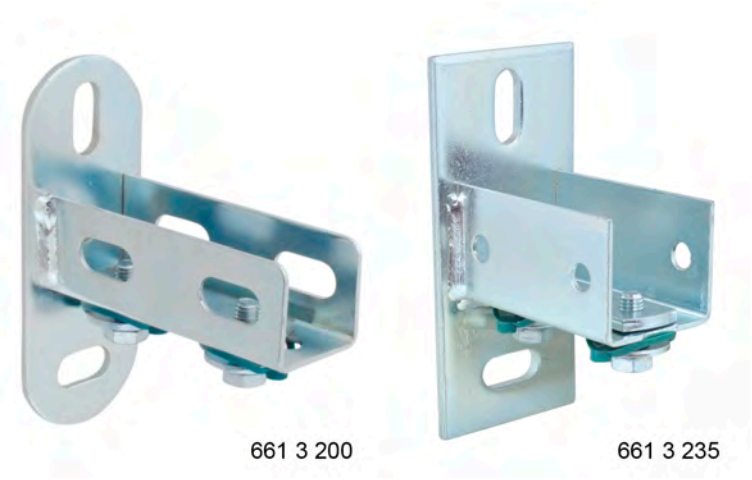

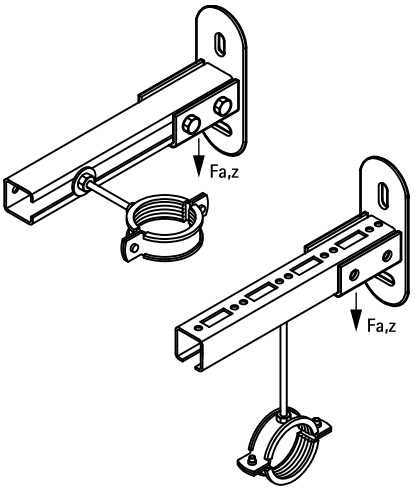

Features and Benefits

- flexible base plate for rails
- for wall fixing of rail
- rail can be fixed with slot downwards or sideways
- Part No. 6613200: suitable for WM0, 1, 15, 2, 30
- Part No. 6613235: suitable for WM35
- slots at 90° to each other to simplify fixing
- CO_2 welded
- with pre-assembled BIS RapidRail® Sliding nut(s) for a quick fixing, and retains assembly in place before final tightening
- material: metal parts made of steel 1.0332; spring(s) made of POM (polyoxymethylene), green
- zinc plated

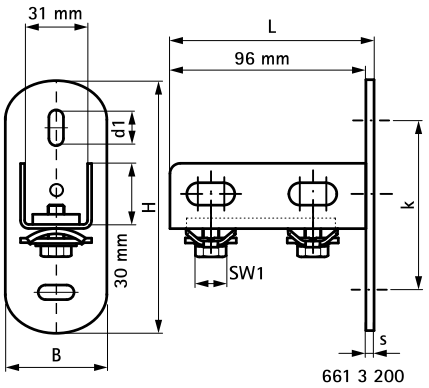

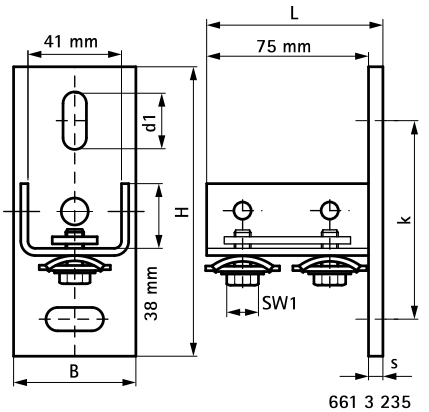

Part No.	L	B (mm)	H (mm)	s (mm)	d1 (mm)	k (mm)	SW1 (mm)	$T_{(max.)}$ (Nm)	For Rail	$F_{a,z}$ (N)	Pack 1
6613200	100 mm	50	123	4.0	25 x 11	83	13	15.0	WM0 - 30	2,850	25
6613235	80 mm	60	133	5.0	25 x 11	93	13	15.0	WM35	2,850	25

Complementary

133 RapidRail® Fixing Rail

BIS RapidRail® Wall Plate (Hinged)

(G 15 10)

fixing to wall

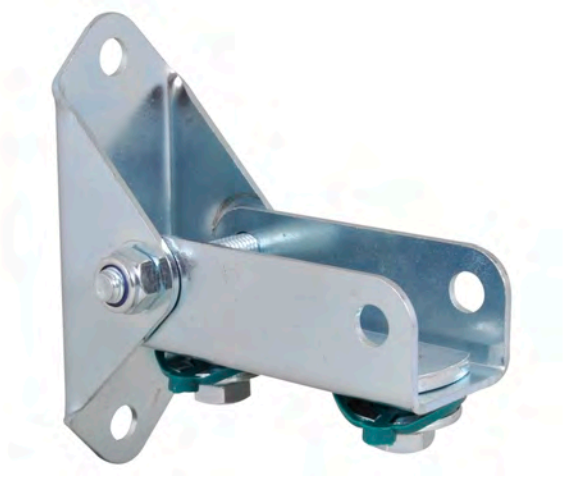

Features and Benefits

- wall plate with hinging U-profile
- also used to strengthen rail constructions
- for fixing of rail to sloping walls
- Part No. 6613250: suitable for WM1, 15, 2, 30
- material: steel
- zinc plated

Part No.	$T_{(max.)}$ (Nm)	For Rail	Pack 1
6613250	15.0	WM1 - 30	20

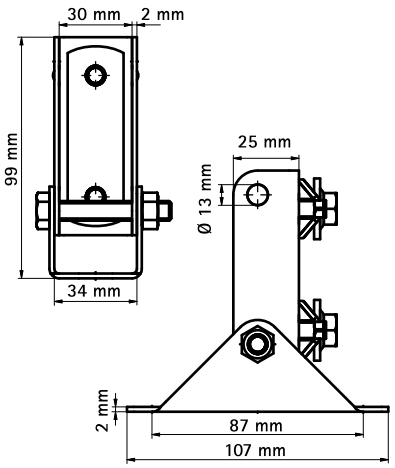

Complementary

133 RapidRail® Fixing Rail

EN-SG 02/2022- Subject to modifications

BIS Wall Plate - WM3

(G 15 20)

fixing to wall



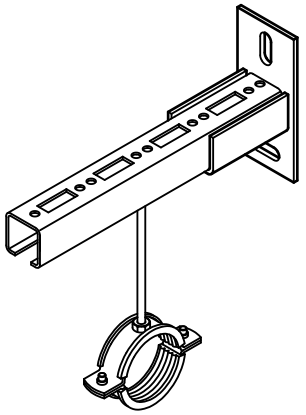

Features and Benefits

- flexible base plate for rails
- slots at 90° to each other to simplify fixing
- with pre-assembled slide nuts
- material: steel
- zinc plated

Part No.	For Rail	Pack 1
6613300	WM3	10

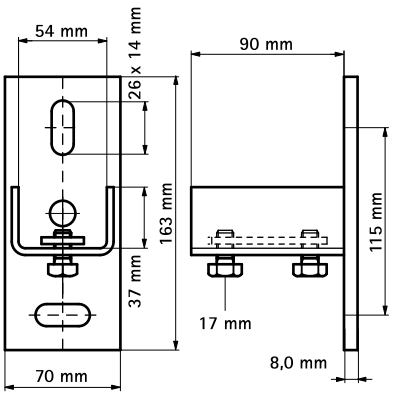

Complementary

137 BIS Fixing Rail - WM3

BIS Rail Prop

(G 20 05)

reinforcement of cantilever arm



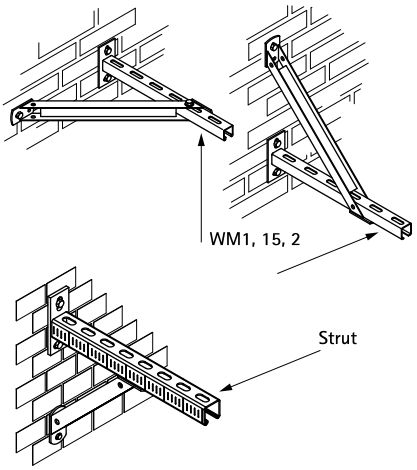

Features and Benefits

- 45° support bracket
- for fixing support under, top or on side of a cantilever arm
- also used to strengthen rail constructions
- cantilever arm of WM30 not suitable for 'run-through fixing'
- suitable for rail WM0, 1, 15, 2, 30
- CO_2 welded
- material: steel
- zinc plated

Part No.	H (mm)	For Rail	Pack 1
6628220	250	WM0 - 30	10
6628230	350	WM0 - 30	10
Rail Props for WM35 Rail? See Part No. 66288530.			

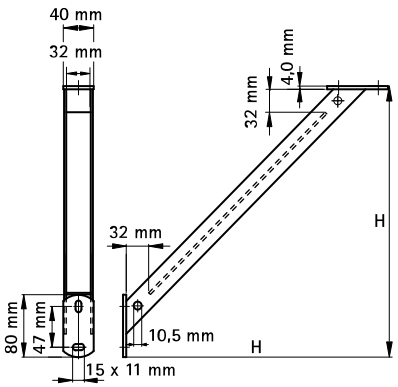

Complementary

133 RapidRail® Fixing Rail
140 BIS RapidRail® Cantilever Arm (BUP1000)

EN-SG 02/2022- Subject to modifications

BIS Rail Prop – WM3

(G 20 10)

reinforcement of cantilever arm



Features and Benefits

- 45° support bracket
- for fixing support under, top or on side of a cantilever arm
- also used to strengthen rail constructions
- CO_2 welded
- material: steel
- zinc plated

Part No.	For Rail	Pack 1
6623326	WM3	8

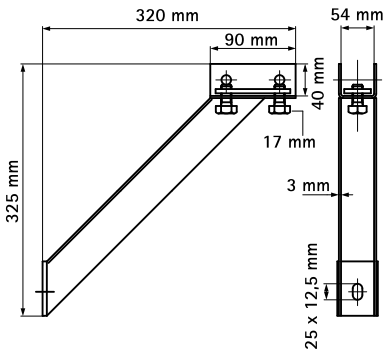

Complementary

137 BIS Fixing Rail - WM3

EN-SG 02/2022- Subject to modifications

BIS RapidRail Construction Bracket (zp)

(G 20 15)

to make BIS RapidRail® fabrications

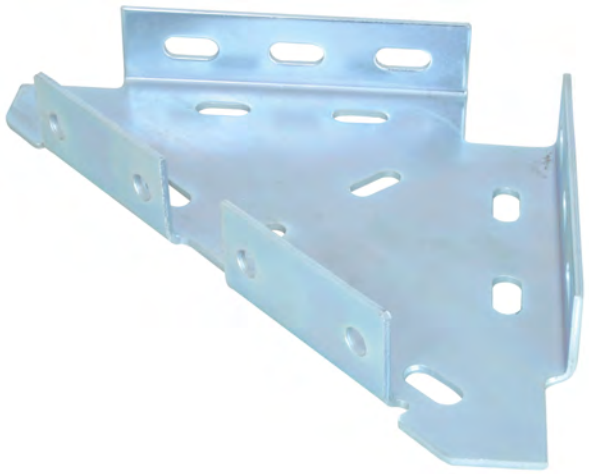

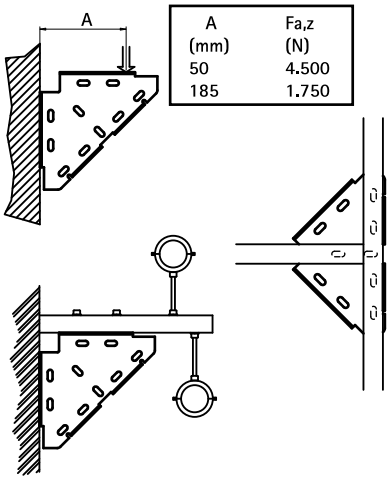

Features and Benefits

- one-part support
- for fixing support under, top or on side of a cantilever arm
- also used to strengthen rail constructions
- suitable for rail WM0, 1, 15, 2, 30
- material: steel
- zinc plated

Part No.	For Rail	Pack 1
6593010	WM0 - 30	10
Rail Junction Angle Bracket for WM35 Rail? See Part No. 65938020 (page H 16 20).		

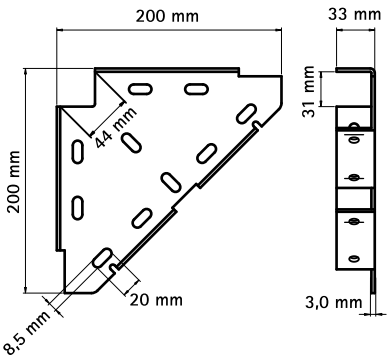

Complementary
133 RapidRail® Fixing Rail

Alternative
150 BIS RapidRail Corner Bracket (zp)

EN-SG 02/2022- Subject to modifications

BIS Rail Junction Angle Bracket (hdg)

(G 20 20)

to make BIS RapidRail® fabrications



Features and Benefits

- one-part support
- for fixing support under, top or on side of a cantilever arm
- also used to strengthen rail constructions
- suitable for rail WM1, 15, 2, 30
- material: steel
- hot dip galvanized

Part No.	For Rail	Pack 1
6661110	WM1 - 30	25

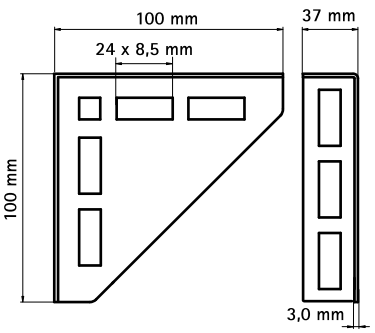

Complementary

133 RapidRail® Fixing Rail

BIS RapidRail Corner Bracket (zp)

(G 20 25)

to make BIS RapidRail® fabrications



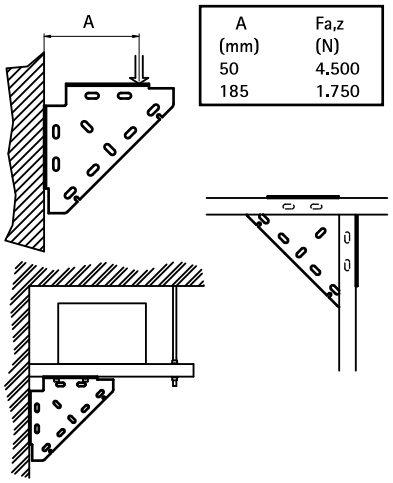

Features and Benefits

- one-part support
- for fixing support under, top or on side of a cantilever arm
- also used to strengthen rail constructions
- suitable for rail WM0, 1, 15, 2, 30
- material: steel
- zinc plated

Part No.	For Rail	Pack 1
6603010	WM0 - 30	10
Corner Bracket for WM35 Rail? See Part No. 6603020 (page H 16 40).		

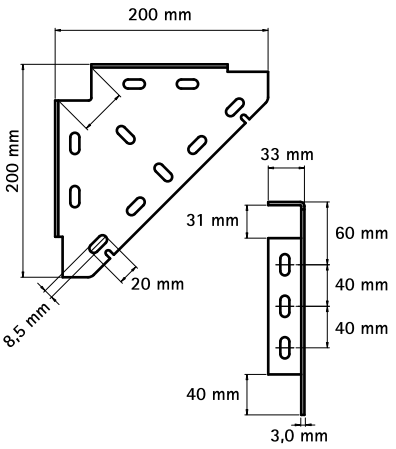

Complementary
133 RapidRail® Fixing Rail

Alternative
148 BIS RapidRail Construction Bracket (zp)

EN-SG 02/2022- Subject to modifications

BIS Rail Junction Assembly

(G 20 35)

fixing to steel beam





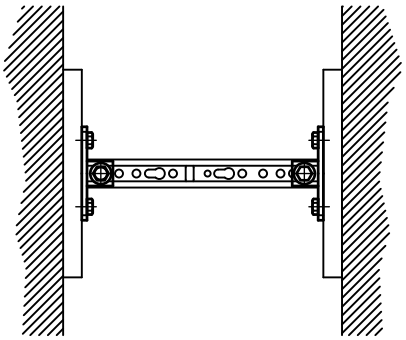

Features and Benefits

- for a solid fixing to steel construction without the need for welding or drilling
- always use 2 beam clamps per fixing
- also suitable for fixing in risershafts
- suitable for rail WM0, 1, 15, 2, 30, 35
- material: steel
- zinc plated

Part No.	$T_{(max.)}$ (Nm)	For Rail	Pack 1
6613820	15.0	WM0 - 35	50

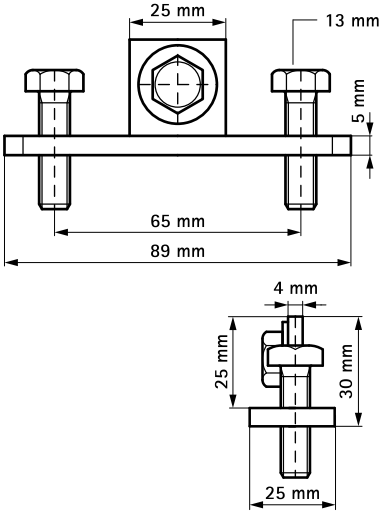

Complementary

133 RapidRail® Fixing Rail

EN-SG 02/2022- Subject to modifications

BIS RapidRail® Rail Suspension Bracket

(G 20 40)

fixing of rail to stud bolt



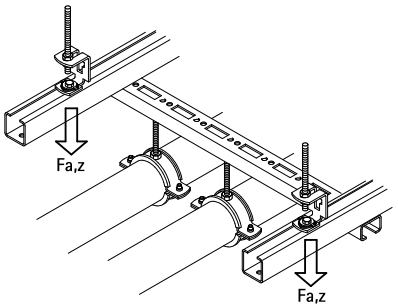

Features and Benefits

- connector with pre-assembled BIS RapidRail® Slide nut(s)
- suitable for rail WM0, 1, 15, 2, 30, 35
- ready-to-use pre-assembled for a quick fixing, and retains assembly in place before final tightening
- with pre-assembled BIS RapidRail® Sliding nut(s) for a quick fixing, and retains assembly in place before final tightening
- stud bolt with upturned nut hooked in easily because of cross-shaped hole
- material: metal parts made of steel 1.0332; spring(s) made of POM (polyoxymethylene), green
- zinc plated

RAL GÜTEZEICHEN ROHRBEFESTIGUNG
RAL-GZ 655/D
Cert.Nr. 2012-09

Part No.	$T_{(max.)}$ (Nm)	For Rail	$F_{a,z}$ (N)	$F_{a,x}$ (N)	RAL	Pack 1
6793008	15.0	WM0 - 35	1,600	79	RAL[1]	50

RAL[1] = tested, certified and monitored by a third party according to RAL-GZ 655/D in combination with Rail WM1, 2, 15 and 30.
For detailed technical information about our RAL marked products, please see the RAL datasheet in our web catalogue.

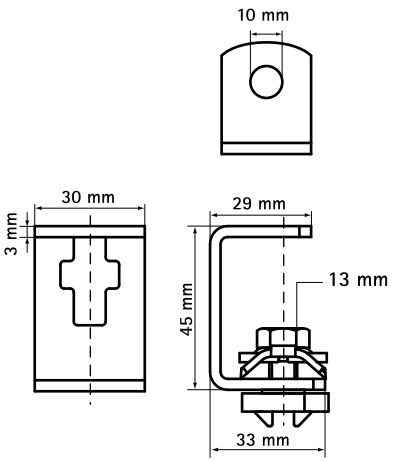

Complementary
133 RapidRail® Fixing Rail

EN-SG 02/2022- Subject to modifications

BIS Console Kit ISO

(G 25 05)

wall fixing of appliances

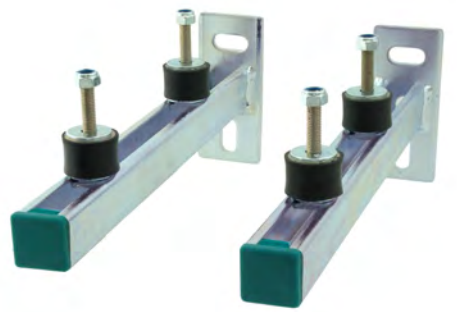

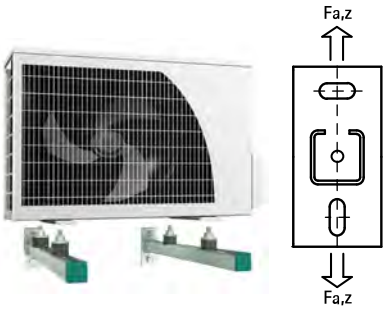

Features and Benefits

- universal fixing kit
- for wall fixing of water pumps, compressors and other light duty machinery
- vibration isolators pre-assembled with slide nut, washer and hexagon head lock-nut
- material: steel
- zinc plated
- noise insulation by use of vibration isolators (support made of vulcanized rubber)
- consists of:
  - 2 Cantilever arms
  - 4 Vibration isolators
  - 2 Rail End Caps
  - 1 Mounting kit

Part No.	L	$T_{(max.)}$ (Nm)	From Rail	$F_{a,z}$ (N)	Pack 1
6923230	300 mm	15.0	WM2	1,200	4
6923240	400 mm	15.0	WM2	700	6
6923250	500 mm	15.0	WM2	500	1

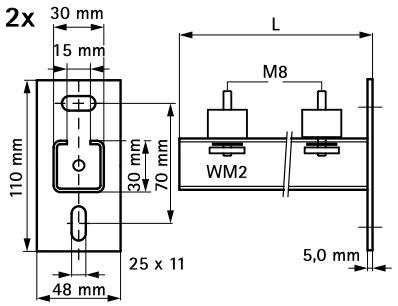

BIS Console Kit ISO – with Bridging

(G 25 10)

wall fixing of appliances

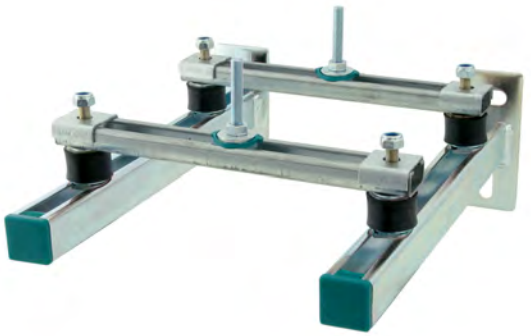

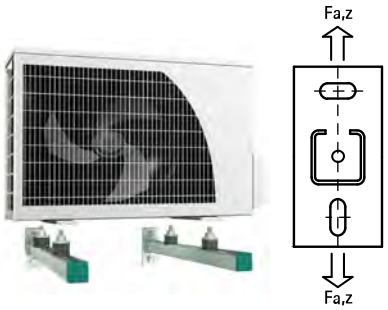

Features and Benefits

- universal fixing kit
- for wall fixing of water pumps, compressors and other light duty machinery
- bridging rail for fixing of devices with 2 fixing holes
- vibration isolators pre-assembled with slide nut, washer and hexagon head lock-nut
- material: steel
- zinc plated
- noise insulation by use of vibration isolators (support made of vulcanized rubber)
- consists of:
  - 2 Cantilever arms
  - 2 bridgings of rail WM1 (30x15 mm)
  - 4 Vibration isolators
  - 2 Slide tee-bolt assemblies
  - 2 Rail End Caps
  - 1 Mounting kit

Part No.	L	$T_{(max.)}$ (Nm)	From Rail	$F_{a,z}$ (N)	Pack 1
6923235	300 mm	15.0	WM2	1,200	4
6923245	400 mm	15.0	WM2	700	6

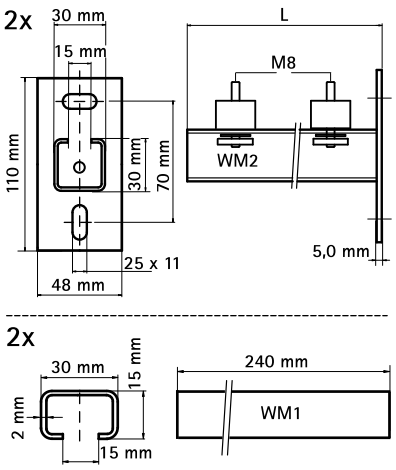

EN-SG 02/2022- Subject to modifications

BIS Console Kit Clim ISO

(G 25 15)

wall fixing of appliances



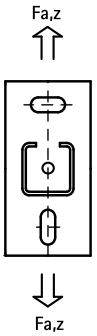

Features and Benefits

- universal fixing kit
- for wall fixing of airconditioners, heaters, compressors and other heavy duty material
- wall rail for extra height adjustability and/or simplifying fixing to unequal surface
- vibration isolators pre-assembled with slide nut, washer and hexagon head lock-nut
- material: steel
- zinc plated
- noise insulation by use of vibration isolators (support made of vulcanized rubber)
- consists of:
  - 2 Cantilever arms
  - 2 lengths of Strut 41x21
  - 4 Vibration isolators
  - 2 Rail End Caps
  - 1 Mounting kit

Part No.	L	$T_{(max.)}$ (Nm)	From Rail	$F_{a,z}$ (N)	Pack 1
6901745	450 mm	15.0	WM2	600	4
6901752	500 mm	15.0	WM35	1,000	1

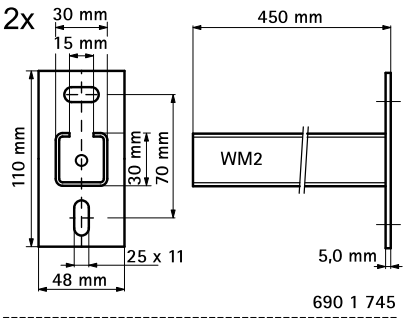

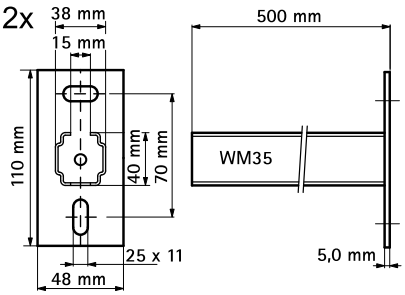

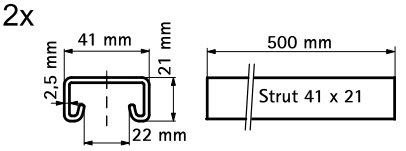

BIS Gas Meter Holder

(G 25 20)

fixing of gas meter 30 - 35 mm





Features and Benefits

- universal fixing kit
- for wall fixing of a gas meter
- slots at 90° to each other to simplify fixing
- cantilever arm: CO_2 welded
- material: steel
- zinc plated
- consists of:
  - 2 Cantilever arms
  - 2 Clamps BIS Bifix® 1301 with lining
  - 4 Star plugs
  - 1 Mounting kit

Part No.	D (mm)	D (")	L	From Rail	Pack 1
4923035	30 - 35	1	200 mm	WM0 - 27x18	1
4923135	30 - 35	1	200 mm	WM1 - 30x15	1

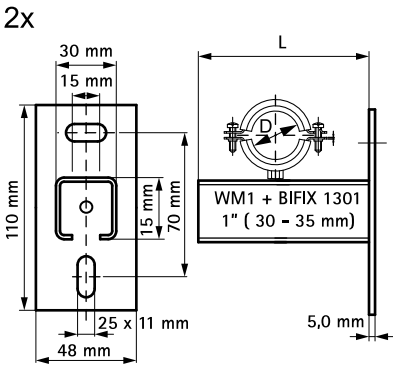

EN-SG 02/2022- Subject to modifications

BIS RapidRail® Slide Nut

(G 30 05)

fixing to BIS RapidRail®



Features and Benefits

- slide nut with washer and BIS RapidRail® spring
- suitable for rail WM0, 1, 15, 2, 30, 35
- ready-to-use pre-assembled for a quick fixing, and retains assembly in place before final tightening
- material: metal parts made of steel 1.0332; spring(s) made of POM (polyoxymethylene), green
- zinc plated

Part No.	G	s (mm)	$T_{(max.)}$ (Nm)	For Rail	$F_{a,z}$ (N)	Pack 1	Pack 2
6513106	M6	4.0	7.5	WM0 - 35	2,000	50	500
6513108	M8	5.0	15.0	WM0 - 35	2,700	50	500
6513110	M10	5.0	15.0	WM0 - 35	2,900	50	500

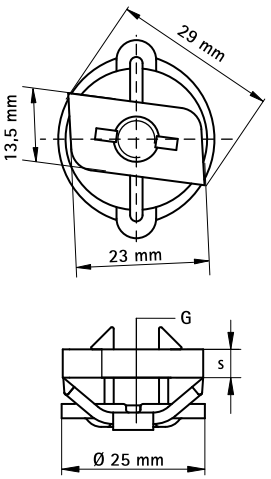

Complementary

133 RapidRail® Fixing Rail
140 BIS RapidRail® Cantilever Arm (BUP1000)

Alternative

164 BIS RapidRail® Hammerfix

EN-SG 02/2022- Subject to modifications

BIS Slide Nut 651

(G 30 10)

fixing to BIS RapidRail®

A



B



Features and Benefits

- suitable for rail WM0, 1, 15, 2, 30, 35
- Part No. 65130XX: because of shape the nut fits in rail
- Part No. 65190XX: narrowing fits in slot of rail (locking against revolving in the same direction)
- material: steel
- zinc plated

	Part No.	Type	G	$T_{(max.)}$ (Nm)	For Rail	$F_{a,z}$ (N)	Pack 1	Pack 2
A	6513006	651A	M6	7.5	WM0 (1 - 35)	-	100	2,000
A	6513008	651A	M8	15.0	WM0 (1 - 35)	-	100	2,000
A	6513010	651A	M10	15.0	WM0 (1 - 35)	-	100	2,000
B	6519006	651C	M6	7.5	WM0 - 35	3,100	50	1,000
B	6519008	651C	M8	15.0	WM0 - 35	3,100	50	2,000
B	6519010	651C	M10	15.0	WM0 - 35	3,100	50	1,000

Part No. 65130XX recommended for WM0. Moderately suitable for other railtypes.

A

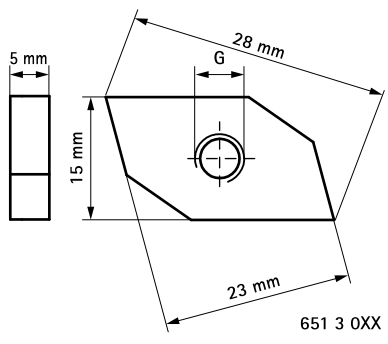

B

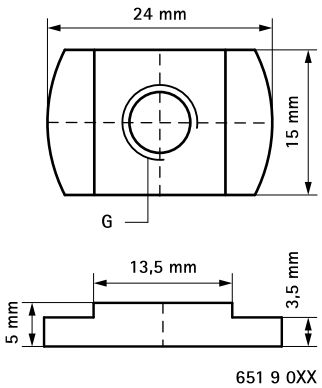

Complementary

133 RapidRail® Fixing Rail
140 BIS RapidRail® Cantilever Arm (BUP1000)

Alternative

157 BIS RapidRail® Slide Nut

EN-SG 02/2022- Subject to modifications

BIS Slide Nut 651D - WM3

(G 30 15)

fixing to BIS WM3



Features and Benefits

- material: steel
- zinc plated

Part No.	G	For Rail	$F_{a,z}$ (N)	Pack 1	Pack 2
6515008	M8	WM3	3,000	50	250
6515010	M10	WM3	3,000	50	250
6515012	M12	WM3	3,000	50	250

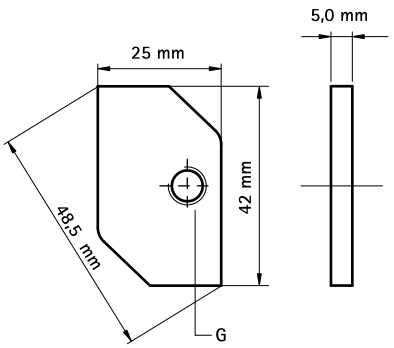

Complementary

137 BIS Fixing Rail - WM3
141 BIS Cantilever Arm - WM3 (BUP1000)

BIS Square Slide Nut

(G 30 20)

fixing to BIS RapidRail®



Features and Benefits

- suitable for rail WM1, 15, 2, 30, 35
- because of shape the nut fits in rail
- material: steel 1.0332
- zinc plated

Part No.	G	s (mm)	$T_{(max.)}$ (Nm)	For Rail	Pack 1	Pack 2
6519910	M6	4.0	7.5	WM1 - 35	50	250
6519911	M8	4.0	15.0	WM1 - 35	50	250
6519912	M10	5.0	15.0	WM1 - 35	50	250
6519913	M12	5.0	-	WM1 - 35	50	250

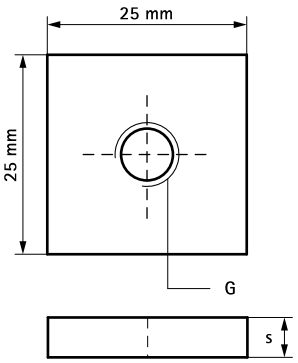

Complementary

133 RapidRail® Fixing Rail
140 BIS RapidRail® Cantilever Arm (BUP1000)

EN-SG 02/2022- Subject to modifications

BIS Angle Formed Slide Nut

(G 30 25)

fixing to BIS RapidRail®



Features and Benefits

- suitable for rail WM1, 15, 2, 30, 35
- material: steel
- zinc plated

Part No.	G	$T_{(max.)}$ (Nm)	For Rail	Pack 1	Pack 2
6513709	M8	15.0	WM1 - 35	25	250

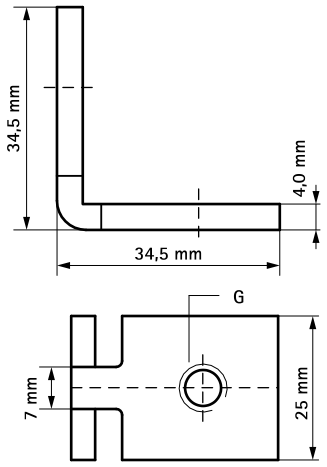

Complementary

133 RapidRail® Fixing Rail
140 BIS RapidRail® Cantilever Arm (BUP1000)

BIS Double Slide Nut

(G 30 30)

fixing to BIS RapidRail®



Features and Benefits

- suitable for rail WM0, 1, 15, 2, 30, 35
- material: steel
- zinc plated

Part No.	G	$T_{(max.)}$ (Nm)	For Rail	Pack 1	Pack 2
6513208	M8	15.0	WM0 - 35	50	250

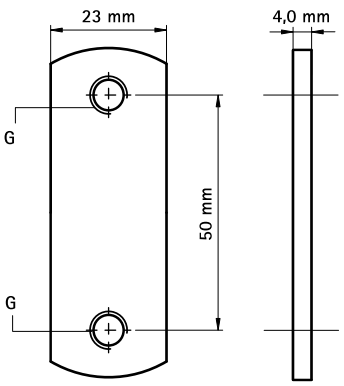

Complementary

133 RapidRail® Fixing Rail
140 BIS RapidRail® Cantilever Arm (BUP1000)

EN-SG 02/2022- Subject to modifications

BIS Double Slide Nut - WM3

(G 30 35)

fixing to BIS WM3



Features and Benefits

- material: steel 1.0332
- zinc plated

Part No.	G	For Rail	Pack 1
6515210	M10	WM3	100

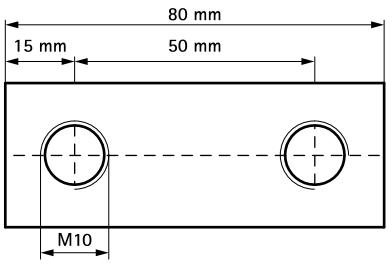

BIS RapidRail® Hammerfix

(G 30 50)

fixing to BIS RapidRail®





Features and Benefits

- slide nut with stud bolt, washer and BIS RapidRail® spring
- suitable for rail WM0, 1, 15, 2, 30, 35
- ready-to-use pre-assembled for a quick fixing, and retains assembly in place before final tightening
- material: metal parts made of steel 1.0332; spring(s) made of POM (polyoxymethylene), green
- zinc plated

Part No.	G	L	LU (mm)	s (mm)	SW1 (mm)	$T_{(max.)}$ (Nm)	For Rail	$F_{a,z}$ (N)	Pack 1	Pack 2
6523602	M6	20 mm	5	4.0	10	7.5	WM0 - 35	2,000	25	250
6523603	M6	30 mm	15	4.0	10	7.5	WM0 - 35	2,000	25	250
6523604	M6	40 mm	25	4.0	10	7.5	WM0 - 35	2,000	25	250
6523802	M8	25 mm	7	5.0	13	15.0	WM0 - 35	2,700	25	250
6523803	M8	30 mm	12	5.0	13	15.0	WM0 - 35	2,700	25	250
6523804	M8	40 mm	22	5.0	13	15.0	WM0 - 35	2,700	25	250
6523805	M8	50 mm	32	5.0	13	15.0	WM0 - 35	2,700	25	250
6523806	M8	60 mm	42	5.0	13	15.0	WM0 - 35	2,700	25	250
6523807	M8	70 mm	52	5.0	13	15.0	WM0 - 35	2,700	25	250
6523808	M8	80 mm	62	5.0	13	15.0	WM0 - 35	2,700	25	250
6523809	M8	90 mm	72	5,0	13	15.0	WM0 - 35	2,700	25	250
6523810	M8	100 mm	82	5.0	13	15.0	WM0 - 35	2,700	25	250
6523812	M8	120 mm	102	5.0	13	15.0	WM0 - 35	2,700	25	250
6523815	M8	150 mm	132	5.0	13	15.0	WM0 - 35	2,700	25	250
6523818	M8	180 mm	162	5.0	13	15.0	WM0 - 35	2,700	25	125
6523820	M8	200 mm	182	5.0	13	15.0	WM0 - 35	2,700	25	125
6523002	M10	25 mm	7	5.0	17	15.0	WM0 - 35	2,900	25	250
6523003	M10	30 mm	12	5.0	17	15.0	WM0 - 35	2,900	25	250
6523004	M10	40 mm	22	5.0	17	15.0	WM0 - 35	2,900	25	250
6523005	M10	50 mm	32	5.0	17	15.0	WM0 - 35	2,900	25	250
6523006	M10	60 mm	42	5.0	17	15.0	WM0 - 35	2,900	25	250
6523008	M10	80 mm	62	5.0	17	15.0	WM0 - 35	2,900	25	250
6523010	M10	100 mm	82	5.0	17	15.0	WM0 - 35	2,900	25	250
6523016	M10	160 mm	142	5.0	17	15.0	WM0 - 35	2,900	25	125

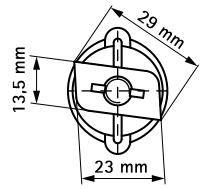

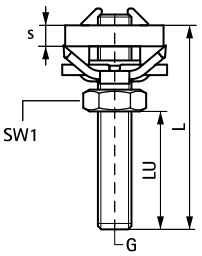

Complementary

133 RapidRail® Fixing Rail
140 BIS RapidRail® Cantilever Arm (BUP1000)

EN-SG 02/2022- Subject to modifications

BIS RapidRail® Ball Swivel Hanger

(G 30 60)

fixing to BIS RapidRail®



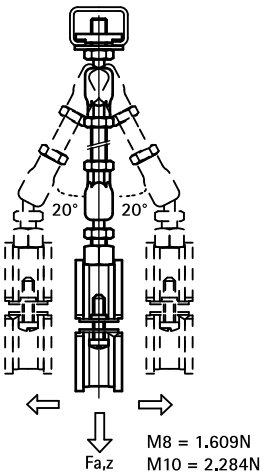

Features and Benefits

- slide nut with ball swivel hanger, washer and BIS RapidRail® spring
- recommended for metal pipes up to DN 50, plastic pipes up to DN 100
- suitable for rail WM0, 1, 15, 2, 30, 35
- ready-to-use pre-assembled for a quick fixing, and retains assembly in place before final tightening
- with inspection hole to check screw-in depth (attention: when the threaded rod is screwed-in too deep, the ball swivel is blocked)
- screw-in depth is continuously variable (see LU)
- material: metal parts made of steel 1.0332; spring(s) made of POM (polyoxymethylene), green
- zinc plated

RAL GÜTEZEICHEN ROHRBEFESTIGUNG
RAL-GZ 655/D
Cert.Nr. 2012-11

Part No.	G	L	LU (mm)	Lm1 (mm)	SW1 (mm)	$T_{(max.)}$ (Nm)	For Rail	$F_{a,x}$ (N)	RAL	Pack 1	Pack 2
6520100	M8	45 mm	18	25	10	15.0	WM0 - 35	182	RAL[1]	25	250
6520200	M8	70 mm	43	50	10	15.0	WM0 - 35	182	RAL[1]	25	250
6520110	M10	45 mm	18	25	12	15.0	WM0 - 35	226	RAL[1]	25	250
6520210	M10	70 mm	43	50	12	15.0	WM0 - 35	226	RAL[1]	25	250

RAL[1] = tested, certified and monitored by a third party according to RAL-GZ 655/D in combination with Rail WM1, 2, 15 and 30.
For detailed technical information about our RAL marked products, please see the RAL datasheet in our web catalogue.
Please note. Always use 2 ball swivel hangers and secure by additional hexagon nut (see application picture). The maximum length change that can be dealt with, depends on the fixing distance (ceiling - pipe). The height difference that occurs as a result, needs to be taken into consideration.
To be used in combination with BIS Ball Swivel Hangers. Product can be found on page E 10 05.

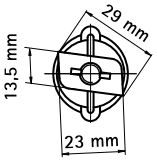

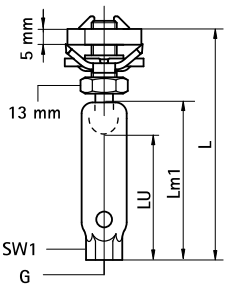

Complementary

446 BIS Stud Bolt
448 BIS Threaded Rod
133 RapidRail® Fixing Rail

Complementary

140 BIS RapidRail® Cantilever Arm (BUP1000)

EN-SG 02/2022- Subject to modifications

BIS Tee-Bolt Assembly

(G 30 68)

fixing to BIS RapidRail®



Features and Benefits

- slide nut with stud bolt and washer
- suitable for rail WM0, 1, 15, 2, 30, 35
- ready-to-use pre-assembled for a quick fixing, and retains assembly in place before final tightening
- material: steel 1.0332
- zinc plated

Part No.	G	L	LU (mm)	s (mm)	SW1 (mm)	$T_{(max.)}$ (Nm)	For Rail	$F_{a,z}$ (N)	$F_{a,z}$ (kg)	Pack 1	Pack 2	App.
6523903	M7F	30 mm	10	4.0	10	7.5	WM0 - 35	2,000	200	25	250	pc.
M7F: pitch = M7 x 1.5mm.												

Complementary

133 RapidRail® Fixing Rail
140 BIS RapidRail® Cantilever Arm (BUP1000)

EN-SG 02/2022- Subject to modifications

BIS Tee-Bolt Assembly - WM3

(G 30 70)

fixing to BIS WM3



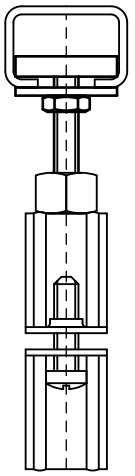

Features and Benefits

- slide nut with stud bolt and washer
- material: steel
- zinc plated

Part No.	G	L	LU (mm)	B (mm)	s (mm)	s1 (mm)	d1 (mm)	SW1 (mm)	For Rail	$F_{a,z}$ (N)	Pack 1	Pack 2
6525803	M8	30 mm	25	42	5.0	2.5	40	13	WM3	3,000	25	250
6525804	M8	40 mm	35	42	5.0	2.5	40	13	WM3	3,000	25	250
6525806	M8	60 mm	55	42	5.0	2.5	40	13	WM3	3,000	25	250
6525004	M10	40 mm	35	42	5.0	2.5	40	17	WM3	3,000	25	250
6525203	M12	30 mm	25	42	5.0	2.5	40	19	WM3	3,000	25	125

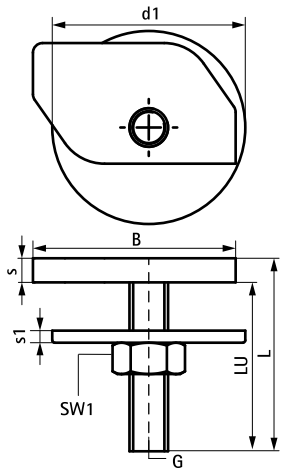

Complementary

137 BIS Fixing Rail - WM3
141 BIS Cantilever Arm - WM3 (BUP1000)

BIS Washer (Flat) (BUP1000)

(G 30 74)

fixing to BIS RapidRail®



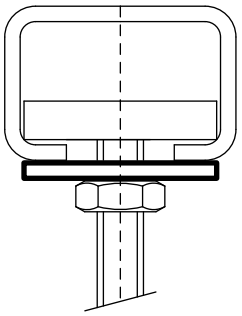

Features and Benefits

- suitable for rail WM0, 1, 15, 2, 30, 35
- material: steel
- surface protection:
  - product is part of the BIS UltraProtect® 1000 system
  - suitable for in- and outdoor applications
  - stands min. 1,000 hours salt spray test (max. 5% red rust) according to ISO 9227
- tested for fire safety

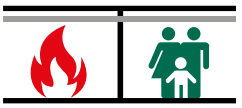

Part No.	B (mm)	s (mm)	d1 (mm)	For Rail	Pack 1	Pack 2
65381008	25	2.5	Ø 8.4	WM0 - 35	100	2,500
65381010	25	2.5	Ø 10.5	WM0 - 35	100	2,500
65381012	25	2.5	Ø 13.0	WM0 - 35	100	2,500
65381016	30	2.5	Ø 17.0	WM0 - 35	50	-
Tested for fire safety.						

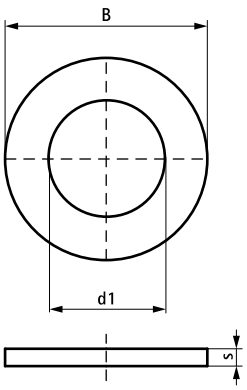

EN-SG 02/2022- Subject to modifications

BIS Washer (Flat)

(G 30 75)

fixing to BIS RapidRail®



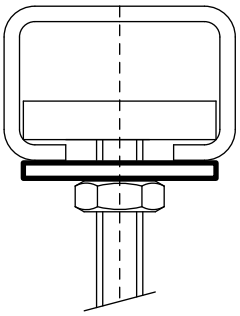

Features and Benefits

- suitable for rail WM0, 1, 15, 2, 30, 35
- material: steel
- zinc plated
- tested for fire safety

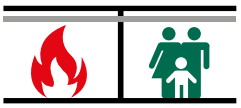

Part No.	B (mm)	s (mm)	d1 (mm)	For Rail	Pack 1	Pack 2
6533306	25	2.5	Ø 6.4	WM0 - 35	100	2,500
6533308	25	2.5	Ø 8.4	WM0 - 35	100	1,000
6533310	25	2.5	Ø 10.5	WM0 - 35	100	1,000
6533312	25	2.5	Ø 13.0	WM0 - 35	100	2,500
6533316	30	3.0	Ø 17.0	WM0 - 35	50	-

Tested for fire safety.
Part No. 6533306 not tested for fire safety.

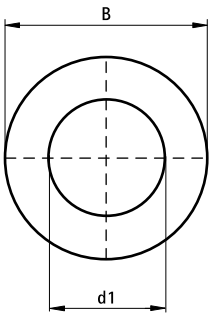

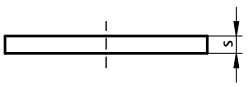

Complementary

133 RapidRail® Fixing Rail
140 BIS RapidRail® Cantilever Arm (BUP1000)

BIS Washer (Flat) - WM3

(G 30 80)

fixing to BIS WM3



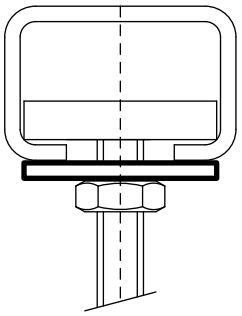

Features and Benefits

- material: steel
- zinc plated
- tested for fire safety

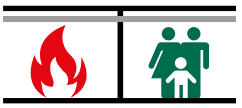

Part No.	B (mm)	s (mm)	d1 (mm)	For Rail	Pack 1	Pack 2
6533408	35	2.5	Ø 8.5	WM3	100	500
6533410	35	2.5	Ø 10.5	WM3	100	500
6533412	35	2.5	Ø 12.5	WM3	50	250

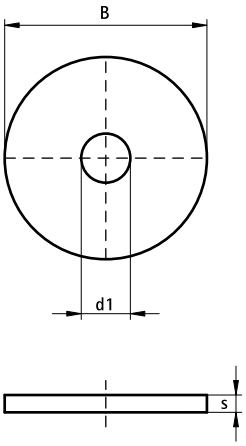

Complementary

137 BIS Fixing Rail - WM3
141 BIS Cantilever Arm - WM3 (BUP1000)

EN-SG 02/2022- Subject to modifications

BIS Washer (U-shaped)

(G 30 85)

fixing to BIS RapidRail®



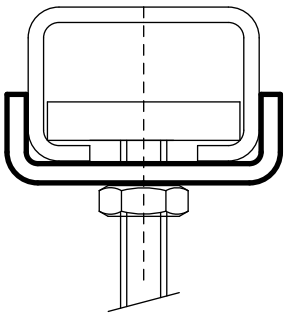

Features and Benefits

- U-shaped washer
- U-shaped for extra stability
- Part No. 65350XX: suitable for WM0
- Part No. 65351XX: suitable for WM1, 15, 2, 30, 35
- material: steel
- pre-galvanized

Part No.	L	B (mm)	H (mm)	d1 (mm)	For Rail	Pack 1	Pack 2
6535008	25 mm	28.0	10.5	Ø 9.0	WM0	50	250
6535010	25 mm	28.0	10.5	Ø 11.0	WM0	50	250
6535109	25 mm	30.5	9.0	Ø 9.0	WM1 - 35	50	250
6535110	25 mm	30.5	9.0	Ø 10.5	WM1 - 35	50	250
6535112	25 mm	30.5	9.0	Ø 12.5	WM1 - 35	50	250

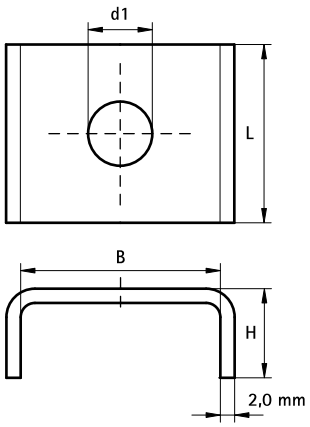

Complementary

133 RapidRail® Fixing Rail
140 BIS RapidRail® Cantilever Arm (BUP1000)

BIS Washer (U-shaped) - WM3

(G 30 90)

fixing to BIS WM3



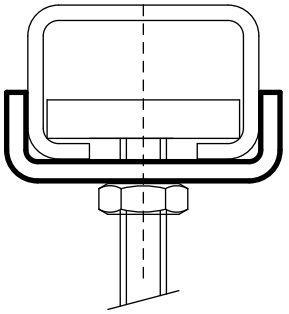

Features and Benefits

- U-shaped washer
- U-shaped for extra stability
- material: steel
- pre-galvanized

Part No.	L	B (mm)	H (mm)	For Rail	Pack 1
6535312	70 mm	51	19.0	WM3	50

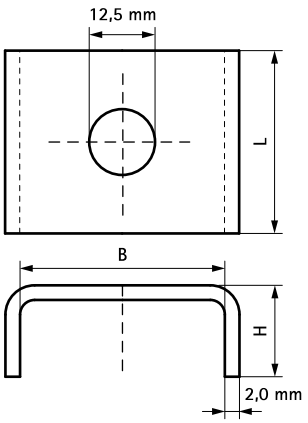

EN-SG 02/2022- Subject to modifications

BIS RapidRail® Basket Retainer Clip

(G 30 100)

for securing cable basket to BIS RapidRail®



Features and Benefits

- push fit for quick and easy installation
- suitable for all type of wire basket (Ø 4-5mm)
- suitable for BIS RapidRail®
- not designed as a load bearing support
- material: spring steel (type CS70)
- surface protection:
  - product is part of the BIS UltraProtect® 1000 system
  - suitable for in- and outdoor applications
  - stands min. 1,000 hours salt spray test (max. 5% red rust) according to ISO 9227

Part No.	Pack 1
6553945	100

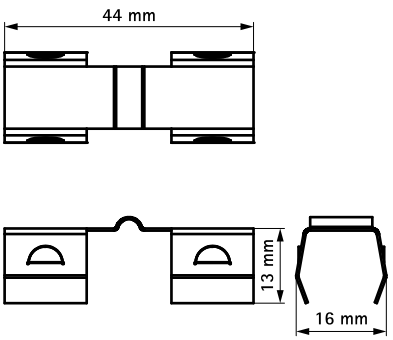

Complementary

133 RapidRail® Fixing Rail

EN-SG 02/2022- Subject to modifications

BIS RapidRail® Connector 90°

(G 35 05)

to make BIS RapidRail® fabrications





RAL-GZ 655/D
Cert.Nr. 2012-09

Features and Benefits

- connector with pre-assembled BIS RapidRail® Slide nut(s)
- to make rail fabrications
- suitable for rail WM0, 1, 15, 2, 30, 35
- ready-to-use pre-assembled for a quick fixing, and retains assembly in place before final tightening
- material: metal parts made of steel 1.0332; spring(s) made of POM (polyoxymethylene), green
- zinc plated

Part No.	Model	a (°)	$T_{(max.)}$ (Nm)	For Rail	$F_{a,z}$ (N)	$F_{a,x}$ (N)	RAL	Pack 1
6584001	Long / long	90°	15.0	WM0 - 35	1,562	720	RAL[1]	25
6584002	Short / long	90°	15.0	WM0 - 35	1,336	448	RAL[1]	25
6584003	Short / short	90°	15.0	WM0 - 35	1,336	448	RAL[1]	25
6584011	Long / long	90°	15.0	WM0 - 35	1,562	720	RAL[1]	25

RAL[1] = tested, certified and monitored by a third party according to RAL-GZ 655/D in combination with Rail WM1, 2, 15 and 30.
For detailed technical information about our RAL marked products, please see the RAL datasheet in our web catalogue.

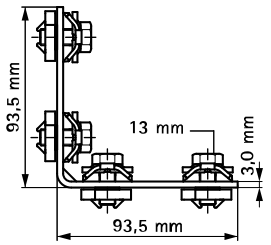

658 4 001

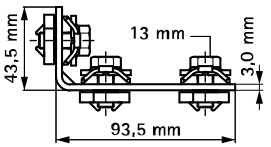

658 4 002

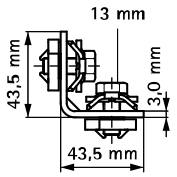

658 4 003

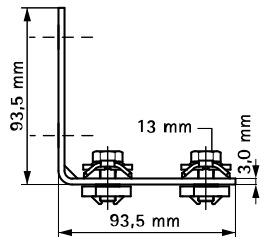

658 4 011

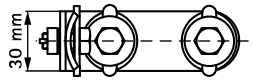

BIS RapidRail® Connector 135°

(G 35 10)

to make BIS RapidRail® fabrications





Features and Benefits

- connector with pre-assembled BIS RapidRail® Slide nut(s)
- to make rail fabrications
- suitable for rail WM0, 1, 15, 2, 30, 35
- with pre-assembled BIS RapidRail® Sliding nut(s) for a quick fixing, and retains assembly in place before final tightening
- material: metal parts made of steel 1.0332; spring(s) made of POM (polyoxymethylene), green
- zinc plated

Part No.	Model	a (°)	$T_{(max.)}$ (Nm)	For Rail	$F_{a,z}$ (N)	$F_{a,x}$ (N)	RAL	Pack 1
6584051	Long / long	135°	15.0	WM0 - 35	1,562	1,109	RAL[1]	25
6584052	Short / long	135°	15.0	WM0 - 35	1,336	448	RAL[1]	25
6584053	Short / short	135°	15.0	WM0 - 35	1,336	448	RAL[1]	25

RAL[1] = tested, certified and monitored by a third party according to RAL-GZ 655/D in combination with Rail WM1, 2, 15 and 30.
For detailed technical information about our RAL marked products, please see the RAL datasheet in our web catalogue.

RAL GÜTEZEICHEN
ROHRBEFESTIGUNG
RAL-GZ 655/D
Cert.Nr. 2012-09

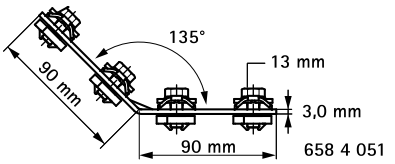

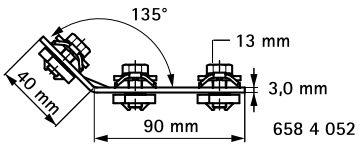

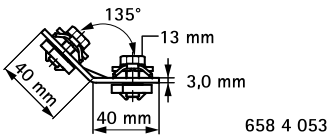

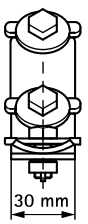

Complementary

133 RapidRail® Fixing Rail

BIS Rail Connector with Slide Nuts

(G 35 15)

to make BIS RapidRail® fabrications

A



B



Features and Benefits

- to make rail fabrications
- suitable for rail WM0, 1, 15, 2, 30, 35
- with pre-assembled double slide nut
- material: steel
- zinc plated

	Part No.	a (°)	$T_{(max.)}$ (Nm)	For Rail	Pack 1
A	6583109	90°	15.0	WM0 - 35	25
B	6583113	135°	15.0	WM0 - 35	25

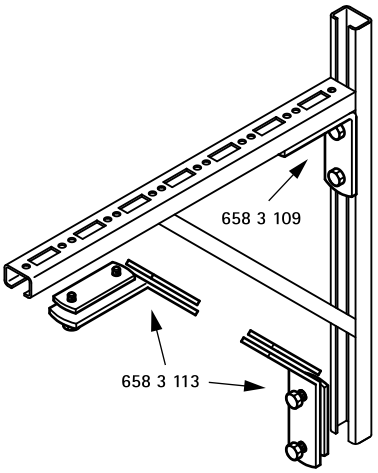

A

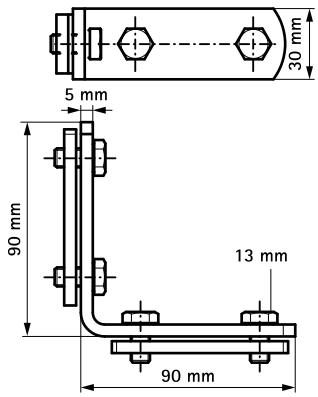

B

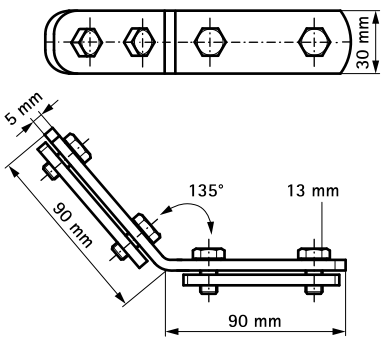

Complementary

133 RapidRail® Fixing Rail

Alternative

174 BIS RapidRail® Connector 90°

EN-SG 02/2022- Subject to modifications

BIS Rail Connector 90° with Slide Nut - WM3

(G 35 20)

to make BIS WM3 fabrications



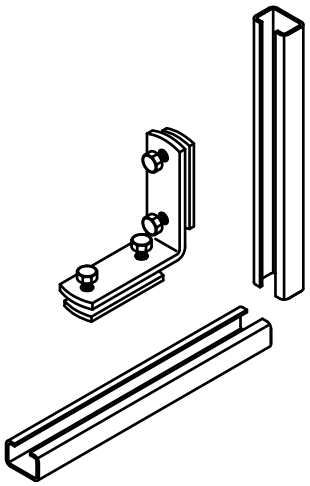

Features and Benefits

- to make rail fabrications
- with pre-assembled double slide nut
- material: steel
- zinc plated

Part No.	a (°)	For Rail	Pack 1
6583309	90°	WM3	20

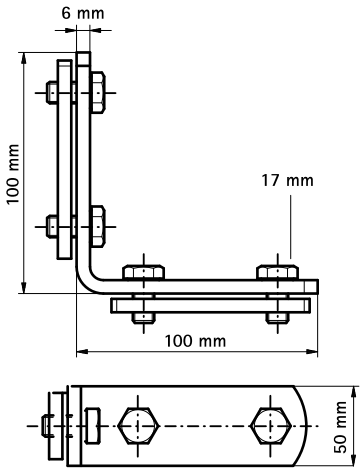

Complementary

137 BIS Fixing Rail - WM3

BIS Rail Connector

(G 35 25)

to make BIS RapidRail® fabrications

A



B



Features and Benefits

- to make rail fabrications
- suitable for rail WM0, 1, 15, 2, 30, 35
- material: steel
- zinc plated

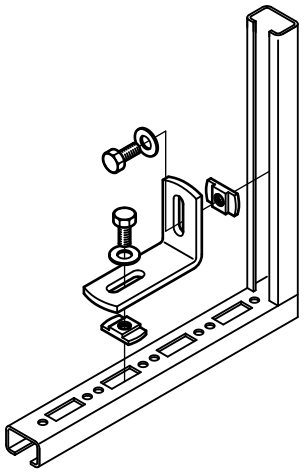

	Part No.	a (°)	$T_{(max.)}$ (Nm)	For Rail	Pack 1
A	6585090	90°	15.0	WM0 - 35	50
B	6585135	135°	15.0	WM0 - 35	50

A

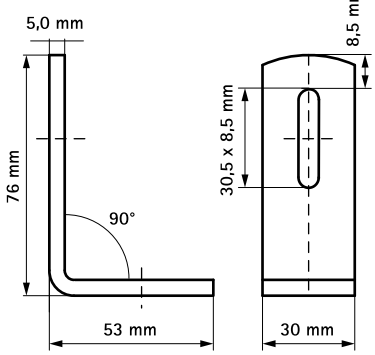

B

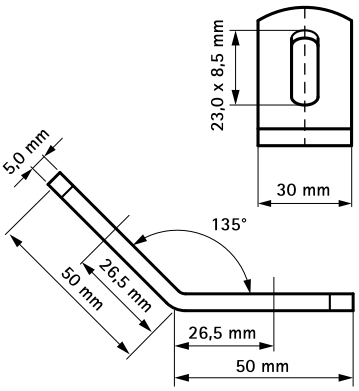

Complementary

133 RapidRail® Fixing Rail

Alternative

174 BIS RapidRail® Connector 90°

EN-SG 02/2022- Subject to modifications

BIS Rail Connector 90° - WM3

(G 35 30)

to make BIS WM3 fabrications



Features and Benefits

- to make rail fabrications
- material: steel
- surface protection:
  - product is part of the BIS UltraProtect® 1000 system
  - suitable for in- and outdoor applications
  - stands min. 1,000 hours salt spray test (max. 5% red rust) according to ISO 9227

Part No.	L	B (mm)	H (mm)	s (mm)	d1 (mm)	a (°)	For Rail	Pack 1
6591090	50 mm	94	74	6	23 x 13	90°	WM3	50

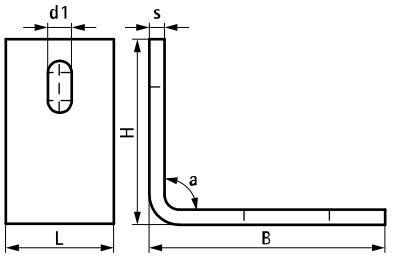

Complementary

137 BIS Fixing Rail - WM3

EN-SG 02/2022- Subject to modifications

BIS RapidRail® Connector

(G 35 35)

to make BIS RapidRail® fabrications





Features and Benefits

- connector with pre-assembled BIS RapidRail® Slide nut(s)
- to make rail fabrications
- suitable for rail WM0, 1, 15, 2, 30, 35
- ready-to-use pre-assembled for a quick fixing, and retains assembly in place before final tightening
- material: metal parts made of steel 1.0332; spring(s) made of POM (polyoxymethylene), green
- zinc plated

RAL GÜTEZEICHEN ROHRBEFESTIGUNG
RAL-GZ 655/D
Cert.Nr. 2012-08

Part No.	$T_{(max.)}$ (Nm)	For Rail	$F_{a,x}$ (N)	RAL	Pack 1
6543001	15.0	WM0, 1, 15, 2, 30, 35	1,547	RAL[1]	25

RAL[1] = tested, certified and monitored by a third party according to RAL-GZ 655/D in combination with Rail WM1, 2, 15 and 30.
For detailed technical information about our RAL marked products, please see the RAL datasheet in our web catalogue.

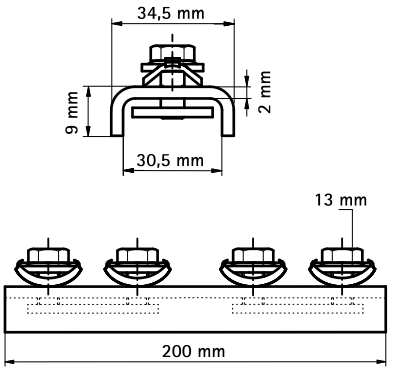

Complementary
133 RapidRail® Fixing Rail

EN-SG 02/2022- Subject to modifications

BIS Rail Connector - WM3

(G 35 40)

to make BIS WM3 fabrications



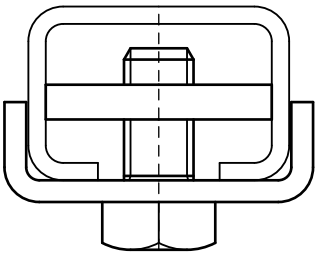

Features and Benefits

- to make rail fabrications
- with pre-assembled double slide nut
- material: steel
- zinc plated

Part No.	L	B (mm)	H (mm)	S (mm)	SW1 (mm)	For Rail	Pack 1
6543004	250 mm	40	12	50	17	WM3	20

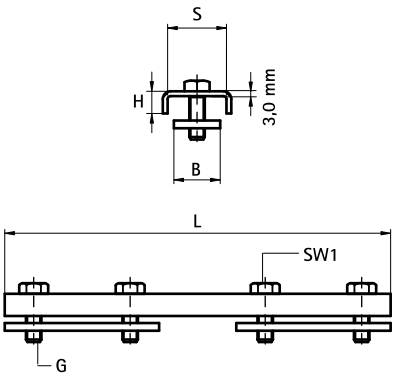

Complementary

137 BIS Fixing Rail - WM3

EN-SG 02/2022- Subject to modifications

BIS RapidRail® T- and X-Connector

(G 35 45)

to make BIS RapidRail® fabrications

A



B



Features and Benefits

- connector with pre-assembled BIS RapidRail® Slide nut(s)
- to make rail fabrications
- suitable for rail WM0, 1, 15, 2, 30, 35
- ready-to-use pre-assembled for a quick fixing, and retains assembly in place before final tightening
- material: metal parts made of steel 1.0332; spring(s) made of POM (polyoxymethylene), green
- zinc plated



658 4 090



658 4 091

	Part No.	Type	$T_{(max.)}$ (Nm)	For Rail	$F_{a,x}$ (N)	RAL	Pack 1
A	6584090	T	15.0	WM0 - 35	345	RAL[1]	25
B	6584091	X	15.0	WM0 - 35	345	RAL[1]	25

RAL[1] = tested, certified and monitored by a third party according to RAL-GZ 655/D in combination with Rail WM1, 2, 15 and 30.
For detailed technical information about our RAL marked products, please see the RAL datasheet in our web catalogue.

RAL GÜTEZEICHEN ROHRBEFESTIGUNG
RAL-GZ 655/D
Cert.Nr. 2012-08

A

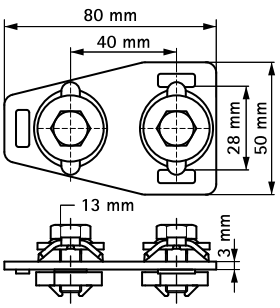

B

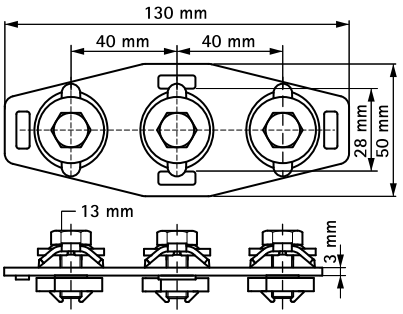

Complementary

133 RapidRail® Fixing Rail

EN-SG 02/2022- Subject to modifications

BIS RapidRail® Cross Connector

(G 35 50)

to make BIS RapidRail® fabrications





Features and Benefits

- connector with pre-assembled BIS RapidRail® Slide nut(s)
- to make rail fabrications
- ready-to-use pre-assembled for a quick fixing, and retains assembly in place before final tightening
- material: metal parts made of steel 1.0332; spring(s) made of POM (polyoxymethylene), green
- zinc plated

RAL-GZ 655/D
Cert.Nr. 2012-10

Part No.	L	B (mm)	H (mm)	s (mm)	S (mm)	k (mm)	$T_{(max.)}$ (Nm)	For Rail	$F_{a,z}$ (N)	$F_{a,x}$ (N)	RAL	Pack 1
6584150	104 mm	30	20	3.0	28	74	15.0	WM0	1,226	689	RAL[1]	25
6584151	112 mm	30	17	3.0	31	82	15.0	WM1	1,226	689	RAL[1]	25
6584152	109 mm	30	22	3.0	31	79	15.0	WM15	1,226	689	RAL[1]	25
6584153	97 mm	30	32	3.0	31	67	15.0	WM2	1,226	689	-	25
6584156	117 mm	30	42	3.0	39	87	15.0	WM35	1,226	689	-	25

RAL[1] = tested, certified and monitored by a third party according to RAL-GZ 655/D in combination with Rail WM1, 2, 15 and 30.
For detailed technical information about our RAL marked products, please see the RAL datasheet in our web catalogue.

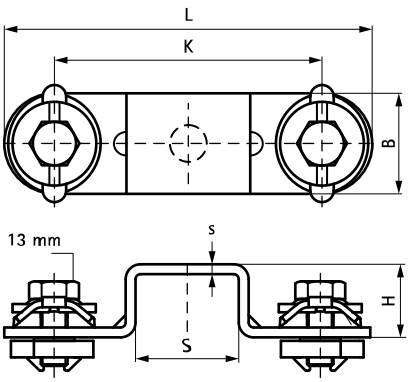

Complementary
133 RapidRail® Fixing Rail

BIS Rail Fixing Sets (Electrical)

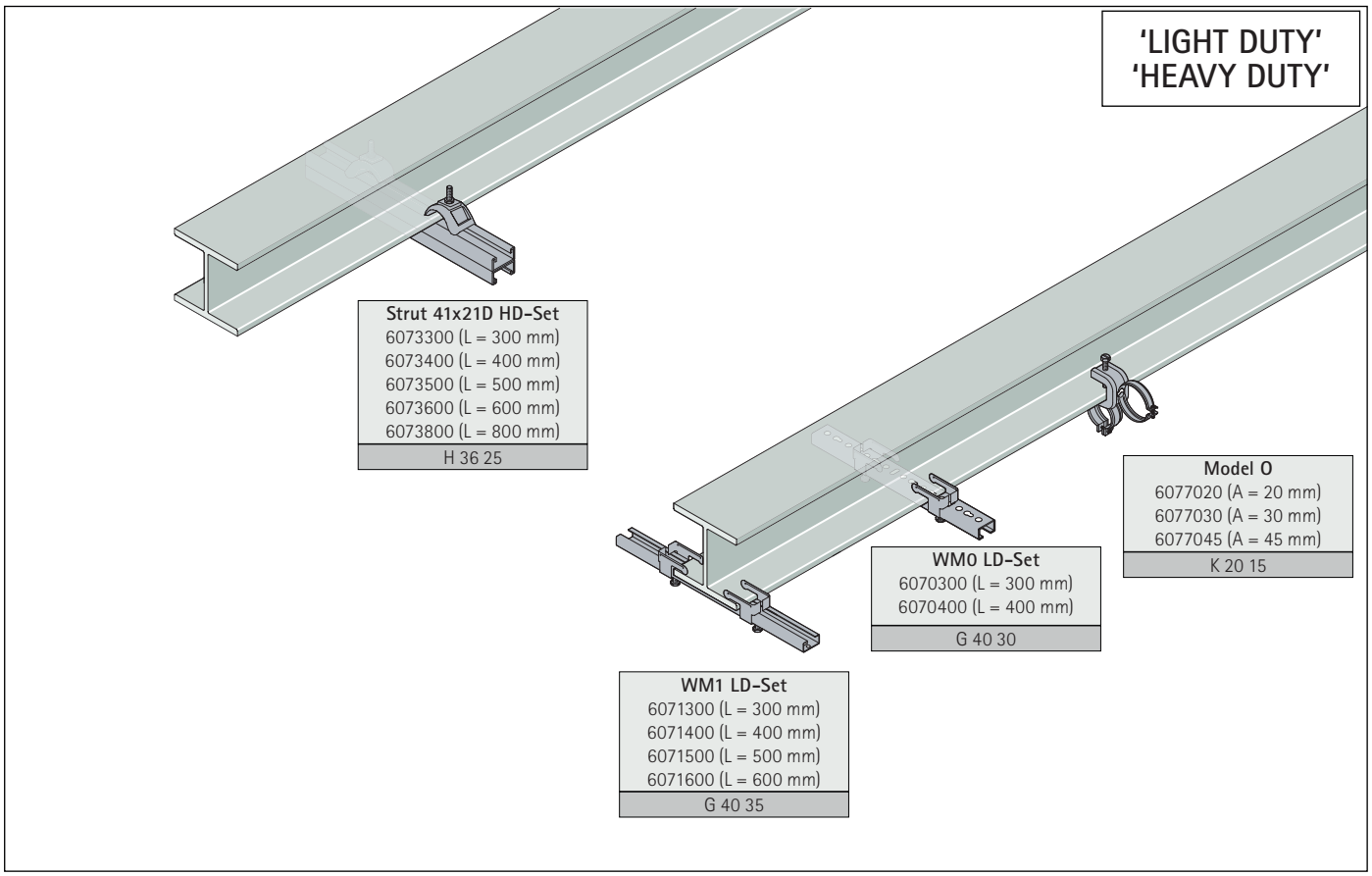

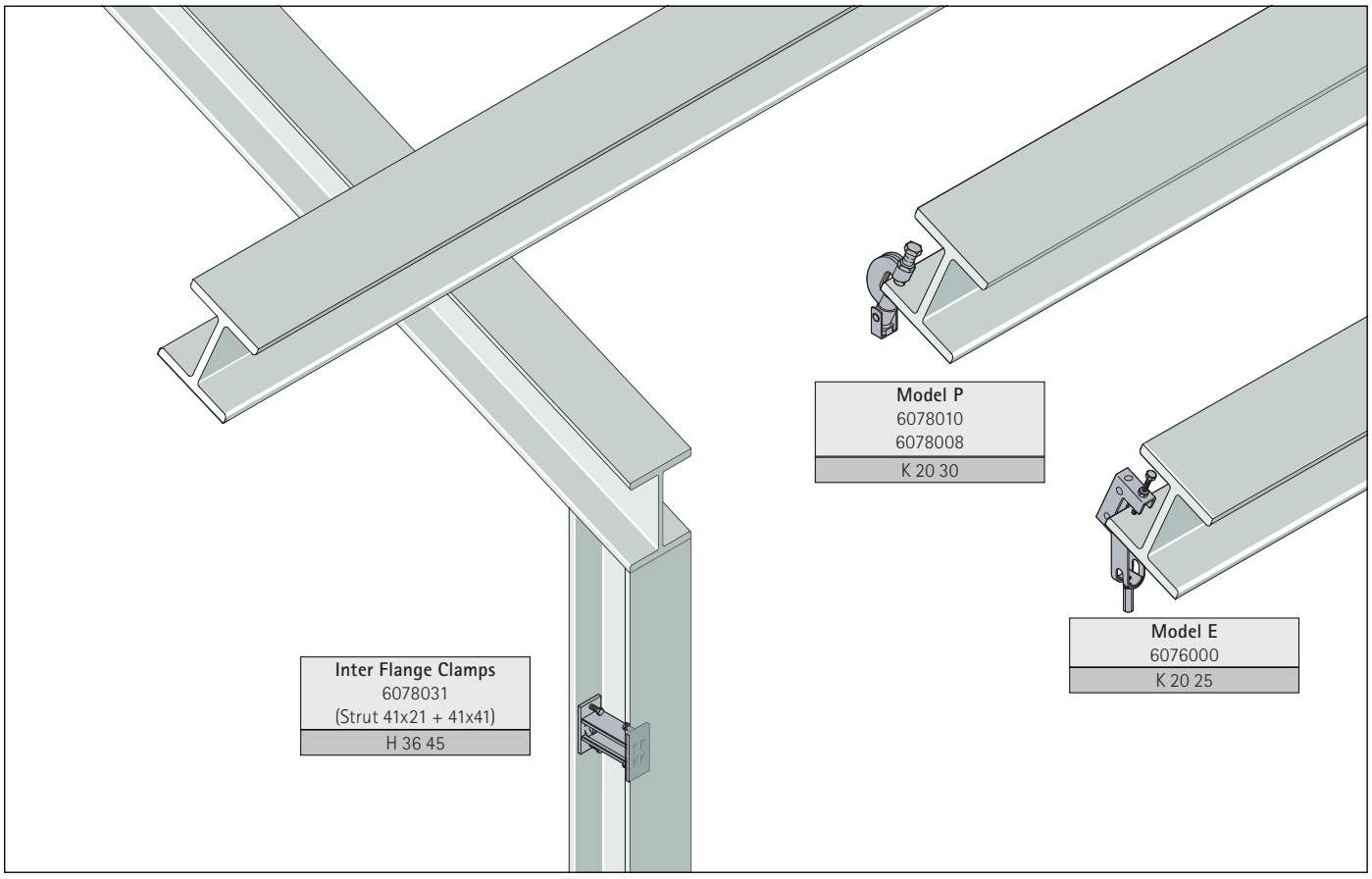

EN-SG 02/2022- Subject to modifications

BIS RapidRail® Beam Clamp

(G 40 05)

fixing to steel beam

A



B



Features and Benefits

- for a solid fixing to steel construction without the need for welding or drilling
- always use 2 beam clamps per fixing
- material: steel
- zinc plated

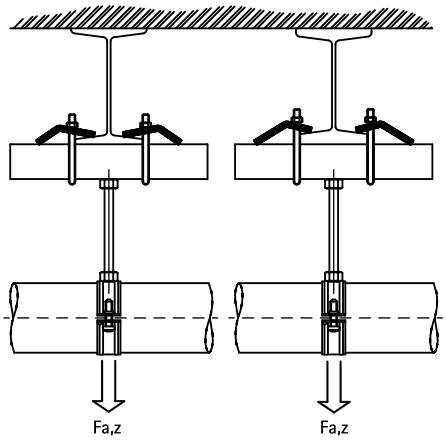

	Part No.	A (mm)	G	L	B (mm)	H (mm)	b (mm)	s (mm)	$T_{(max.)}$ (Nm)	For Rail	$F_{a,z}$ (N)	Pack 1
A	6585011	< 16	M6	45 mm	50	75	31	4.0	15.0	WM0 - 30	2,500	50
B	6585014	< 20	M8	60.9 mm	80	100	44	4.0	15.0	WM35	2,000	50

Note! Safe load ($F_{a,z}$) is only per set of beamclamps, per loading situation the max. allowed load of the rail must be calculated.

A

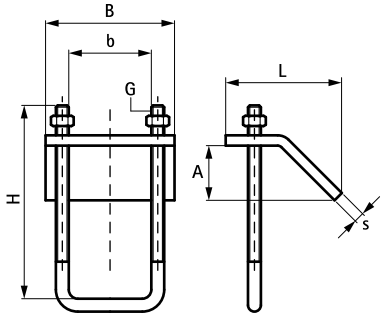

B

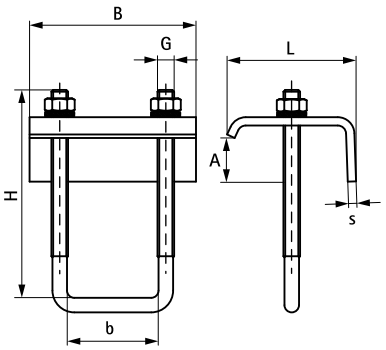

Complementary

133 RapidRail® Fixing Rail

BIS Rail Beam Clamp

(G 40 10)

fixing to steel beam



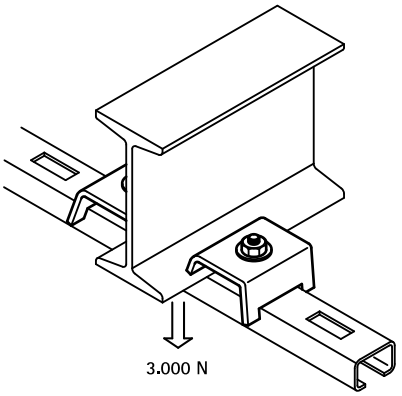

Features and Benefits

- beam clamp
- for a solid fixing to steel construction without the need for welding or drilling
- always use 2 beam clamps per fixing
- Part No. 6583060: suitable for WM1, 15, 2
- Part No. 6583090: suitable for WM1, 15, 2, 30
- material: steel
- zinc plated

Part No.	A (mm)	L	For Rail	$F_{a,z}$ (N)	Pack 1
6583060	< 11	60 mm	WM1, 15, 2	3,000	50
6583090	< 11	90 mm	WM1 - 30	3,000	50

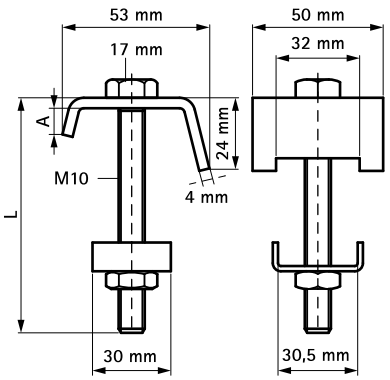

Alternative

185 BIS RapidRail® Beam Clamp

EN-SG 02/2022- Subject to modifications

BIS Rail Beam Clamp - WM3

(G 40 15)

fixing to steel beam



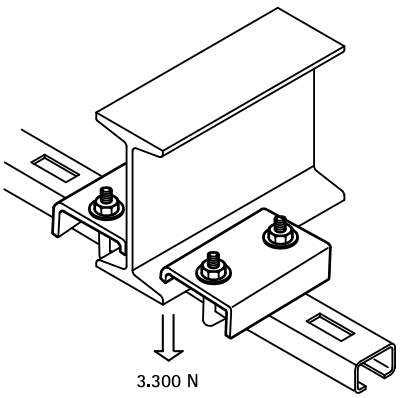

Features and Benefits

- for a solid fixing to steel construction without the need for welding or drilling
- always use 2 beam clamps per fixing
- material: steel
- zinc plated

Part No.	A (mm)	L	B (mm)	For Rail	$F_{a,z}$ (N)	Pack 1
6585003	< 20	118 mm	50	WM3	3,300	50

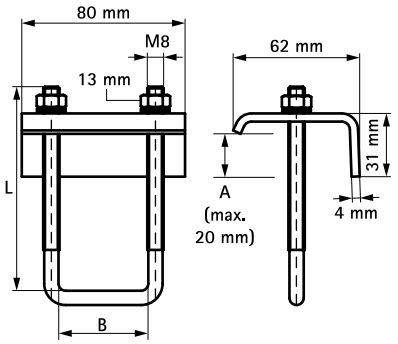

Complementary

137 BIS Fixing Rail - WM3

BIS 'Light Duty' Beam Clamp

(G 40 20)

fixing to steel beam



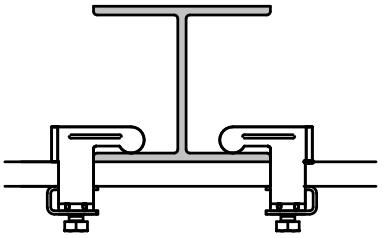

Features and Benefits

- for suspension of light components like cable trays, duct work, etc. onto beams without welding or drilling
- for fixing of rail to a steel beam
- material: steel
- zinc plated

Part No.	A (mm)	$T_{(max.)}$ (Nm)	For Rail	Pack 1
6070000	< 12	15.0	WM0	50
6071000	< 20	15.0	WM1	50

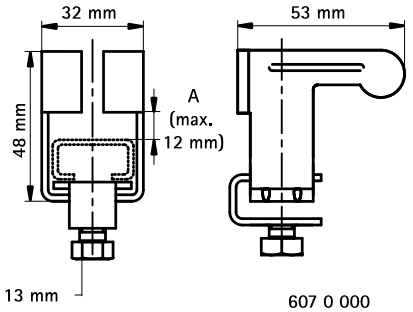

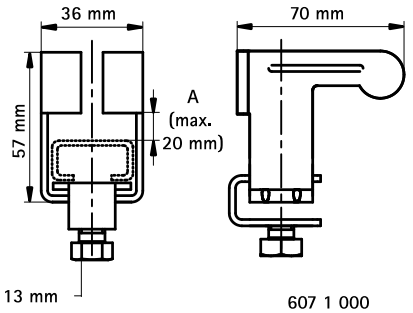

EN-SG 02/2022- Subject to modifications

BIS Rail WM0 'Light Duty' Set

(G 40 30)

fixing to steel beam up to flange 12 mm



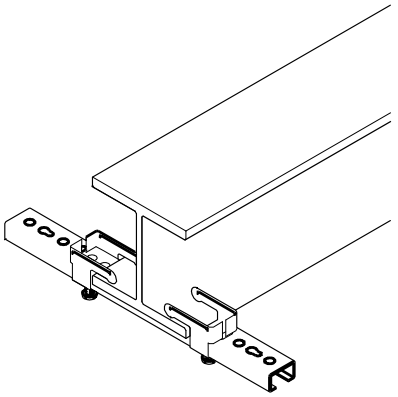

Features and Benefits

- for suspension of light components like cable trays, duct work, etc. onto beams without welding or drilling
- up to flange thickness 12 mm
- material: beam clamp made of steel; rail made of steel 1.0242
- beam clamp: zinc plated; rail: pre-galvanized
- consists of:
  - 1 length of rail WM0 (27x18 mm)
  - 2 Beam clamps WM0 (Part No. 607 0 000)
  - 2 Rail End Caps
- beam clamp also available loose

CSTB
le futur en construction
Rapport de test n°EEM11 26035356

Part No.	A (mm)	L	$T_{(max.)}$ (Nm)	From Rail	CSTB	Pack 1
6070300	< 12	300 mm	15.0	WM0	CSTB	20
6070400	< 12	400 mm	15.0	WM0	CSTB	20

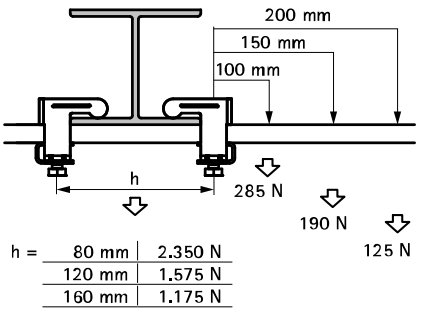

h =		
	80 mm	2.350 N
	120 mm	1.575 N
	160 mm	1.175 N

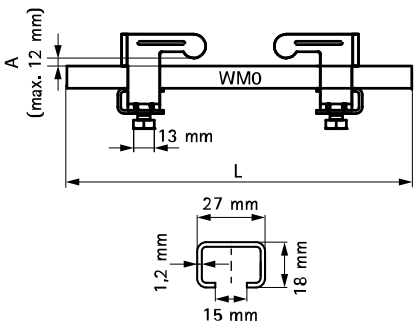

BIS Rail WM1 'Light Duty' Set

(G 40 35)

fixing to steel beam up to flange 20 mm



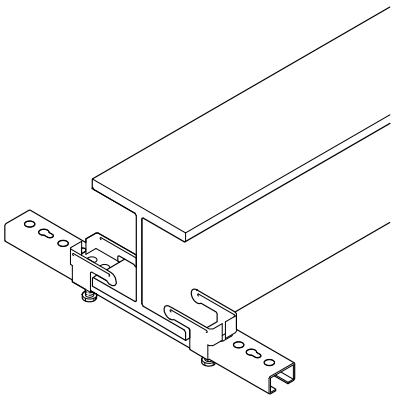

Features and Benefits

- for suspension of light components like cable trays, duct work, etc. onto beams without welding or drilling
- up to flange thickness 20 mm
- material: beam clamp made of steel; rail made of steel 1.0242
- beam clamp also available loose
- beam clamp: zinc plated; rail: pre-galvanized
- consists of:
  - 1 length of rail WM1 (30x15 mm)
  - 2 Beam clamps WM1 (Part No. 607 1 000)
  - 2 Rail End Caps

CSTB
le futur en construction
Rapport de test n°EEM11 26035356

Part No.	A (mm)	L	$T_{(max.)}$ (Nm)	From Rail	CSTB	Pack 1
6071300	< 20	300 mm	15.0	WM1	CSTB	20
6071400	< 20	400 mm	15.0	WM1	CSTB	20
6071500	< 20	500 mm	15.0	WM1	CSTB	15
6071600	< 20	600 mm	15.0	WM1	CSTB	15

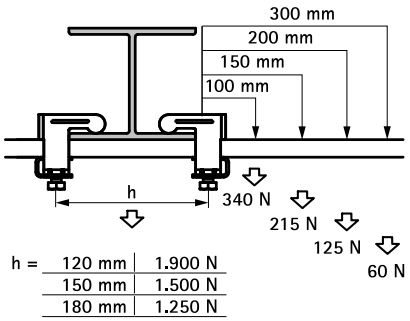

h =		
	120 mm	1.900 N
	150 mm	1.500 N
	180 mm	1.250 N

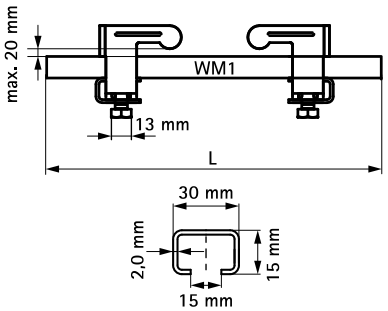

EN-SG 02/2022- Subject to modifications

BIS Rail End Cap

(G 45 05)

finishing of BIS RapidRail®

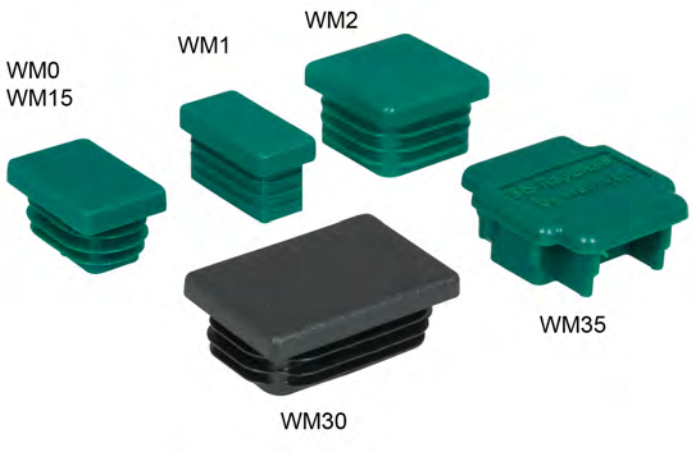

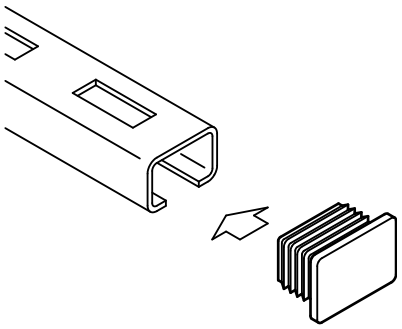

Features and Benefits

- for clean finishing of rail end, covers all burrs
- material: PE (polyethylene)
- easy to fix securely

Part No.	For Rail	Colour	Pack 1	Pack 2
6566000	WM0 (27x18 mm), WM15 (30x20 mm)	Green	50	250
6566001	WM1 (30x15 mm)	Green	50	250
6566002	WM2 (30x30 mm)	Green	25	250
6566030	WM30 (30x45 mm)	Black	20	200
6566035	WM35 (38x40 mm)	Green	20	200

Complementary

133 RapidRail® Fixing Rail
140 BIS RapidRail® Cantilever Arm (BUP1000)

EN-SG 02/2022- Subject to modifications

BIS Rubber Strip

(G 45 10)

noise insulation lining for rail



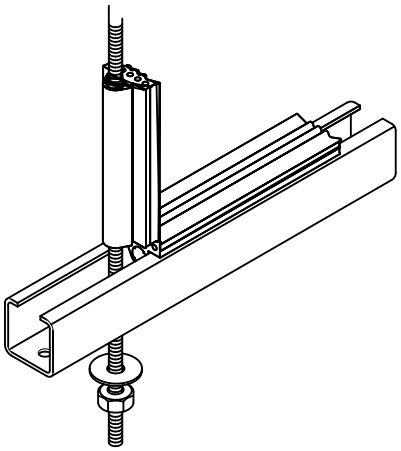

Features and Benefits

- noise insulating lining for rail
- also usable for threaded rod M6, M8 or M10
- suitable for rail WM0, 1, 15, 2, 30, 35
- material: EPDM rubber, black
- building material class B2 according to DIN 4102-1 and class E according to EN 13501-1
- sound insulating lining according DIN 4109

Part No.	R	L	For Rail	Pack 1	App.
6568001	M6 - M10	30 m	WM0 - 35	30	m.

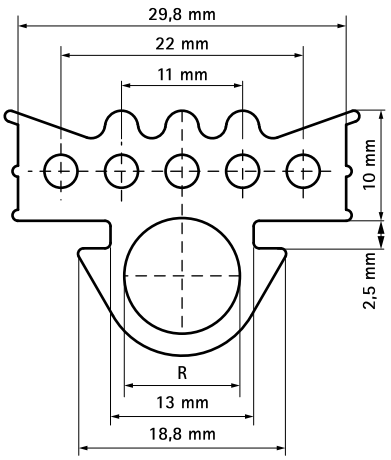

Complementary

133 RapidRail® Fixing Rail
140 BIS RapidRail® Cantilever Arm (BUP1000)

EN-SG 02/2022- Subject to modifications

BIS Rail End Cap – WM3

(G 45 20)

finishing of BIS WM3 Rail



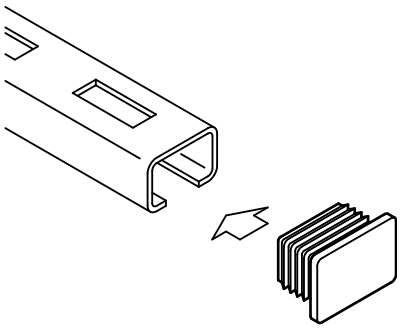

Features and Benefits

- for clean finishing of rail end, covers all burrs
- material: PE (polyethylene)
- easy to fix securely

Part No.	For Rail	Pack 1	Pack 2
6566003	WM3 (50x40 mm)	15	150

Complementary

137 BIS Fixing Rail - WM3

Calculation method

The published safe working loads are calculated with perforated (slotted) rail.

Loads are calculated taking into consideration a maximum deflection (f) of L/200 (according to RAL-GZ 655/B) and a maximum bending stress of 160 N/mm^2 (see picture 1).

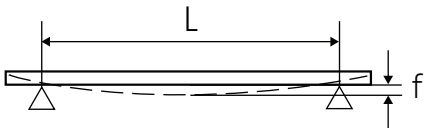

Picture 1

1 N (Newton) = 0,102 kg
1 kg = 9,8 N (Newton)

Fixing of rails to walls or ceilings
The strength of the anchoring of the rail has not been taken into consideration. The installer must verify that the bolts and wall plugs used are suitable for the maximum permitted loading of the rail.

Reading the rail loading tables
The stated values are only valid for the fixing rail. The maximum safe load of all other construction parts have to be verified. The stated maximum safe load is calculated for a static load at free bending support (see picture 2).

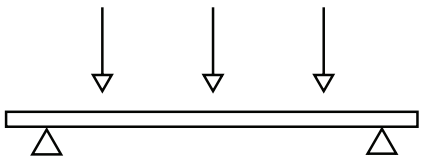

Picture 2

Where the segment is marked with a hyphen, the stated length cannot be safely loaded.

Special conditions
In case of doubt or for special conditions not stated in the loading tables, please do not hesitate to contact our technical department for their advice.

Hanging of rails from the ceiling
When hanging rails from the ceiling we recommend the use of U-formed washers on the open side of the rail (see picture 3).

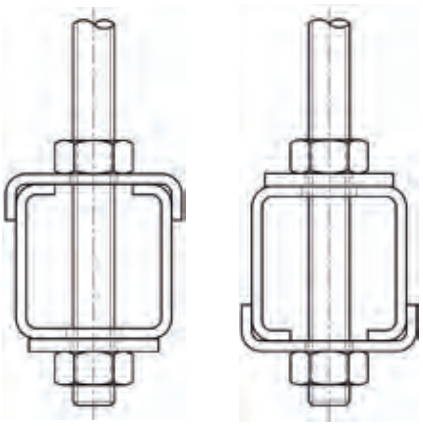

Picture 3

Methods of loading
Where loads are suspended beneath rails (e.g. hanging pipes), the load must not exceed the relevant safe load of the slide nut. To increase rigidity of the installation we recommend the use of a U-formed washer (see picture 4).

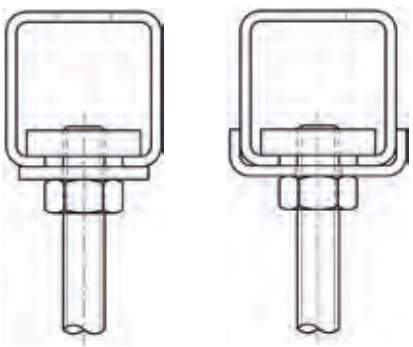

Picture 4

BIS RapidRail® Fixing rail: suspension on 1 point

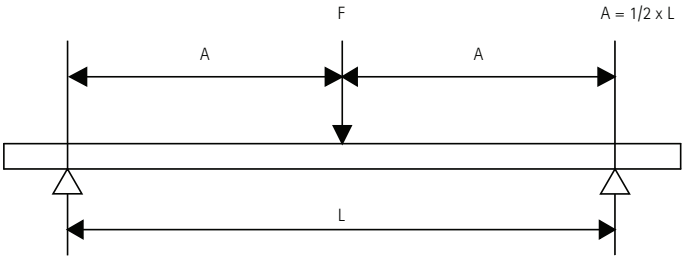



L (mm)	WM0 (27 x 18)	WM1 (30 x 15)	WM15 (30 x 20)	WM2 (30 x 30)	WM30 (30 x 45)	WM35 (38 x 40)
250	758	899	1,249	3,238	5,199	4,821
300	631	749	1,041	2,698	4,333	4,018
350	541	642	892	2,313	3,714	3,444
400	474	562	781	2,023	3,250	3,013
450	421	499	694	1,799	2,889	2,679
500	379	449	625	1,619	2,600	2,411
600	316	358	521	1,349	2,166	2,009
700	266	263	446	1,156	1,857	1,722
800	204	202	348	1,012	1,625	1,507
900	161	159	275	899	1,444	1,339
1,000	130	129	223	780	1,300	1,205
1,200	91	90	155	542	1,083	1,004
1,400	67	66	114	398	928	841
1,600	51	50	87	305	812	644
1,800	40	40	69	241	643	509
2,000	33	32	56	195	521	412
2,250	26	25	44	154	412	326
2,500	21	21	36	125	333	264
2,750	17	17	29	103	275	218
3,000	14	14	25	87	231	183
3,250	12	12	21	74	197	156
3,500	11	11	18	64	170	135
3,750	-	-	16	55	148	117
4,000	-	-	14	49	130	103
4,250	-	-	12	43	115	91
4,500	-	-	11	39	103	81
4,750	-	-	-	35	92	73
5,000	-	-	-	31	83	66
5,250	-	-	-	28	76	60
5,500	-	-	-	26	69	55
5,750	-	-	-	24	63	50
6,000	-	-	-	22	58	46

Max. allowed load in N.

The stated values are only valid for the fixing rail.
The maximum safe load of all other construction parts have to be verified.

BIS RapidRail® Fixing rail: 2 equal loads

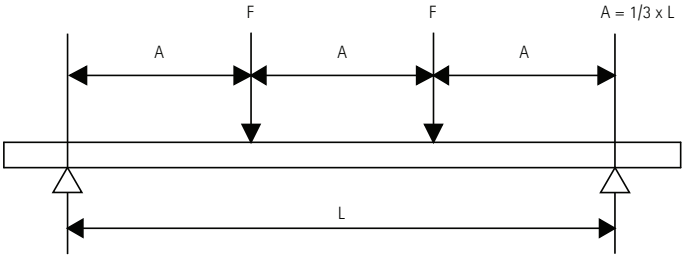



L (mm)	WM0 (27 x 18)	WM1 (30 x 15)	WM15 (30 x 20)	WM2 (30 x 30)	WM30 (30 x 45)	WM35 (38 x 40)
250	568	674	937	2,428	3,900	3,616
300	474	562	781	2,023	3,250	3,013
350	406	481	669	1,734	2,785	2,583
400	355	421	586	1,518	2,437	2,260
450	316	374	521	1,349	2,166	2,009
500	284	303	468	1,214	1,950	1,808
600	213	210	363	1,012	1,625	1,507
700	156	155	267	867	1,393	1,291
800	120	118	204	715	1,219	1,130
900	95	94	161	565	1,083	1,004
1,000	77	76	131	458	975	904
1,200	53	53	91	318	812	672
1,400	39	39	67	234	624	494
1,600	30	30	51	179	478	378
1,800	24	23	40	141	377	299
2,000	19	19	33	114	306	242
2,250	15	15	26	90	242	191
2,500	12	12	21	73	196	155
2,750	10	10	17	61	162	128
3,000	-	-	15	51	136	108
3,250	-	-	12	43	116	92
3,500	-	-	11	37	100	79
3,750	-	-	-	33	87	69
4,000	-	-	-	29	76	60
4,250	-	-	-	25	68	54
4,500	-	-	-	23	60	48
4,750	-	-	-	20	54	43
5,000	-	-	-	18	49	39
5,250	-	-	-	17	44	35
5,500	-	-	-	15	40	32
5,750	-	-	-	14	37	29
6,000	-	-	-	13	34	27

Max. allowed load in N. per suspension point (F).

The stated values are only valid for the fixing rail.
The maximum safe load of all other construction parts have to be verified.

BIS RapidRail® Fixing rail: 3 equal loads

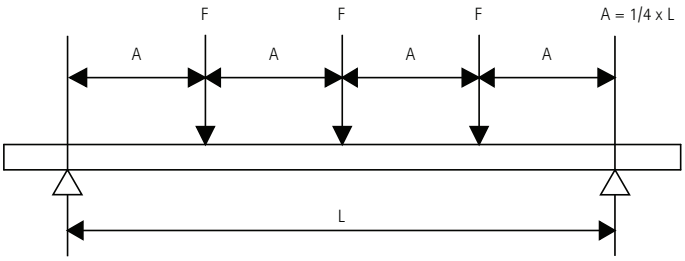



L (mm)	WM0 (27 x 18)	WM1 (30 x 15)	WM15 (30 x 20)	WM2 (30 x 30)	WM30 (30 x 45)	WM35 (38 x 40)
250	379	449	625	1,619	2,600	2,411
300	316	374	521	1,349	2,166	2,009
350	271	321	446	1,156	1,857	1,722
400	237	281	390	1,012	1,625	1,507
450	210	250	347	899	1,444	1,339
500	189	217	312	809	1,300	1,205
600	153	151	260	674	1,083	1,004
700	112	111	191	578	928	861
800	86	85	147	506	812	753
900	68	67	116	406	722	670
1,000	55	54	94	328	650	603
1,200	38	38	65	228	542	482
1,400	28	28	48	168	448	354
1,600	21	21	37	128	343	271
1,800	17	17	29	101	271	214
2,000	14	14	23	82	219	174
2,250	11	11	19	65	173	137
2,500	-	-	15	53	140	111
2,750	-	-	12	43	116	92
3,000	-	-	10	36	97	77
3,250	-	-	-	31	83	66
3,500	-	-	-	27	72	57
3,750	-	-	-	23	62	49
4,000	-	-	-	21	55	43
4,250	-	-	-	18	49	38
4,500	-	-	-	16	43	34
4,750	-	-	-	15	39	31
5,000	-	-	-	13	35	28
5,250	-	-	-	12	32	25
5,500	-	-	-	11	29	23
5,750	-	-	-	-	27	21
6,000	-	-	-	-	24	19

Max. allowed load in N. per suspension point (F).

The stated values are only valid for the fixing rail.
The maximum safe load of all other construction parts have to be verified.

BIS RapidRail® Fixing rail: Uniformly distributed load

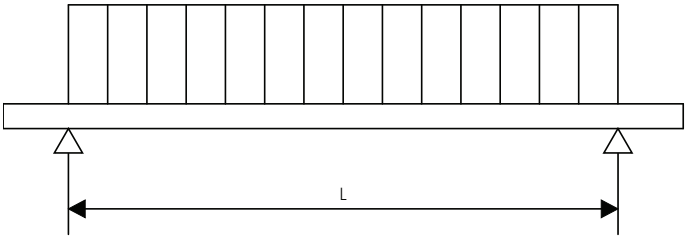



L (mm)	WM0 (27 x 18)	WM1 (30 x 15)	WM15 (30 x 20)	WM2 (30 x 30)	WM30 (30 x 45)	WM35 (38 x 40)
250	1,516	1,797	2,499	6,475	10,399	9,643
300	1,263	1,498	2,082	5,396	8,666	8,036
350	1,083	1,284	1,785	4,625	7,428	6,888
400	947	1,123	1,562	4,047	6,499	6,027
450	842	998	1,388	3,597	5,777	5,357
500	758	826	1,249	3,238	5,199	4,821
600	580	574	990	2,698	4,333	4,018
700	426	421	727	2,313	3,714	3,444
800	326	323	557	1,950	3,250	3,013
900	258	255	440	1,541	2,889	2,679
1,000	209	206	356	1,248	2,600	2,411
1,200	145	143	248	867	2,166	1,832
1,400	106	105	182	637	1,701	1,346
1,600	82	81	139	488	1,302	1,031
1,800	64	64	110	385	1,029	814
2,000	52	52	89	312	833	660
2,250	41	41	70	247	658	521
2,500	33	33	57	200	533	422
2,750	28	27	47	165	441	349
3,000	23	23	40	139	370	293
3,250	20	20	34	118	316	250
3,500	17	17	29	102	272	215
3,750	15	15	25	89	237	188
4,000	13	13	22	78	208	165
4,250	12	11	20	69	185	146
4,500	10	10	18	62	165	130
4,750	-	-	16	55	148	117
5,000	-	-	14	50	133	106
5,250	-	-	13	45	121	96
5,500	-	-	12	41	110	87
5,750	-	-	11	38	101	80
6,000	-	-	-	35	93	73

Max. allowed load in N.

The stated values are only valid for the fixing rail.
The maximum safe load of all other construction parts have to be verified.

BIS RapidRail® Cantilever arms: Suspension on 1 point

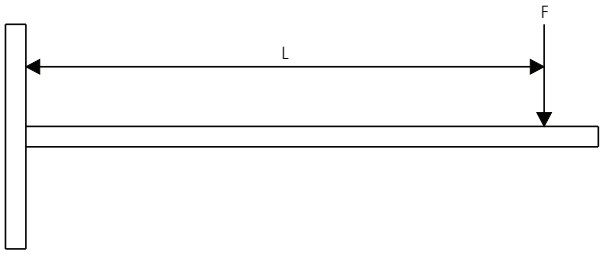

L (mm)	WM0 (27 x 18)	WM1 (30 x 15)	WM15 (30 x 20)	WM2 (30 x 30)	WM35 (38 x 40)
150	316	358	521	1,349	2,009
200	204	202	348	1,012	1,507
250	130	129	223	780	1,205
300	91	90	155	542	1,004
350	67	66	114	398	841
400	51	50	87	305	644
500	33	32	56	195	412
600	23	22	39	135	286
700	17	16	28	100	210
800	13	13	22	76	161
900	10	-	17	60	127
1,000	-	-	14	49	103

Max. allowed load in N.

The stated values are only valid for the fixing rail.
The maximum safe load of all other construction parts have to be verified.

BIS RapidRail® Cantilever arms: Uniformly distributed load

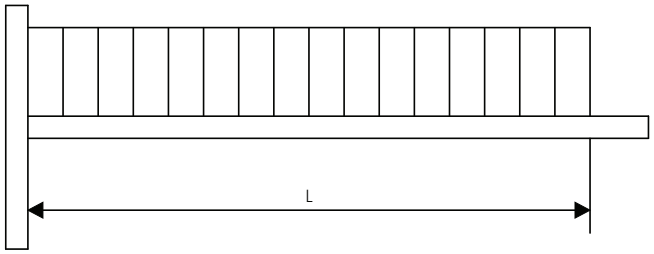

L (mm)	WM0 (27 x 18)	WM1 (30 x 15)	WM15 (30 x 20)	WM2 (30 x 30)	WM35 (38 x 40)
150	631	749	1,041	2,698	4,018
200	474	538	781	2,023	3,013
250	348	344	594	1,619	2,411
300	242	239	413	1,349	2,009
350	177	176	303	1,061	1,722
400	136	134	232	813	1,507
500	87	86	149	520	1,099
600	60	60	103	361	763
700	44	44	76	265	561
800	34	34	58	203	429
900	27	27	46	161	339
1,000	22	22	37	130	275

Max. allowed load in N.

The stated values are only valid for the fixing rail.
The maximum safe load of all other construction parts have to be verified.

H BIS RapidStrut® Fixing System



BIS Fixing Rail

BIS RapidStrut® Fixing Rail DS 5 (BUP1000) 205
BIS RapidStrut® Fixing Rail (pg) 206
BIS RapidStrut® Fixing Rail (BUP1000) 207
BIS RapidStrut® Fixing Rail with Anchor Holes (pg) 208
BIS RapidStrut® Fixing Rail Double (pg) 209
BIS RapidStrut® Fixing Rail Double (hdg) 210



BIS Cantilever Arms

BIS RapidStrut® Cantilever Arm (BUP1000) 211
BIS RapidStrut® Cantilever Arm Vertical (BUP1000) 212
BIS RapidStrut® Cantilever Arm 41x41D (BUP1000) 213
BIS RapidStrut® Cantilever Arm with Rail Prop 214
Cantilever Arm for WMO Strut 215



BIS Wall Plates

BIS RapidStrut® Base Plate G2 (BUP1000) 216
BIS Strut Base Plate G2 (zp) 217
BIS Strut T-shape Base Plate (BUP1000) 218
BIS Strut Base Plate Heavy Duty (BUP1000) 219
BIS Strut Wall Plate (Hinged) (BUP1000) 220
BIS Adjustable Support Bracket 221
BIS Strut T-Bracket 222
BIS Adjustable Support (BUP1000) 223



BIS Rail Props and Brackets

BIS Rail Prop (BUP1000) 224
BIS Flexible Rail Prop 225
BIS RapidStrut Construction Bracket (BUP1000) 226
BIS RapidStrut Corner Bracket (BUP1000) 227
BIS Strut Floor Bracket 228



BIS Console Kits

BIS Console Kit Clim ISO - Strut (Wall Rail) 229
BIS Console Kit Clim ISO - Strut 230



BIS Rail Accessories for Pipe Fixing

BIS RapidStrut® Slide Nut G2 (BUP1000) 231
BIS RapidStrut® Slide Nut MS (BUP1000) 232
BIS RapidStrut® Slide Nut MS (ZP) 233
BIS RapidStrut® Slide Nut with Adapter MS (ZP) 234
BIS Strut Slide Nut (BUP1000) 235
BIS Strut Slide Nut (zp) 236
BIS Strut Slide Nut (hdg) 237
BIS Strut Square Slide Nut (BUP1000) 238
BIS Strut Square Slide Nut 239
BIS RapidStrut® Slide Nut with Plastic Tabs (BUP1000) 240
BIS RapidStrut® Slide Nut with Plastic Tabs (zp) 241
BIS RapidStrut® Hammerfix G2 (BUP1000) 242
BIS RapidStrut® Hammerfix 'U' G2 (BUP1000) 243
BIS Strut Tee-Bolt 'U' (BUP1000) 244
BIS Strut Tee-Bolt Assembly 245
BIS RapidStrut® Ball Swivel Hanger 246
BIS Strut Washer - Flat (BUP1000) 247
BIS Strut Washer - Flat (zp) 248
BIS Strut Washer - U-shaped (BUP1000) 249

H BIS RapidStrut® Fixing System



BIS Rail Connectors

BIS RapidStrut® Rail Connector 90° G2 (BUP1000) **250**
BIS Strut Connector 90° (BUP1000) **251**
BIS Strut Connector 90° / 2D (BUP1000) **252**
BIS Strut Connector 90° Rigid (BUP1000) **253**
BIS Strut Connector, Hinged (BUP1000) **254**
BIS RapidStrut® Rail Connector 135° G2 (BUP1000) **255**
BIS Strut Angle Connector 135° (BUP1000) **256**
BIS Strut Angle Connector 45° (BUP1000) **257**
BIS RapidStrut® Rail Connector G2 (BUP1000) **258**
BIS Rectangular Connector **259**
BIS RapidStrut® Rail Connector - U-shaped G2 (BUP1000) **260**
BIS Strut U-Connector linear (BUP1000) **261**
BIS RapidStrut® Rail T- and X-Connector G2 (BUP1000) **262**
BIS Strut T-Connector (BUP1000) **263**
BIS Strut Z-Bracket (BUP1000) **264**
BIS RapidStrut® Cross Connector G2 (BUP1000) **265**
BIS Strut Cross Connector (BUP1000) **266**



BIS PushStrut Button System

BIS PushStrut Button **267**
BIS PushStrut Washer **268**
BIS PushStrut Connector Flat **269**
BIS PushStrut Construction Bracket Q (zp) **270**
BIS PushStrut Connector 90° **271**
BIS PushStrut T-Connector **272**
BIS PushStrut Wallplate **273**
BIS PushStrut 3D Connector **274**



BIS Strut Clamps

W1000 Strut Clamp **275**
W2000 Cushion Clamp **276**
W5000 Cushion Clamp **277**
BIS Strut Clamp with Lining **279**
BIS Strut Clamp **280**



BIS Beam Clamps and Rail Fixing Sets

BIS Strut Rail Beam Clamp **281**
BIS Strut Rail Beam Clamp **282**
BIS Strut Rail Beam Clamp **283**
BIS Strut Beam Clamp **284**
BIS Strut 41x21D 'Heavy Duty' Set **285**
BIS Strut 'Heavy Duty' Beam Clamp **286**
BIS Strut Inter Flange Clamp **287**

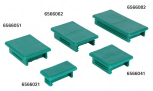

BIS Rail Finish Material

BIS Strut Rail End Cap **288**
BIS Strut PVC Profile (BUP1000) **289**
BIS Strut Rubber Strip **290**

EN-SG 02/2022- Subject to modifications

BIS RapidStrut®

For all medium rail applications



Fast and easy

The accessories are pre-assembled and delivered 'ready to use' on site.
The plastic spring allows the slide nut to be fixed easily into the rail, retaining the assembly in place before final tightening.



Extensive system

The BIS RapidStrut® fixing system offers an extensive choice for rail profiles and cantilever arms. A broad range of accessories are also available including: slide nuts, T-bolt assemblies and swivel hangers.



BIS RapidStrut® Fixing Rail DS 5

The DS 5 has a unique hole pattern allowing BIS RapidStrut® Accessories to be mounted quickly on both sides of the rail.

For indoor and outdoor use

Extreme corrosion resistance. For more information about the BIS UltraProtect® 1000 System, see walraven.com

BIS UltraProtect® 1000

System BIS RapidStrut® – Table of rail section properties

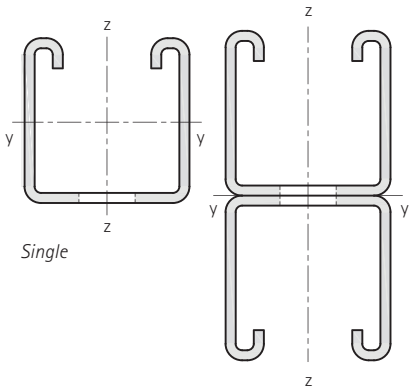

Single *Double*

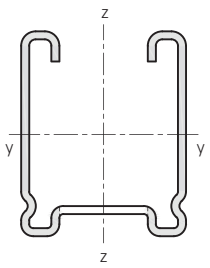

BIS RapidStrut® DS 5

Type	Weight (kg / m)	Moment of inertia cm⁴		Section modulus cm³	
		Iy	Iz	Wy	Wz
41x21 - 1.5	1.15	0.78	3.70	0.72	1.80
41x21 - 2.0	1.34	0.90	4,59	0.84	2.22
41x21 - 2.5	1.78	1.01	5.40	0.93	2.61
41x41 - 1.5	1.65	4.46	6.20	2.12	3.00
41x41 - 2.0	2.35	5.34	7.79	2.56	3.77
41x41 - 2.5	2.45	6.26	9.30	2.97	4.50
41x51 - 2.0 (DS 5)	2.62	8.81	9.49	3.44	4.60
41x62 - 2.5	3.33	18.03	13.20	5.75	6.39
41x82 - 2.5	4.08	37.31	16.89	9.00	8.18
41x21D - 2.5	3.56	5.70	10.76	2.77	5.21
41x41D - 2.5	4.90	36.79	18.56	8.91	8.99
41x62D - 2.5	6.66	111.21	26.37	17.94	12.77
41x82D - 2.5	8.16	240.93	33.90	29.38	16.42

See Rail load tables for safe working loads.

Perforation pattern of rails

Distance between rail end and first hole is always equal.

BIS RapidStrut® – 1.5 / 2.0 / 2.5 mm

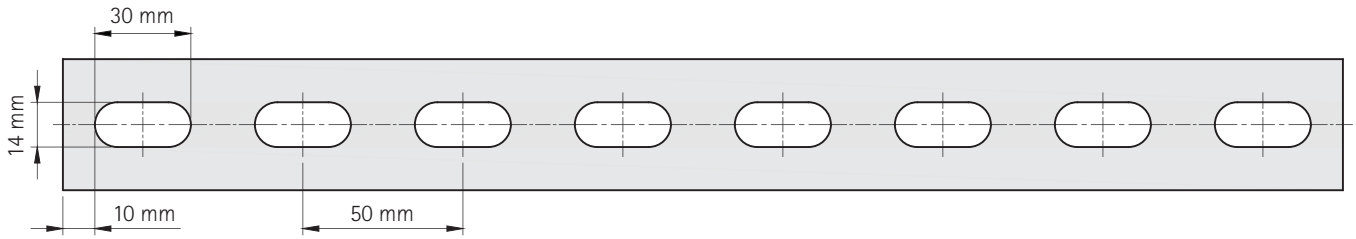

BIS RapidStrut® DS 5 – 2.0 mm

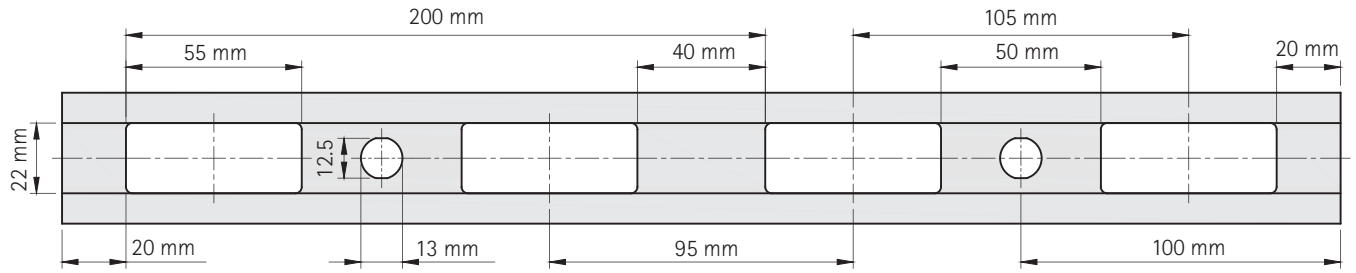

BIS RapidStrut® Fixing Rail DS 5 (BUP1000)

(H 04 05)

suspension and support





Features and Benefits

- for a quick and easy fixing
- unique hole pattern, allowing BIS RapidStrut® Accessories to be mounted on both sides of the rail
- very high corrosion resistance (BIS UltraProtect® 1000)
- corrosion protection remains intact after cutting
- strength minimal equal to Strut 41x41x2.5 mm
- with continuous perforation
- distance between rail end and first hole is always equal
- a continuous graduated centimetre scale on one side
- material: steel 1.0242
- surface protection:
  - product is part of the BIS UltraProtect® 1000 system
  - suitable for in- and outdoor applications
  - stands min. 1,000 hours salt spray test (max. 5% red rust) according to ISO 9227
- for more information about the max. allowed load ($F_{a,z}$) please refer to the loading tables or our online datasheet 'Technical Details BIS RapidStrut®'

Part No.	L	B (mm)	H (mm)	s (mm)	S (mm)	BndS	BndL	App.
65058252	2 m	41	51	2.0	22	20	80	m.
65058352	3 m	41	51	2.0	22	30	120	m.
65058652	6 m	41	51	2.0	22	60	240	m.

For more information about the max. allowed load ($F_{a,z}$) please refer to the loading tables or our online datasheet 'Technical Details BIS RapidStrut®'.

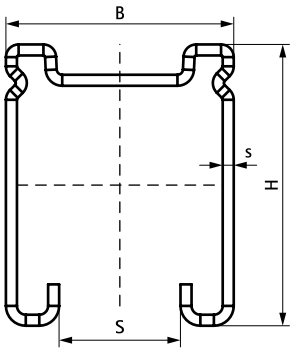

Complementary

242 BIS RapidStrut® Hammerfix G2 (BUP1000)
250 BIS RapidStrut® Rail Connector 90° G2 (BUP1000)
255 BIS RapidStrut® Rail Connector 135° G2

Complementary

258 BIS RapidStrut® Rail Connector G2 (BUP1000)
260 BIS RapidStrut® Rail Connector -
262 BIS RapidStrut® Rail

BIS RapidStrut® Fixing Rail (pg)

(H 04 10)

suspension and support



6505224 6505242 6505365 6505385

Features and Benefits

- universal rail system
- with continuous perforation
- distance between rail end and first hole is always equal
- a continuous graduated centimetre scale on one side
- inward formed flanges with serrated profile for extra grip
- material: steel 1.0242
- Part No. 6505X85 (41x82) material: steel 1.0332
- pre-galvanized
- strut 41x41x2.5 and above tested for fire safety
- for more information about the max. allowed load ($F_{a,z}$) please refer to the loading tables or our online datasheet 'Technical Details BIS RapidStrut®'

RAL GÜTEZEICHEN ROHRBEFESTIGUNG

RAL-GZ 655/C
Cert.Nr. 2012-04

Part No.	Type	L	B (mm)	H (mm)	s (mm)	S (mm)	RAL	BndS	BndL	App.	
6505224	21 | L	2 m	41	21	1.50	22	RAL[1]	20	200	m.	
6505324	21 | L	3 m	41	21	1.50	22	RAL[1]	30	300	m.	
6505624	21 | L	6 m	41	21	1.50	22	RAL[1]	60	600	m.	
6505222	21 | M	2 m	41	21	2.00	22	RAL[1]	20	200	m.	
6505322	21 | M	3 m	41	21	2.00	22	RAL[1]	30	300	m.	
6505622	21 | M	6 m	41	21	2.00	22	RAL[1]	60	600	m.	
6505225	21 | H	2 m	41	21	2.50	22	RAL[1]	20	200	m.	
6505325	21 | H	3 m	41	21	2.50	22	RAL[1]	30	300	m.	
6505625	21 | H	6 m	41	21	2.50	22	RAL[1]	60	600	m.	
6505244	41 | L	2 m	41	41	1.50	22	RAL[1]	20	100	m.	
6505344	41 | L	3 m	41	41	1.50	22	RAL[1]	30	150	m.	
6505644	41 | L	6 m	41	41	1.50	22	RAL[1]	60	300	m.	
6505242	41 | M	2 m	41	41	2.00	22	RAL[1]	20	100	m.	
6505342	41 | M	3 m	41	41	2.00	22	RAL[1]	30	150	m.	
6505642	41 | M	6 m	41	41	2.00	22	RAL[1]	60	300	m.	
6505245	41 | H	2 m	41	41	2.50	22	RAL[1]	20	100	m.	
6505345	41 | H	3 m	41	41	2.50	22	RAL[1]	30	150	m.	
6505645	41 | H	6 m	41	41	2.50	22	RAL[1]	60	300	m.	
65056453	-	6 m	41	41	3.00	22	-	-	300	m.	
6505365	62 | H	3 m	41	62	2.50	22	-	30	90	m.	
6505665	62 | H	6 m	41	62	2.50	22	-	60	180	m.	
65056653	-	6 m	41	62	3.00	22	-	-	180	m.	
6505385	82 | H	3 m	41	82	2.50	22	-	30	90	m.	
6505685	82 | H	6 m	41	82	2.50	22	-	60	180	m.	
6505620	21 | H	6 m	41	21	2.50	22	-	60	600	m.	*
6505640	41 | H	6 m	41	41	2.50	22	-	60	300	m.	*

RAL[1] = tested, certified and monitored by a third party according to RAL-GZ 655/C.
Strut 41x41x2.5 and above tested for fire safety.
** Unslotted*
For detailed technical information about our RAL marked products, please see the RAL datasheet in our web catalogue.
For more information about the max. allowed load ($F_{a,z}$) please refer to the loading tables or our online datasheet 'Technical Details BIS RapidStrut®'.

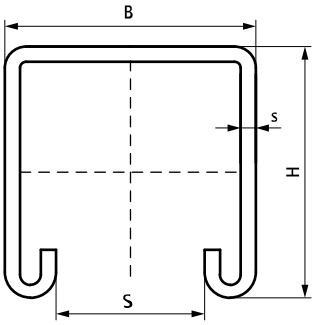

Complementary

242 BIS RapidStrut® Hammerfix G2 (BUP1000)
231 BIS RapidStrut® Slide Nut G2 (BUP1000)
279 BIS Strut Clamp with Lining

Alternative

205 BIS RapidStrut® Fixing Rail DS 5 (BUP1000)

EN-SG 02/2022- Subject to modifications

BIS RapidStrut® Fixing Rail (BUP1000)

(H 04 13)

suspension and support



Features and Benefits

- universal rail system
- corrosion protection remains intact after cutting
- with continuous perforation
- distance between rail end and first hole is always equal
- a continuous graduated centimetre scale on one side
- inward formed flanges with serrated profile for extra grip
- material: steel 1.0242
- surface protection:
  - product is part of the BIS UltraProtect® 1000 system
  - suitable for in- and outdoor applications
  - stands min. 1,000 hours salt spray test (max. 5% red rust) according to ISO 9227
- strut 41x41x2.5 and above tested for fire safety
- for more information about the max. allowed load ($F_{a,z}$) please refer to the loading tables or our online datasheet 'Technical Details BIS RapidStrut®'

RAL GÜTEZEICHEN ROHRBEFESTIGUNG

RAL-GZ 655/C
Cert.Nr. 2015-02

Part No.	Type	L	B (mm)	H (mm)	s (mm)	S (mm)	RAL	BndS	BndL	App.	
65018227	21 | H	2 m	41	21	2.50	22	RAL[1]	20	200	m.	
65018327	21 | H	3 m	41	21	2.50	22	RAL[1]	30	300	m.	
65018627	21 | H	6 m	41	21	2.50	22	RAL[1]	60	600	m.	
65018242	41 | M	2 m	41	41	2.00	22	RAL[1]	20	100	m.	
65018342	41 | M	3 m	41	41	2.00	22	RAL[1]	30	150	m.	
65018642	41 | M	6 m	41	41	2.00	22	RAL[1]	60	300	m.	
65018247	41 | H	2 m	41	41	2.50	22	RAL[1]	20	100	m.	
65018347	41 | H	3 m	41	41	2.50	22	RAL[1]	30	150	m.	
65018647	41 | H	6 m	41	41	2.50	22	RAL[1]	60	300	m.	
65018367	62 | H	3 m	41	62	2.50	22	-	90	-	m.	
65018667	62 | H	6 m	41	62	2.50	22	-	36	216	m.	
65018387	82 | H	3 m	41	82	2.50	22	-	90	-	m.	
65018687	82 | H	6 m	41	82	2.50	22	-	-	180	m.	
65018640	41 | H	6 m	41	41	2.50	22	-	60	300	m.	*

RAL[1] = tested, certified and monitored by a third party according to RAL-GZ 655/C.
Strut 41x41x2.5 and above tested for fire safety.
** Unslotted*
For detailed technical information about our RAL marked products, please see the RAL datasheet in our web catalogue.
For more information about the max. allowed load ($F_{a,z}$) please refer to the loading tables or our online datasheet 'Technical Details BIS RapidStrut®'.

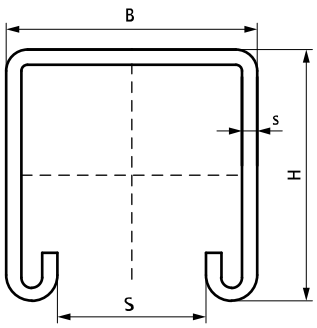

Complementary

231 BIS RapidStrut® Slide Nut G2 (BUP1000)
242 BIS RapidStrut® Hammerfix G2 (BUP1000)
308 BIS Yeti® 130 Support System

Alternative

205 BIS RapidStrut® Fixing Rail DS 5 (BUP1000)

BIS RapidStrut® Fixing Rail with Anchor Holes (pg)

(H 04 17)

suspension and support

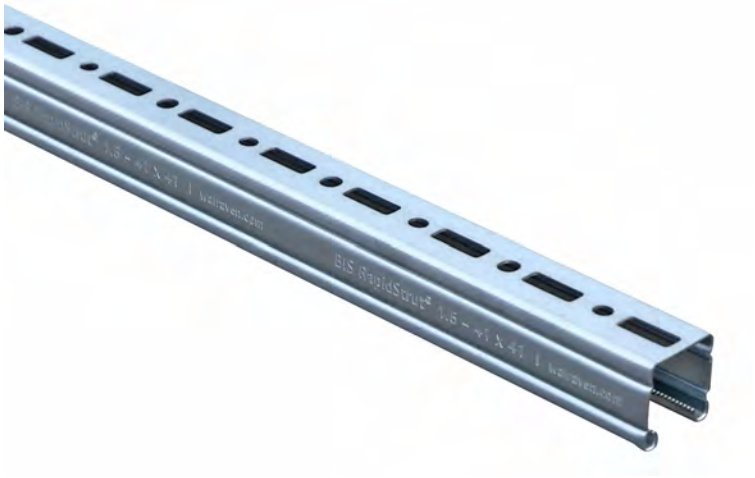

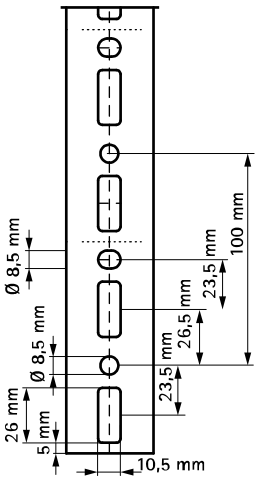

Features and Benefits

- universal rail system
- with continuous perforation
- distance between rail end and first hole is always equal
- a continuous graduated centimetre scale on one side
- inward formed flanges with serrated profile for extra grip
- material: steel 1.0242
- pre-galvanized
- for more information about the max. allowed load ($F_{a,z}$) please refer to the loading tables or our online datasheet 'Technical Details BIS RapidStrut®'

Part No.	Model	L	B (mm)	H (mm)	s (mm)	S (mm)	BndS	BndL	App.
65059224	Perforated	2 m	41	21	1.50	22	20	200	m.
65059324	Perforated	3 m	41	21	1.50	22	30	300	m.
65059624	Perforated	6 m	41	21	1.50	22	60	600	m.
65059244	Perforated	2 m	41	41	1.50	22	20	100	m.
65059344	Perforated	3 m	41	41	1.50	22	30	150	m.
65059644	Perforated	6 m	41	41	1.50	22	60	300	m.
6505944050	Perforated	0.5 m	41	41	1.50	22	-	-	pc.
6505944100	Perforated	1 m	41	41	1.50	22	-	-	pc.

For more information about the max. allowed load ($F_{a,z}$) please refer to the loading tables or our online datasheet 'Technical Details BIS RapidStrut®'.

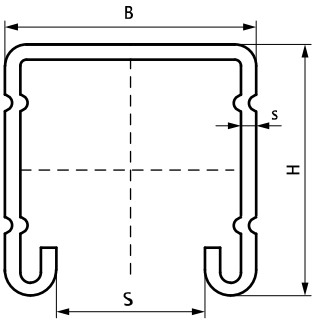

Complementary

242 BIS RapidStrut® Hammerfix G2 (BUP1000)
231 BIS RapidStrut® Slide Nut G2 (BUP1000)
279 BIS Strut Clamp with Lining

Complementary

235 BIS Strut Slide Nut (BUP1000)

Alternative

205 BIS RapidStrut® Fixing Rail DS 5 (BUP1000)

EN-SG 02/2022- Subject to modifications

BIS RapidStrut® Fixing Rail Double (pg)

(H 04 40)

suspension and support



Features and Benefits

- universal rail system
- with continuous perforation
- a continuous graduated centimetre scale on one side
- inward formed flanges with serrated profile for extra grip
- material: steel 1.0332
- pre-galvanized
- strut 41x41x2.5 and above tested for fire safety
- for more information about the max. allowed load ($F_{a,z}$) please refer to the loading tables or our online datasheet 'Technical Details BIS RapidStrut®'

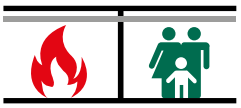

Part No.	L	B (mm)	H (mm)	s (mm)	S (mm)	BndS	BndL	App.
6505626	6 m	41	42 (21 x 2)	2.50	22	6	150	m.
6505646	6 m	41	82 (41 x 2)	2.50	22	6	300	m.
6505666	6 m	41	124 (62 x 2)	2.50	22	6	90	m.
6505686	6 m	41	164 (82 x 2)	2.50	22	6	180	m.

Strut 82 (41x2) and above tested for fire safety.
For more information about the max. allowed load ($F_{a,z}$) please refer to the loading tables or our online datasheet 'Technical Details BIS RapidStrut®'.

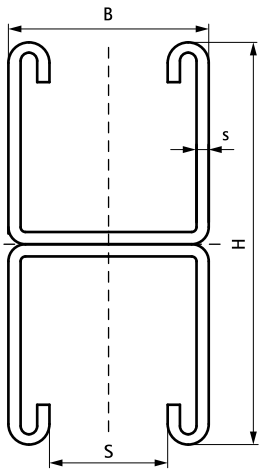

Complementary
279 BIS Strut Clamp with Lining

Alternative
205 BIS RapidStrut® Fixing Rail DS 5 (BUP1000)

EN-SG 02/2022- Subject to modifications

BIS RapidStrut® Fixing Rail Double (hdg)

(H 04 45)

suspension and support



Features and Benefits

- universal rail system
- with continuous perforation
- a continuous graduated centimetre scale on one side
- inward formed flanges with serrated profile for extra grip
- material: steel 1.0332
- hot dip galvanized
- strut 41x41x2.5 and above tested for fire safety
- for more information about the max. allowed load ($F_{a,z}$) please refer to the loading tables or our online datasheet 'Technical Details BIS RapidStrut®'

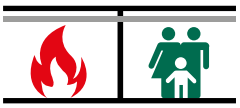

Part No.	L	B (mm)	H (mm)	s (mm)	S (mm)	BndS	BndL	App.
6501646	6 m	41	82 (41x2)	2.50	22	6	150	m.
6501666	6 m	41	124 (62x2)	2.50	22	60	90	m.
6501686	6 m	41	164 (82x2)	2.50	22	6	90	m.

Strut 82 (41x2) and above tested for fire safety.
For more information about the max. allowed load ($F_{a,z}$) please refer to the loading tables or our online datasheet 'Technical Details BIS RapidStrut®'.

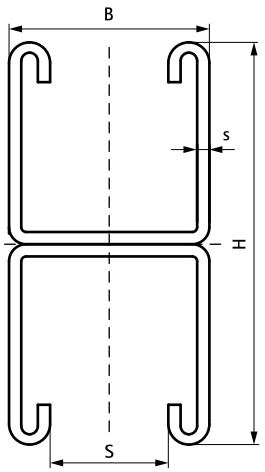

Complementary

237 BIS Strut Slide Nut (hdg)

Alternative

205 BIS RapidStrut® Fixing Rail DS 5 (BUP1000)

EN-SG 02/2022- Subject to modifications

BIS RapidStrut® Cantilever Arm (BUP1000)

(H 08 05)

fixing to wall



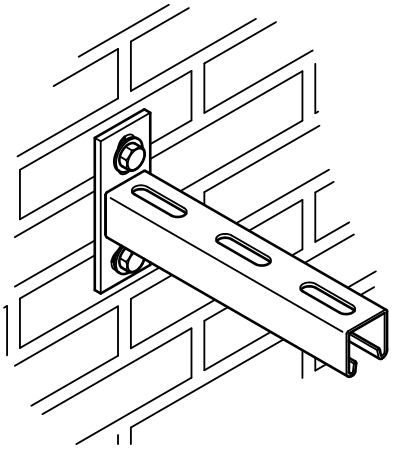

Features and Benefits

- wall plate welded on Strut Profile
- slots at 90° to each other to simplify fixing
- CO_2 welded
- inward formed flanges with serrated profile for extra grip
- material: steel 1.0226
- surface protection:
  - product is part of the BIS UltraProtect® 1000 system
  - suitable for in- and outdoor applications
  - stands min. 1,000 hours salt spray test (max. 5% red rust) according to ISO 9227
- tested for fire safety
- for more information about the max. allowed load ($F_{a,z}$) please refer to the loading tables or our online datasheet 'Technical Details BIS RapidStrut®'

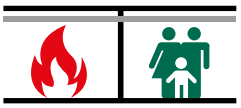

Part No.	L	H (mm)	h (mm)	s (mm)	d1 (mm)	S (mm)	k (mm)	From Rail	Pack 1
6603831	200 mm	110	70.0	5.0	25 x 11	22	70.0	Strut 41x21x2.5	10
6603832	300 mm	110	70.0	5.0	25 x 11	22	70.0	Strut 41x21x2.5	10
6603833	450 mm	110	70.0	5.0	25 x 11	22	70.0	Strut 41x21x2.5	20
6603834	600 mm	110	70.0	5.0	25 x 11	22	70.0	Strut 41x21x2.5	10
6603923	300 mm	130	87.5	7.0	30 x 13	22	87.5	Strut 41x41x2.0	10
6603926	450 mm	130	87.5	7.0	30 x 13	22	87.5	Strut 41x41x2.0	10
6603928	600 mm	130	87.5	7.0	30 x 13	22	87.5	Strut 41x41x2.0	8
6603861	150 mm	130	87.5	7.0	30 x 13	22	87.5	Strut 41x41x2.5	10
6603870	200 mm	130	87.5	7.0	30 x 13	22	87.5	Strut 41x41x2.5	10
6603862	300 mm	130	87.5	7.0	30 x 13	22	87.5	Strut 41x41x2.5	10
6603871	400 mm	130	87.5	7.0	30 x 13	22	87.5	Strut 41x41x2.5	10
6603863	450 mm	130	87.5	7.0	30 x 13	22	87.5	Strut 41x41x2.5	10
6603873	500 mm	130	87.5	7.0	30 x 13	22	87.5	Strut 41x41x2.5	10
6603864	600 mm	130	87.5	7.0	30 x 13	22	87.5	Strut 41x41x2.5	8
6603865	750 mm	130	87.5	7.0	30 x 13	22	87.5	Strut 41x41x2.5	8
6603866	1,000 mm	130	87.5	7.0	30 x 13	22	87.5	Strut 41x41x2.5	1
6603867	1,200 mm	130	87.5	7.0	30 x 13	22	87.5	Strut 41x41x2.5	1

Strut 41x41x2.5 and above tested for fire safety.
For more information about the max. allowed load ($F_{a,z}$) please refer to the loading tables or our online datasheet 'Technical Details BIS RapidStrut®'.

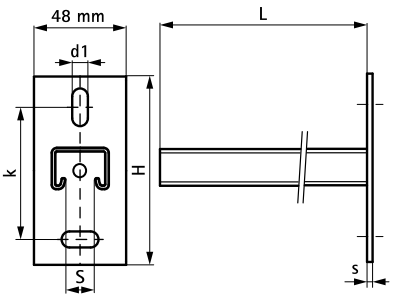

Complementary

425 BIS Washer (BUP1000)
224 BIS Rail Prop (BUP1000)

BIS RapidStrut® Cantilever Arm Vertical (BUP1000)

(H 08 07)



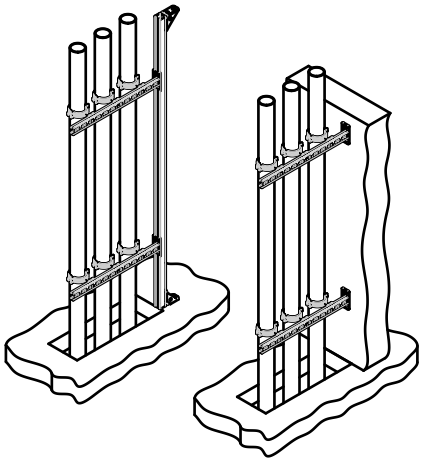

Features and Benefits

- vertical welded cantilever arm for vertical pipe installations
- perfect solution for shaft situations with or without wall
- optimal utilization of the available space in shafts
- CO_2 welded
- inward formed flanges with serrated profile for extra grip
- material: steel 1.0226
- surface protection:
  - product is part of the BIS UltraProtect® 1000 system
  - suitable for in- and outdoor applications
  - stands min. 1,000 hours salt spray test (max. 5% red rust) according to ISO 9227

Part No.	L	B (mm)	H (mm)	s (mm)	d1 (mm)	S (mm)	k (mm)	From Rail	Pack 1
6603828	300 mm	48	130	5.0	25 x 11	22	90	Strut 41x21	10
6603829	600 mm	48	130	5.0	25 x 11	22	90	Strut 41x21	10

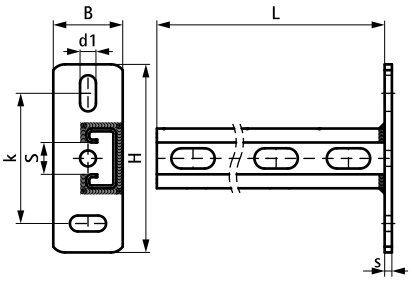

Complementary

207 BIS RapidStrut® Fixing Rail (BUP1000)
231 BIS RapidStrut® Slide Nut G2 (BUP1000)
242 BIS RapidStrut® Hammerfix G2 (BUP1000)

Complementary

240 BIS RapidStrut® Slide Nut
478 WTB1 Throughbolt Anchor

EN-SG 02/2022- Subject to modifications

BIS RapidStrut® Cantilever Arm 41x41D (BUP1000)

(H 08 10)

fixing to wall



Features and Benefits

- wall plate welded on Strut Profile
- slots at 90° to each other to simplify fixing
- CO_2 welded
- inward formed flanges with serrated profile for extra grip
- material: steel 1.0332
- surface protection:
  - product is part of the BIS UltraProtect® 1000 system
  - suitable for in- and outdoor applications
  - stands min. 1,000 hours salt spray test (max. 5% red rust) according to ISO 9227
- tested for fire safety

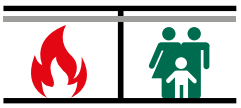

Part No.	L	B (mm)	H (mm)	s1 (mm)	d1 (mm)	S (mm)	k (mm)	From Rail	Pack 1
6603883	450 mm	45	175	8.0	30 x 13	22	137.5	Strut 41x41Dx2.5	8
6603884	600 mm	45	175	8.0	30 x 13	22	137.5	Strut 41x41Dx2.5	4
6603885	750 mm	45	175	8.0	30 x 13	22	137.5	Strut 41x41Dx2.5	4
6603886	1,000 mm	45	175	8.0	30 x 13	22	137.5	Strut 41x41Dx2.5	1

Strut 82 (41x2) and above tested for fire safety.
For more information about the max. allowed load ($F_{a,z}$) please refer to the loading tables or our online datasheet 'Technical Details BIS RapidStrut®'.

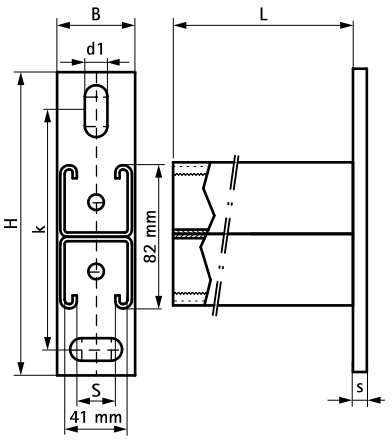

BIS RapidStrut® Cantilever Arm with Rail Prop

(H 08 15)

fixing to wall



Features and Benefits

- wall plate welded on Strut Profile
- CO_2 welded
- with prop
- inward formed flanges with serrated profile for extra grip
- material: steel 1.0332
- hot dip galvanized

Part No.	L	B (mm)	H (mm)	s (mm)	d1 (mm)	S (mm)	k (mm)	From Rail	$F_{a,z}$ (N)	Pack 1
6601894	600 mm	50	350	4.0	23 x 13	22	311.5	Strut 41x41	1,400	1

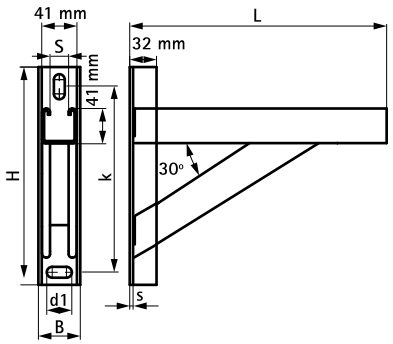

Complementary

237 BIS Strut Slide Nut (hdg)

EN-SG 02/2022- Subject to modifications

Cantilever Arm for WMO Strut

(H 08 200)





Features and Benefits

- mounts directly to the wall or ceiling without all thread, allowing for a tight mounting
- a large variety of clamps can be attached to the cantilever with only a single screw or other accessories
- pre-assembled for quick installation
- material: steel 1.0226
- hot dip galvanized

Part No.	Pack 1
66090110	25

EN-SG 02/2022- Subject to modifications

BIS RapidStrut® Base Plate G2 (BUP1000)

(H 12 03)



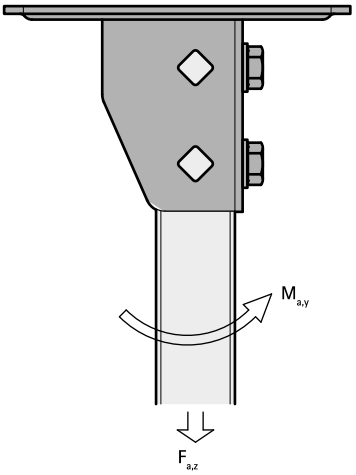

Features and Benefits

- flexible base plate for Strut rails
- suitable for all Strut rail up to 82mm height
- open side of rails 41x41 can be turned to all sides
- at high loads we advise to install with throughbolts
- timesaving with pre-assembled fasteners
- material: metal parts made of steel 1.0332; spring(s) made of POM (polyoxymethylene), green
- surface protection:
  - product is part of the BIS UltraProtect® 1000 system
  - suitable for in- and outdoor applications
  - stands min. 1,000 hours salt spray test (max. 5% red rust) according to ISO 9227
- tested for fire safety

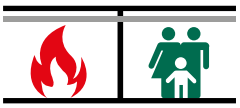

Part No.	L	B (mm)	H (mm)	h (mm)	s (mm)	d1 (mm)	S (mm)	k (mm)	k1 (mm)	$F_{a,z}$ (N)	$F_{a,z\ 2}$ (N)	$M_{a,y}$ (Nm)	Pack 1
665885400	107 mm	85	180	56	4.0	20 x 14	42	130	50	3,636	5,151	485.0	10

$F_{a,z}$: max. allowed load in combination with 2 slide nuts M10, tightened with 40 Nm.
$F_{a,z}$ 2: max. allowed load in combination with 2 throughbolts M10, tightened with 40 Nm.
$M_{a,y}$: max. moment in combination with 2 throughbolts M10, tightened with 40 Nm.

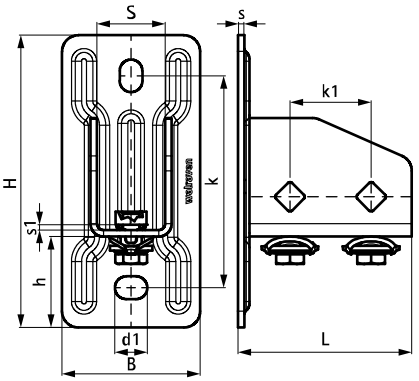

Complementary
205 BIS RapidStrut® Fixing Rail DS 5 (BUP1000)
207 BIS RapidStrut® Fixing Rail (BUP1000)
240 BIS RapidStrut® Slide Nut

Complementary
168 BIS Washer (Flat) (BUP1000)
423 BIS Hexagon Head Bolt (BUP1000)
478 WTB1 Throughbolt Anchor

Alternative
219 BIS Strut Base Plate Heavy Duty (BUP1000)

EN-SG 02/2022- Subject to modifications

BIS Strut Base Plate G2 (zp)

(H 12 11)



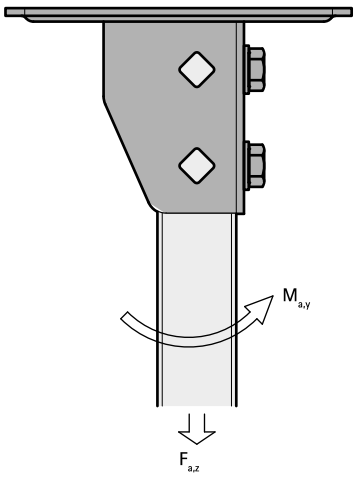

Features and Benefits

- flexible base plate for Strut rails
- suitable for all Strut rail up to 82mm height
- open side of rails 41x41 can be turned to all sides
- at high loads we advise to install with throughbolts
- material: steel
- zinc plated

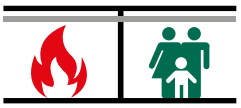

Part No.	L	B (mm)	H (mm)	h (mm)	s (mm)	d1 (mm)	S (mm)	k (mm)	$F_{a,z}$ (N)	$F_{a,z\ 2}$ (N)	$M_{a,y}$ (Nm)	Pack 1
66583804	107 mm	85	180	56	4.0	20 x 14	42	50	3,636	5,151	485.0	10

$F_{a,z}$: max. allowed load in combination with 2 slide nuts M10, tightened with 40 Nm.
$F_{a,z}$ 2: max. allowed load in combination with 2 throughbolts M10, tightened with 40 Nm.
$M_{a,y}$: max. moment in combination with 2 throughbolts M10, tightened with 40 Nm.

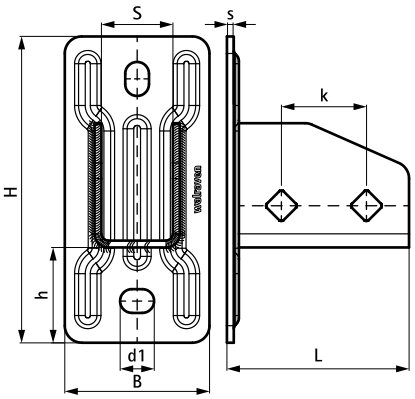

Complementary

206 BIS RapidStrut® Fixing Rail (pg)
241 BIS RapidStrut® Slide Nut with Plastic Tabs (zp)
169 BIS Washer (Flat)

Complementary

478 WTB1 Throughbolt Anchor
424 BIS Hexagon Head Bolt

Alternative

216 BIS RapidStrut® Base Plate G2 (BUP1000)
219 BIS Strut Base Plate Heavy Duty (BUP1000)

BIS Strut T-shape Base Plate (BUP1000)

(H 12 12)



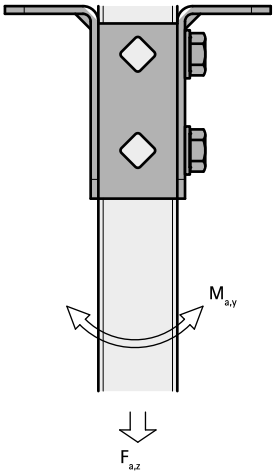

Features and Benefits

- highly flexible base plate for Strut rails
- open side of the rail can be turned to all sides
- extra safety by reinforced bending
- hole pattern is adapted to the hole pattern of Strut rails
- material: steel 1.0242 (S250GD) + ZM310 MAC
- surface protection:
  - product is part of the BIS UltraProtect® 1000 system
  - suitable for in- and outdoor applications
  - stands min. 1,000 hours salt spray test (max. 5% red rust) according to ISO 9227

Part No.	L	B (mm)	H (mm)	h (mm)	s (mm)	d1 (mm)	S (mm)	k (mm)	k1 (mm)	$F_{a,z}$ (N)	$F_{a,z\ 2}$ (N)	$M_{a,y}$ (Nm)	Pack 1
66588361	138 mm	45	100	91	4.0	18 x 12	42	95	50	3,636	3,636	164.0	10

$F_{a,z}$: max. allowed load in combination with 2 slide nuts M10, tightened with 40 Nm.
$F_{a,z}$ 2: max. allowed load in combination with 2 throughbolts M10, tightened with 40 Nm.
$M_{a,y}$: max. moment in combination with 2 throughbolts M10, tightened with 40 Nm.

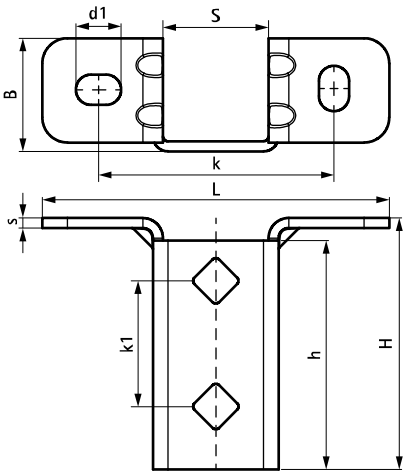

Complementary

207 BIS RapidStrut® Fixing Rail (BUP1000)
240 BIS RapidStrut® Slide Nut
168 BIS Washer (Flat) (BUP1000)

Complementary

423 BIS Hexagon Head Bolt (BUP1000)
478 WTB1 Throughbolt Anchor
308 BIS Yeti® 130 Support System

Alternative

216 BIS RapidStrut® Base Plate G2 (BUP1000)
219 BIS Strut Base Plate Heavy Duty (BUP1000)

EN-SG 02/2022- Subject to modifications

BIS Strut Base Plate Heavy Duty (BUP1000)

(H 12 13)



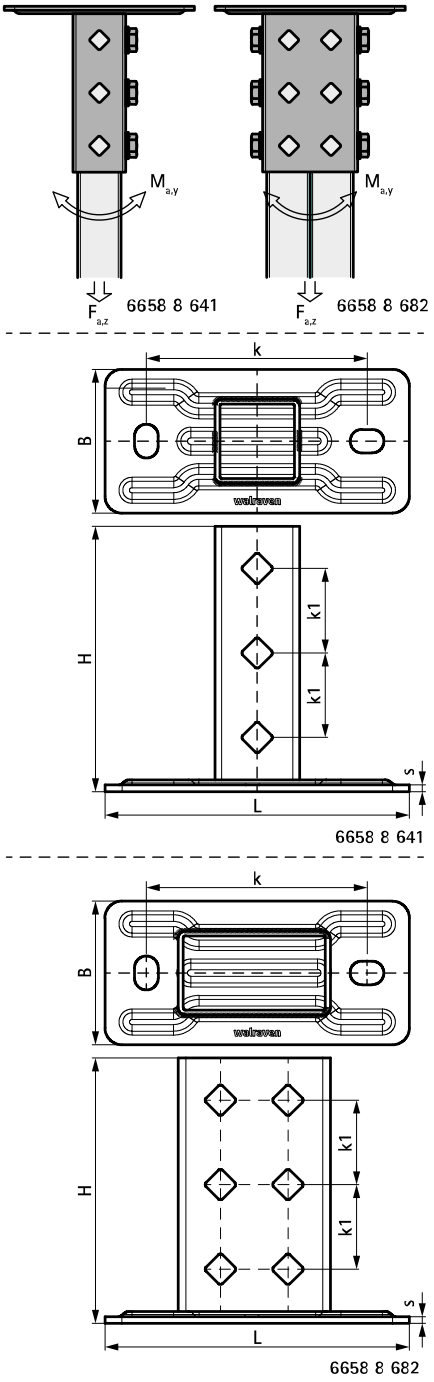

Features and Benefits

- heavy base plate for Strut rails
- can be used together with slide nut with plastic tabs or throughbolts
- hole pattern is adapted to the hole pattern of Strut rails
- closed profile for increased structural strength
- material: steel 1.0332
- surface protection:
  - product is part of the BIS UltraProtect® 1000 system
  - suitable for in- and outdoor applications
  - stands min. 1,000 hours salt spray test (max. 5% red rust) according to ISO 9227

Part No.	L	B (mm)	H (mm)	s (mm)	k (mm)	k1 (mm)	For Rail	$F_{a,z}$ (N)	$F_{a,z\ 2}$ (N)	$M_{a,y}$ (Nm)	Pack 1
66588641	180 mm	85	157	4.0	130	50	Strut 41x41 + 41x21D	4,242	5,303	258.0	10
66588682	180 mm	85	157	4.0	130	50	Strut 41x82 + Strut 41x41D	7,273	10,303	606.0	5

Part No. 66588641: $F_{a,z}$: max. allowed load in combination with 3 slide nuts M10, tightened with 40 Nm.
Part No. 66588682: $F_{a,z}$: max. allowed load in combination with 6 slide nuts M10, tightened with 40 Nm.
$F_{a,z}$ 2: max. allowed load in combination with 2 throughbolts M10, tightened with 40 Nm.
$M_{a,y}$: max. moment in combination with 2 throughbolts M10, tightened with 40 Nm.

Complementary
207 BIS RapidStrut® Fixing Rail (BUP1000)
240 BIS RapidStrut® Slide Nut
168 BIS Washer (Flat) (BUP1000)

Complementary
423 BIS Hexagon Head Bolt (BUP1000)
478 WTB1 Throughbolt Anchor
209 BIS RapidStrut® Fixing Rail Double (pg)

Alternative
216 BIS RapidStrut® Base Plate G2 (BUP1000)

BIS Strut Wall Plate (Hinged) (BUP1000)

(H 12 25)

fixing to wall



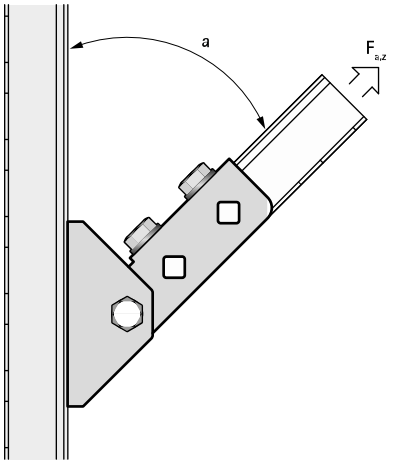

Features and Benefits

- wall plate with hinging U-profile
- for wall fixing of rail
- rail can be fixed with slot downwards or sideways
- also used to strengthen constructions with Strut 41x41
- material: steel 1.0332
- surface protection:
  - product is part of the BIS UltraProtect® 1000 system
  - suitable for in- and outdoor applications
  - stands min. 1,000 hours salt spray test (max. 5% red rust) according to ISO 9227

Part No.	L	B (mm)	H (mm)	b (mm)	s (mm)	d1 (mm)	d2 (mm)	S (mm)	k (mm)	k1 (mm)	For Rail	$F_{a,z}$ (N)	Pack 1	
66588814	120 mm	83	157	59	4.0	25x12.2	13.8	42	71	50	Strut	2,500	10	*

Max. allowed load ($F_{a,z}$) under an angle of 45°.
** Tested with rail 41x41x2.5 with throughbolts. More details can be found on the Technical Datasheet.*

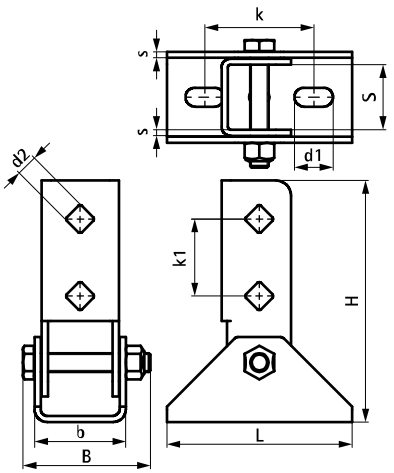

Complementary

206 BIS RapidStrut® Fixing Rail (pg)

EN-SG 02/2022- Subject to modifications

BIS Adjustable Support Bracket

(H 12 42)

support bracket fastener for height adjustable rail installation





Features and Benefits

- height adjustment range 135mm to 210mm also in installed state (left/right thread)
- suitable for all Strut rails (advised to use open side down for flexibility to meet the holes)
- use up to class 1-2 according to Eurocode 5 (indoor and covered outdoor area without weather influences)
- material: metal parts made of steel S235JR; protection cover made of plastic, grey
- zinc plated (Zn-Fe zinc / iron coating)

Part No.	L	L2 (mm)	B (mm)	H (mm)	s (mm)	s1 (mm)	d1 (mm)	d2 (mm)	k (mm)	k1 (mm)	Pack 1
66583810	160 mm	80	80	135-200	6.0	6.0	20 x 13	Ø 13.0	129	50	-

For a detailed calculation and for support how to spread the load please contact Walraven Technical Support.
In cases where a foot is used in roof applications, the installer is obliged to verify maximum load capacity of roof before installation.

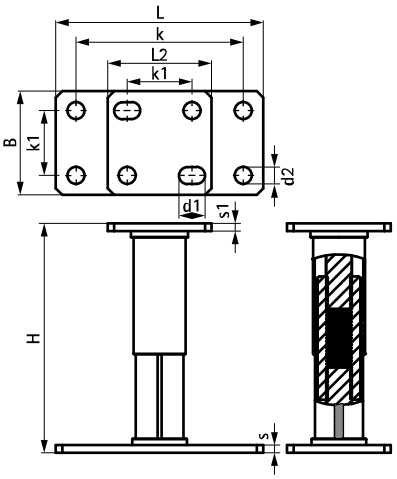

Complementary

241 BIS RapidStrut® Slide Nut with Plastic Tabs (zp)
478 WTB1 Throughbolt Anchor
206 BIS RapidStrut® Fixing Rail (pg)

BIS Strut T-Bracket

(H 12 50)

fixing to wall



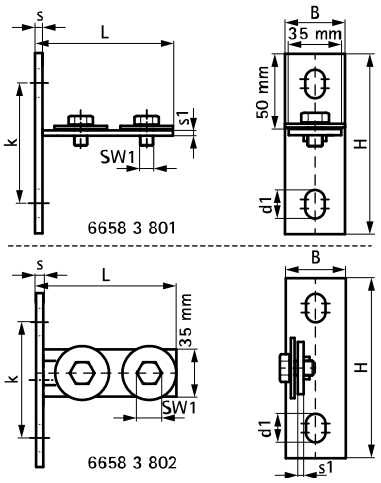

Features and Benefits

- for small spans in constructions with Strut Rail
- quick installation
- with pre-assembled screws and washers
- material: steel 1.0332

Part No.	Model	L	B (mm)	H (mm)	s (mm)	s1 (mm)	d1 (mm)	k (mm)	SW1 (mm)	$T_{(max.)}$ (Nm)	For Rail	ST	Pack 1
66583801	Horizontal	104 mm	40	120	5.0	4.0	19 x 13	80	17	15.0	Strut 41x21 + 41x41 + 41x21D	zinc plated	25
66583802	Vertical	104 mm	40	120	5.0	4.0	19 x 13	80	17	15.0	Strut 41x21 + 41x41 + 41x21D	zinc plated	25

EN-SG 02/2022- Subject to modifications

BIS Adjustable Support (BUP1000)

(H 12 53)

fixing to wall



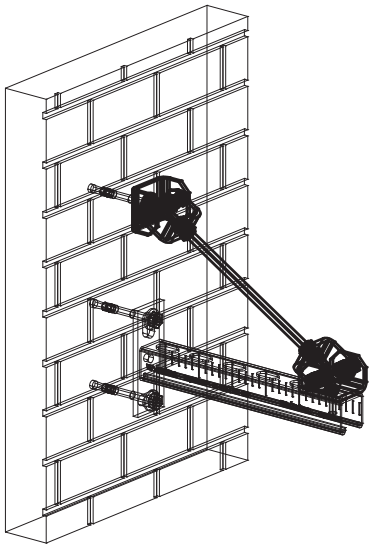

Features and Benefits

- especially for angled installations with bracings
- suitable for fixing to walls or fixing rails
- adjustable angle up to 90°
- with two holes Ø13 mm
- material: steel
- surface protection:
  - product is part of the BIS UltraProtect® 1000 system
  - suitable for in- and outdoor applications
  - stands min. 1,000 hours salt spray test (max. 5% red rust) according to ISO 9227

Part No.	L	B (mm)	H (mm)	d1 (mm)	d2 (mm)	For Rail	$F_{a,z}$ (N)	ST	Pack 1
66588818	50 mm	78	63	Ø 13.0	Ø 13.0	Strut	5,000	BIS UltraProtect® 1000	10
Max. allowed load: when used at an angle of 45° on wall/ceiling.									

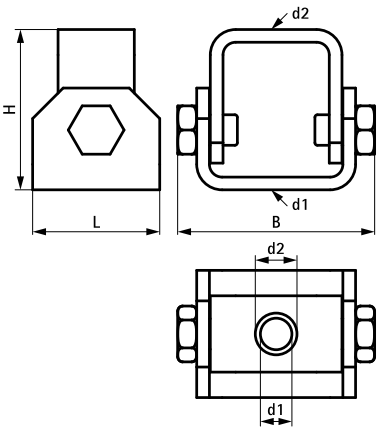

BIS Rail Prop (BUP1000)

(H 16 05)

reinforcement of cantilever arm



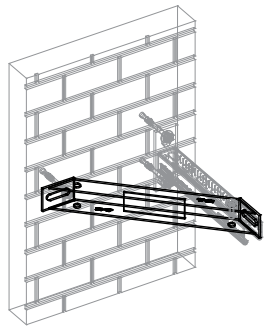

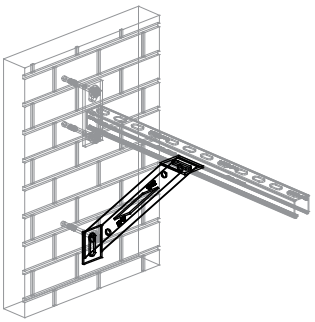

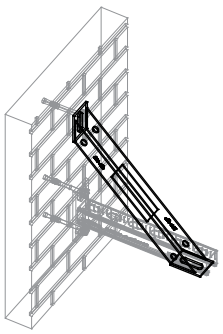

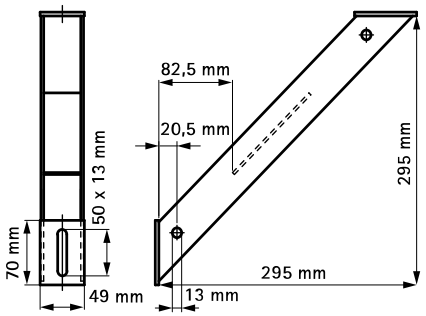

Features and Benefits

- 45° support bracket
- for fixing support under, top or on side of a cantilever arm
- also used to strengthen rail constructions
- CO_2 welded
- material: steel 1.0332
- surface protection:
  - product is part of the BIS UltraProtect® 1000 system
  - suitable for in- and outdoor applications
  - stands min. 1,000 hours salt spray test (max. 5% red rust) according to ISO 9227

Part No.	For Rail	Pack 1
66288530	Strut + WM35	10

Complementary

205 BIS RapidStrut® Fixing Rail DS 5 (BUP1000)

211 BIS RapidStrut® Cantilever Arm (BUP1000)

EN-SG 02/2022- Subject to modifications

BIS Flexible Rail Prop

(H 16 07)

reinforcement of rail fabrications



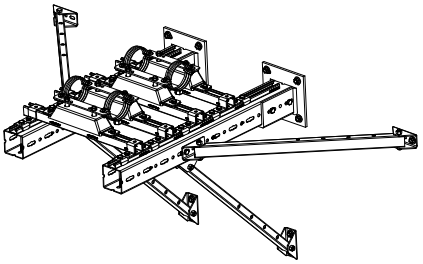

Features and Benefits

- flexible angle support bracket
- to strengthen rail constructions
- by additional holes the length can be reduced in steps of 100mm
- suitable for Strut rails and for Maxx rails
- material: u-plate steel 1.0242 (S250GD); tube profile: steel 1.0038 (S235JR)
- u-plate: Z275-MAC (pre-galvanized); tube profile: hot-dip galvanized 50-80 µm

Part No.	L	B (mm)	H (mm)	d1 (mm)	k (mm)	Fa,z (N)	Pack 1
6621083	929	83	92	25 x 12.2	70.6	7,500	1

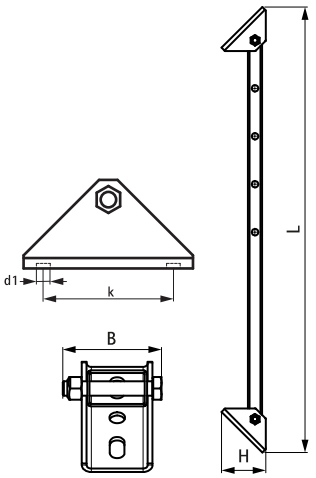

Complementary

206 BIS RapidStrut® Fixing Rail (pg)
209 BIS RapidStrut® Fixing Rail Double (pg)
478 WTB1 Throughbolt Anchor

Alternative

224 BIS Rail Prop (BUP1000)

EN-SG 02/2022- Subject to modifications

BIS RapidStrut Construction Bracket (BUP1000)

(H 16 20)

to make Strut rail fabrications



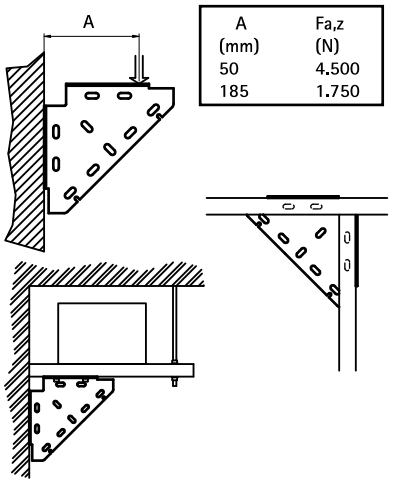

Features and Benefits

- one-part support
- for fixing support under, top or on side of a cantilever arm
- also used to strengthen rail constructions
- material: steel 1.0332
- surface protection:
  - product is part of the BIS UltraProtect® 1000 system
  - suitable for in- and outdoor applications
  - stands min. 1,000 hours salt spray test (max. 5% red rust) according to ISO 9227

Part No.	For Rail	Pack 1
65938020	Strut + WM35	10

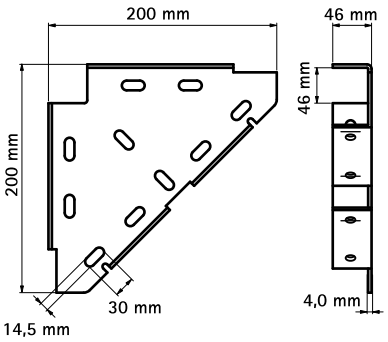

Complementary

205 BIS RapidStrut® Fixing Rail DS 5 (BUP1000)

Alternative

227 BIS RapidStrut Corner Bracket (BUP1000)

EN-SG 02/2022- Subject to modifications

BIS RapidStrut Corner Bracket (BUP1000)

(H 16 35)

to make Strut rail fabrications



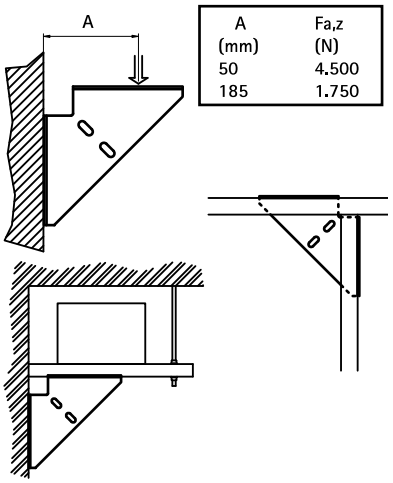

Features and Benefits

- one-part support
- for fixing support under, top or on side of a cantilever arm
- also used to strengthen rail constructions
- material: steel 1.0332
- surface protection:
  - product is part of the BIS UltraProtect® 1000 system
  - suitable for in- and outdoor applications
  - stands min. 1,000 hours salt spray test (max. 5% red rust) according to ISO 9227

Part No.	For Rail	Pack 1
66038020	Strut + WM35	10

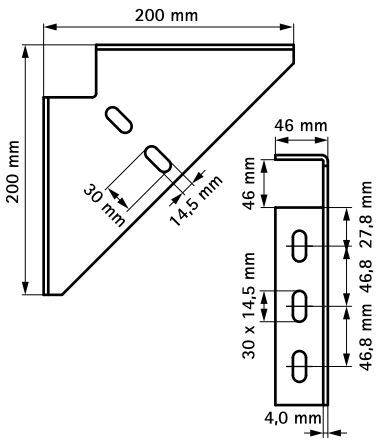

Complementary

205 BIS RapidStrut® Fixing Rail DS 5 (BUP1000)

Alternative

226 BIS RapidStrut Construction Bracket (BUP1000)

EN-SG 02/2022- Subject to modifications

BIS Strut Floor Bracket

(H 16 50)

to make Strut rail fabrications





Features and Benefits

- to make fabrication with Strut Rail
- easy fitting due to rounded edges
- material: steel 1.0332

Part No.	L	B (mm)	H (mm)	s (mm)	s1 (mm)	d1 (mm)	For Rail	ST	Pack 1
66583602	120 mm	100	44	4.0	4.0	Ø 13	Strut 41x41	zinc plated	15

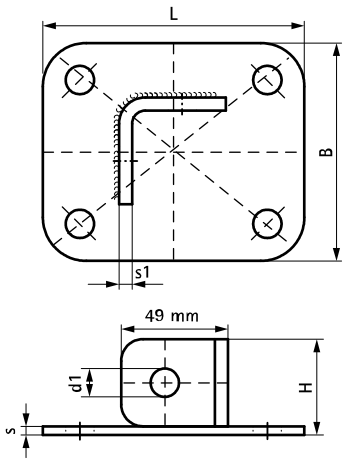

EN-SG 02/2022- Subject to modifications

BIS Console Kit Clim ISO - Strut (Wall Rail)

(H 19 10)

wall fixing of appliances



Features and Benefits

- universal fixing kit
- for wall fixing of airconditioners, heaters, compressors and other heavy duty material
- material: steel 1.0332
- hot dip galvanized
- noise insulation by use of vibration isolators (support made of vulcanized rubber)
- consists of:
  - 2 Cantilever arms of Strut 41x41
  - 2 lengths of Strut 41x21
  - 4 Vibration isolators
  - 2 Rail End Caps

Part No.	L	$T_{(max.)}$ (Nm)	From Rail	$F_{a,z}$ (N)	Pack 1
6901945	450 mm	15.0	Strut 41x41	2,000	1
6901960	600 mm	15.0	Strut 41x41	1,200	1

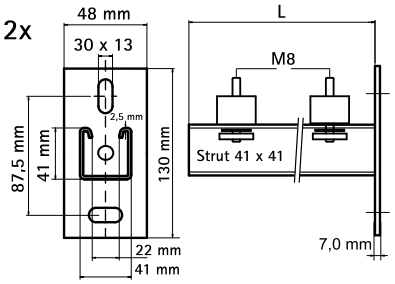

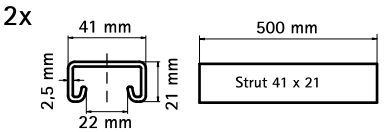

Alternative

230 BIS Console Kit Clim ISO - Strut

EN-SG 02/2022- Subject to modifications

BIS Console Kit Clim ISO - Strut

(H 19 15)

wall fixing of appliances



Features and Benefits

- universal fixing kit
- for wall fixing of airconditioners, heaters, compressors and other heavy duty material
- vibration isolators pre-assembled with slide nut, washer and hexagon head lock-nut
- vibration isolators pre-assembled on cantilever arm
- material: steel 1.0332
- hot dip galvanized
- noise insulation by use of vibration isolators (support made of vulcanized rubber)
- consists of:
  - 2 Cantilever arms of Strut 41x41
  - 4 Vibration isolators
  - 2 Rail End Caps

Part No.	L	$T_{(max.)}$ (Nm)	From Rail	$F_{a,z}$ (N)	Pack 1
6901860	600 mm	15.0	Strut 41x41	1,200	1

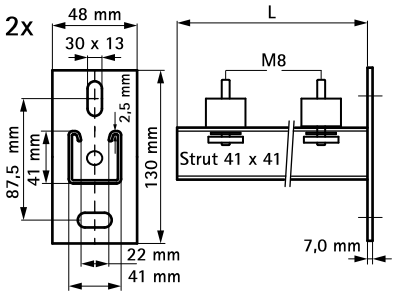

Alternative

229 BIS Console Kit Clim ISO - Strut (Wall Rail)

EN-SG 02/2022- Subject to modifications

BIS RapidStrut® Slide Nut G2 (BUP1000)

(H 24 04)

fixing to Strut rail





Features and Benefits

- slide nut with washer and BIS RapidStrut® spring
- ready-to-use pre-assembled for a quick fixing, and retains assembly in place before final tightening
- material: metal parts made of steel 1.0332; spring(s) made of POM (polyoxymethylene), green
- surface protection:
  - product is part of the BIS UltraProtect® 1000 system
  - suitable for in- and outdoor applications
  - stands min. 1,000 hours salt spray test (max. 5% red rust) according to ISO 9227

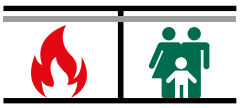

Part No.	G	s (mm)	T_{inst} (Nm)	For Rail	$F_{a,z}$ (N)	$F_{a,x}$ (N)	Pack 1	Pack 2
665185106	M6	5.0	7	Strut	2,660	950	20	200
665185108	M8	6.0	11	Strut	3,120	1,100	20	200
665185110	M10	8.0	15	Strut	5,000	1,250	20	200
665185112	M12	9.0	22	Strut	5,000	2,440	20	200

M10 and above tested for fire safety.
Tested values in combination with BIS RapidStrut® Rail 41x41x2.5mm.
More details can be found on the Technical Datasheet.

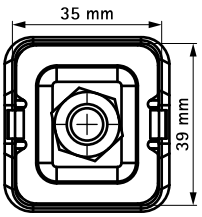

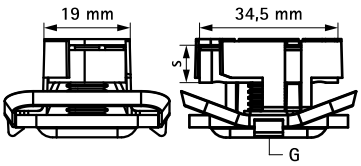

Complementary

205 BIS RapidStrut® Fixing Rail DS 5 (BUP1000)
211 BIS RapidStrut® Cantilever Arm (BUP1000)

EN-SG 02/2022- Subject to modifications

BIS RapidStrut® Slide Nut MS (BUP1000)

(H 24 09)

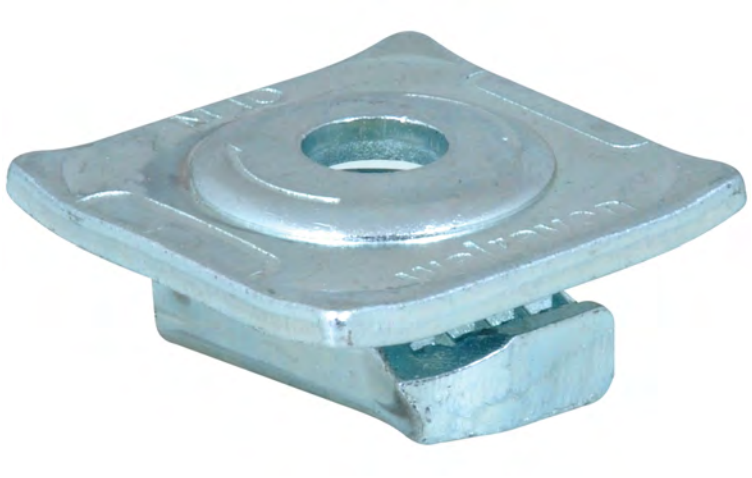

Features and Benefits

- slide nut with washer and metal spring
- ready-to-use pre-assembled for a quick fixing, and retains assembly in place before final tightening
- solid washer for strong connection
- robust since completely made from metal
- material: steel
- surface protection:
  - product is part of the BIS UltraProtect® 1000 system
  - suitable for in- and outdoor applications
  - stands min. 1,000 hours salt spray test (max. 5% red rust) according to ISO 9227

Part No.	G	L	L2 (mm)	B (mm)	B2 (mm)	H (mm)	s (mm)	s1 (mm)	T_{inst} (Nm)	For Rail	$F_{a,z}$ (N)	$F_{a,x}$ (N)	Pack 1
66518308	M8	43 mm	19 mm	43	34	20	4.0	8.0	25.0	Strut	4,450	1,450	150
66518310	M10	43 mm	19 mm	43	34	20	4.0	8.0	30.0	Strut	5,000	1,810	150
66518312	M12	43 mm	19 mm	43	34	20	4.0	10.0	40.0	Strut	5,000	2,790	150

Tested values in combination with BIS RapidStrut® Rail 41x41x2.5mm.
More details can be found on the Technical Datasheet.

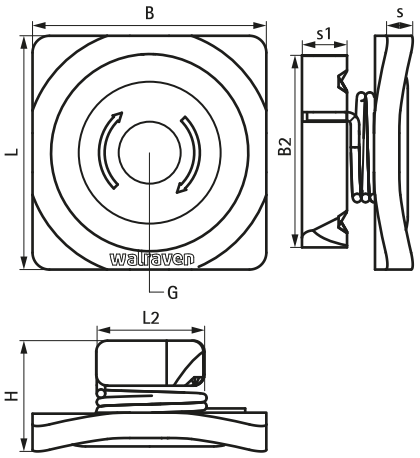

Complementary

207 BIS RapidStrut® Fixing Rail (BUP1000)
213 BIS RapidStrut® Cantilever Arm 41x41D (BUP1000)
211 BIS RapidStrut® Cantilever Arm (BUP1000)

Alternative

231 BIS RapidStrut® Slide Nut G2 (BUP1000)
241 BIS RapidStrut® Slide Nut with Plastic Tabs (zp)

EN-SG 02/2022- Subject to modifications

BIS RapidStrut® Slide Nut MS (ZP)

(H 24 11)

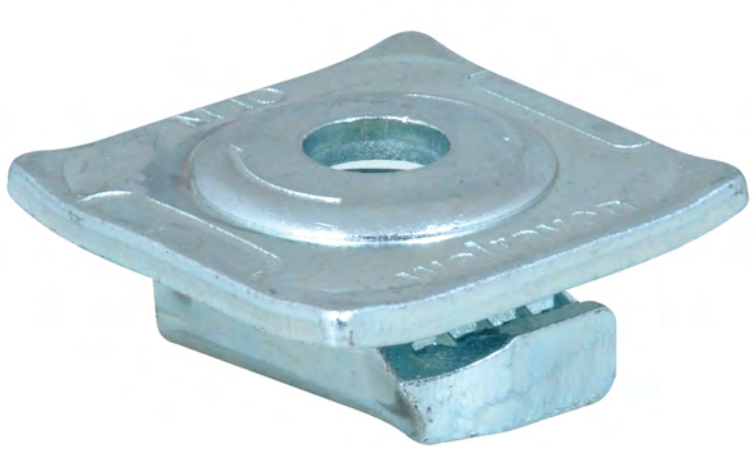

Features and Benefits

- slide nut with washer and metal spring
- ready-to-use pre-assembled for a quick fixing, and retains assembly in place before final tightening
- solid washer for strong connection
- robust since completely made from metal
- material: steel
- zinc plated

Part No.	G	L	L2 (mm)	B (mm)	B2 (mm)	H (mm)	s (mm)	s1 (mm)	T_{inst} (Nm)	For Rail	$F_{a,z}$ (N)	$F_{a,x}$ (N)	Pack 1
66513108	M8	43 mm	19 mm	43	34	43	4.0	8.0	25.0	Strut	4,450	1,450	150
66513110	M10	43 mm	19 mm	43	34	20	4.0	8.0	30.0	Strut	5,000	1,810	150
66513112	M12	43 mm	19 mm	43	34	20	4.0	10.0	40.0	Strut	5,000	2,790	150

Tested values in combination with BIS RapidStrut® Rail 41x41x2.5mm.
More details can be found on the Technical Datasheet.

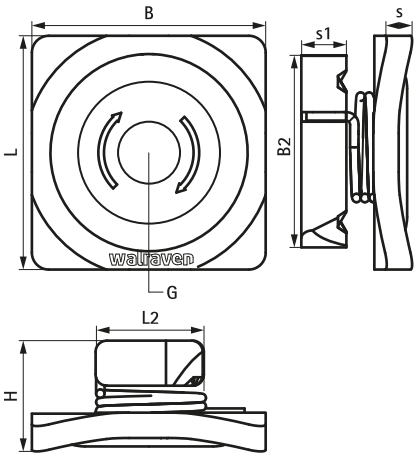

Complementary

206 BIS RapidStrut® Fixing Rail (pg)
213 BIS RapidStrut® Cantilever Arm 41x41D (BUP1000)
211 BIS RapidStrut® Cantilever Arm (BUP1000)

Alternative

231 BIS RapidStrut® Slide Nut G2 (BUP1000)
241 BIS RapidStrut® Slide Nut with Plastic Tabs (zp)

EN-SG 02/2022- Subject to modifications

BIS RapidStrut® Slide Nut with Adapter MS (ZP)

(H 24 12)



66513116



66513121

Features and Benefits

- slide nut with adapter, washer and metal spring
- to connect clamps with M16 or 1/2" nut to Strut rails
- ready-to-use pre-assembled for a quick fixing, and retains assembly in place before final tightening
- solid washer for strong connection
- robust since completely made from metal
- material: steel
- zinc plated

Part No.	G	L	L2 (mm)	B (mm)	B2 (mm)	H (mm)	h (mm)	s (mm)	s1 (mm)	T_{inst} (Nm)	For Rail	$F_{a,z}$ (N)	$F_{a,x}$ (N)	Pack 1
66513116	M16	43 mm	19 mm	43	34	47	30	4.0	8.0	40.0	Strut	5,000	2,790	25
66513121	½"	43 mm	19 mm	43	34	43	26	4.0	8.0	40.0	Strut	5,000	2,790	25

Tested values in combination with BIS RapidStrut® Rail 41x41x2.5mm.
More details can be found on the Technical Datasheet.

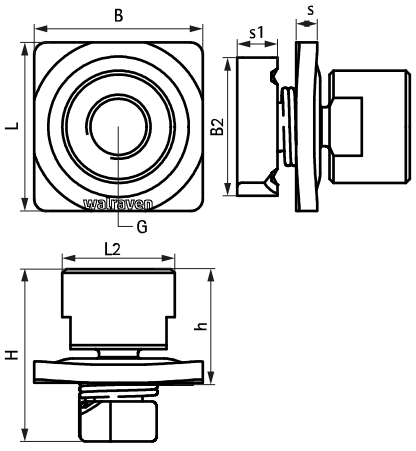

Complementary

206 BIS RapidStrut® Fixing Rail (pg)
211 BIS RapidStrut® Cantilever Arm (BUP1000)

Alternative

231 BIS RapidStrut® Slide Nut G2 (BUP1000)
241 BIS RapidStrut® Slide Nut with Plastic Tabs (zp)

EN-SG 02/2022- Subject to modifications

BIS Strut Slide Nut (BUP1000)

(H 24 15)

fixing to Strut rail



Features and Benefits

- for all types of Strut Rail
- for tight fixing of accessories (e.g. connectors) on rail
- material: steel 1.0332
- surface protection:
  - product is part of the BIS UltraProtect® 1000 system
  - suitable for in- and outdoor applications
  - stands min. 1,000 hours salt spray test (max. 5% red rust) according to ISO 9227
- tested for fire safety

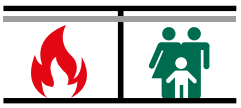

Part No.	G	s (mm)	$T_{(max.)}$ (Nm)	For Rail	$F_{a,z}$ (N)	$F_{a,x}$ (N)	Pack 1	Pack 2
65188006	M6	5.0	7.0	Strut	2,660	950	100	-
65188008	M8	6.0	25.0	Strut	4,500	2,200	100	1,000
65188010	M10	8.0	40.0	Strut	5,000	2,550	100	500
65188012	M12	9.0	40.0	Strut	5,000	2,950	100	500

M10 tested for fire safety.
M12 tested for fire safety.
Tested values in combination with BIS RapidStrut® Rail 41x41x2.5mm.
More details can be found on the Technical Datasheet.

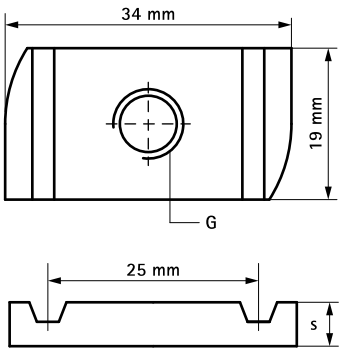

Complementary

211 BIS RapidStrut® Cantilever Arm (BUP1000)
205 BIS RapidStrut® Fixing Rail DS 5 (BUP1000)

Alternative

240 BIS RapidStrut® Slide Nut

EN-SG 02/2022- Subject to modifications

BIS Strut Slide Nut (zp)

(H 24 20)

fixing to Strut rail



Features and Benefits

- material: steel 1.0332
- zinc plated
- tested for fire safety

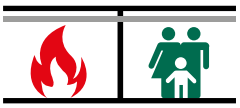

Part No.	G	L	s (mm)	$T_{(max.)}$ (Nm)	For Rail	$F_{a,z}$ (N)	$F_{a,x}$ (N)	Pack 1	Pack 2
6517006	M6	-	5.0	7.0	Strut	2,660	950	100	600
6517008	M8	-	6.0	25.0	Strut	4,500	2,200	100	500
6517010	M10	-	9.0	40.0	Strut	5,000	2,550	100	600
6517012	M12	-	9.0	50.0	Strut	5,000	2,950	100	500

M10 and above tested for fire safety.
Tested values in combination with BIS RapidStrut® Rail 41x41x2.5mm.
More details can be found on the Technical Datasheet.

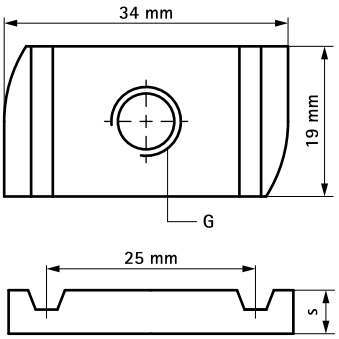

Complementary

206 BIS RapidStrut® Fixing Rail (pg)
211 BIS RapidStrut® Cantilever Arm (BUP1000)

Alternative

241 BIS RapidStrut® Slide Nut with Plastic Tabs (zp)
235 BIS Strut Slide Nut (BUP1000)

EN-SG 02/2022- Subject to modifications

BIS Strut Slide Nut (hdg)

(H 24 25)

fixing to Strut rail

A



B



C



Features and Benefits

- material: slide nut made of steel 1.0332; spring made of spring steel DIN17223 (class A)
- tested for fire safety
- hot dip galvanized

	Part No.	G	L	s (mm)	$T_{(max.)}$ (Nm)	For Rail	$F_{a,z}$ (N)	$F_{a,x}$ (N)	Pack 1
A	6518006	M6	-	5.0	7.0	Strut	2,660	950	100
A	6518008	M8	-	6.0	25.0	Strut	4,500	2,200	100
A	6518010	M10	-	8.0	40.0	Strut	5,000	2,550	100
A	6518012	M12	-	9.0	50.0	Strut	5,000	2,950	100
B	6518106	M6	13 mm	5.0	7.0	Strut 41x21	2,660	950	100
B	6518108	M8	13 mm	6.0	25.0	Strut 41x21	4,500	2,200	100
B	6518110	M10	13 mm	8.0	40.0	Strut 41x21	5,000	2,550	100
B	6518112	M12	13 mm	9.0	50.0	Strut 41x21	5,000	2,950	100
C	6518206	M6	33 mm	5.0	7.0	Strut 41x41	2,660	950	100
C	6518208	M8	33 mm	6.0	25.0	Strut 41x41	4,500	2,200	100
C	6518210	M10	33 mm	8.0	40.0	Strut 41x41	5,000	2,550	100
C	6518212	M12	33 mm	9.0	50.0	Strut 41x41	5,000	2,950	100

M10 and above tested for fire safety.
Tested values in combination with BIS RapidStrut® Rail 41x41x2.5mm.
More details can be found on the Technical Datasheet.

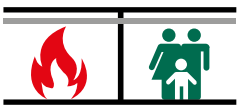

A

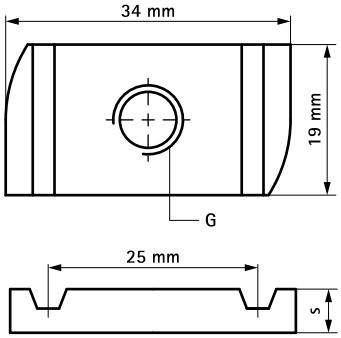

B

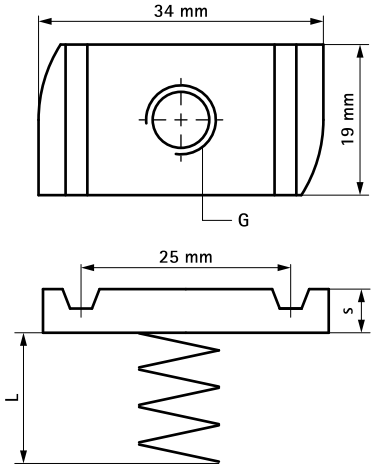

C

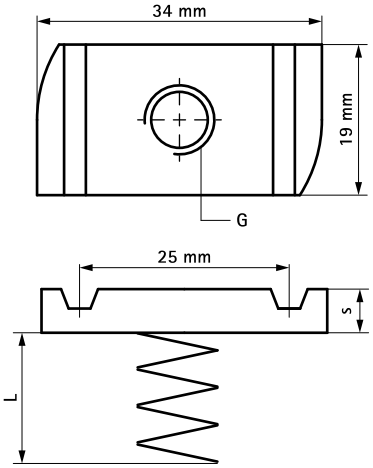

Alternative

235 BIS Strut Slide Nut (BUP1000)

BIS Strut Square Slide Nut (BUP1000)

(H 24 32)

fixing to Strut rail

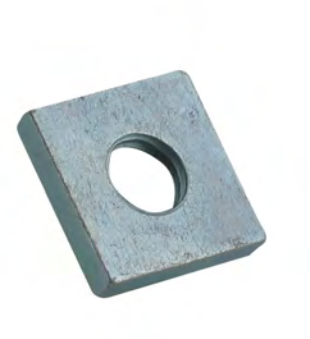

Features and Benefits

- material: steel 1.0332
- surface protection:
  - product is part of the BIS UltraProtect® 1000 system
  - suitable for in- and outdoor applications
  - stands min. 1,000 hours salt spray test (max. 5% red rust) according to ISO 9227

Part No.	G	For Rail	Pack 1
65178016	M16	Strut	250

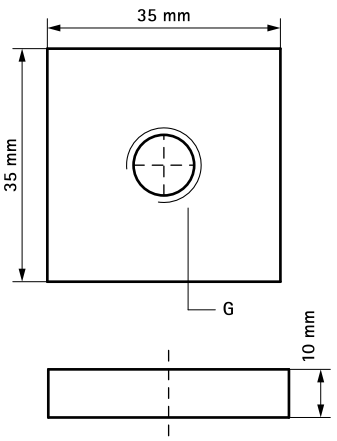

Complementary

205 BIS RapidStrut® Fixing Rail DS 5 (BUP1000)
211 BIS RapidStrut® Cantilever Arm (BUP1000)
26 BIS Heavy Duty Clamp HD1501 (BUP1000)

Complementary

46 BIS Heavy Duty Clamp HD500 (BUP1000)

Alternative

231 BIS RapidStrut® Slide Nut G2 (BUP1000)
240 BIS RapidStrut® Slide Nut
235 BIS Strut Slide Nut (BUP1000)

EN-SG 02/2022- Subject to modifications

BIS Strut Square Slide Nut

(H 24 30)

fixing to Strut rail



Features and Benefits

- material: steel 1.0332
- zinc plated
- tested for fire safety

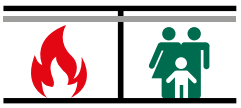

Part No.	G	For Rail	Pack 1	Pack 2
6517016	M16	Strut	50	250

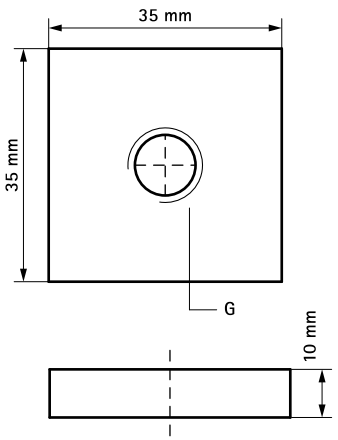

Complementary

205 BIS RapidStrut® Fixing Rail DS 5 (BUP1000)
211 BIS RapidStrut® Cantilever Arm (BUP1000)

Alternative

240 BIS RapidStrut® Slide Nut
235 BIS Strut Slide Nut (BUP1000)

EN-SG 02/2022- Subject to modifications

walraven

BIS RapidStrut® Slide Nut
with Plastic Tabs (BUP1000)

(H 24 35)

fixing to Strut rail



Features and Benefits

- slide nut with plastic 'tabs'
- for all types of Strut Rail
- for tight fixing of accessories (e.g. connectors) on rail
- with plastic tabs which simplifies inserting and positioning
- material: slide nut made of steel 1.0332; tabs made of PP (polypropylene), green
- surface protection:
  - product is part of the BIS UltraProtect® 1000 system
  - suitable for in- and outdoor applications
  - stands min. 1,000 hours salt spray test (max. 5% red rust) according to ISO 9227
- tested for fire safety

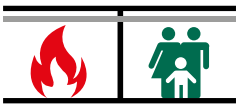

Part No.	G	s (mm)	$T_{(max.)}$ (Nm)	For Rail	$F_{a,z}$ (N)	$F_{a,x}$ (N)	Pack 1
651868006	M6	5.0	7.0	Strut	2,660	950	100
651868008	M8	6.0	25.0	Strut	4,500	2,200	100
651868010	M10	8.0	40.0	Strut	5,000	2,550	100
651868012	M12	9.0	50.0	Strut	5,000	2,950	100

M10 and above tested for fire safety.
Tested values in combination with BIS RapidStrut® Rail 41x41x2.5mm.
More details can be found on the Technical Datasheet.

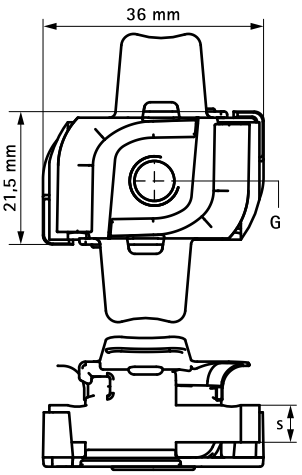

Complementary

205 BIS RapidStrut® Fixing Rail DS 5 (BUP1000)
211 BIS RapidStrut® Cantilever Arm (BUP1000)

Alternative

235 BIS Strut Slide Nut (BUP1000)

EN-SG 02/2022- Subject to modifications

BIS RapidStrut® Slide Nut with Plastic Tabs (zp)

(H 24 40)

fixing to Strut rail



Features and Benefits

- slide nut with plastic 'tabs'
- for all types of Strut Rail
- for tight fixing of accessories (e.g. connectors) on rail
- with plastic tabs which simplifies inserting and positioning
- material: slide nut made of steel 1.0332; tabs made of PP (polypropylene), green
- zinc plated
- tested for fire safety

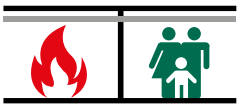

Part No.	G	s (mm)	$T_{(max.)}$ (Nm)	For Rail	$F_{a,z}$ (N)	$F_{a,x}$ (N)	Pack 1
6518606	M6	5.0	7.0	Strut	2,660	950	100
6518608	M8	6.0	25.0	Strut	4,500	2,200	100
6518610	M10	9.0	40.0	Strut	5,000	2,550	100
6518612	M12	9.0	50.0	Strut	5,000	2,950	100

M10 and above tested for fire safety.
Tested values in combination with BIS RapidStrut® Rail 41x41x2.5mm.
More details can be found on the Technical Datasheet.

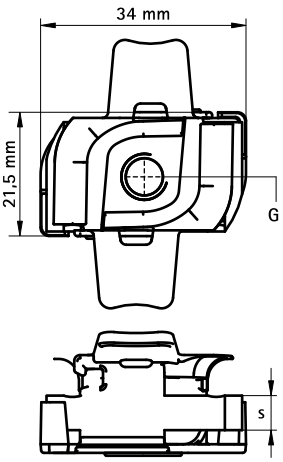

Complementary

205 BIS RapidStrut® Fixing Rail DS 5 (BUP1000)
211 BIS RapidStrut® Cantilever Arm (BUP1000)

Alternative

235 BIS Strut Slide Nut (BUP1000)

EN-SG 02/2022- Subject to modifications

BIS RapidStrut® Hammerfix G2 (BUP1000)

(H 24 49)

fixing to Strut rail



Features and Benefits

- slide nut with stud bolt, washer and BIS RapidStrut® spring
- ready-to-use pre-assembled for a quick fixing, and retains assembly in place before final tightening
- material: metal parts made of steel 1.0332; spring(s) made of POM (polyoxymethylene), green
- surface protection:
  - product is part of the BIS UltraProtect® 1000 system
  - suitable for in- and outdoor applications
  - stands min. 1,000 hours salt spray test (max. 5% red rust) according to ISO 9227

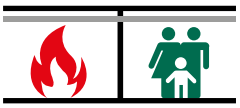

Part No.	G	L	LU (mm)	s (mm)	SW1 (mm)	$T_{(max.)}$ (Nm)	$F_{a,z}$ (N)	$F_{a,x}$ (N)	Pack 1	Pack 2
652785804	M8	40 mm	16	6.0	13	11.0	3,120	1,100	15	150
652785805	M8	50 mm	26	6.0	13	11.0	3,120	1,100	15	150
652785806	M8	60 mm	36	6.0	13	11.0	3,120	1,100	5	100
652785808	M8	80 mm	56	6.0	13	11.0	3,120	1,100	5	100
652785810	M8	100 mm	76	6.0	13	11.0	3,120	1,100	5	100
652785004	M10	40 mm	12	8.0	17	15.0	5,000	1,250	15	150
652785006	M10	60 mm	32	8.0	17	15.0	5,000	1,250	5	100
652785008	M10	80 mm	52	8.0	17	15.0	5,000	1,250	5	100
652785204	M12	40 mm	10	9.0	19	22.0	5,000	2,440	5	100
652785206	M12	60 mm	30	9.0	19	22.0	5,000	2,440	5	100

M10 tested for fire safety.
M12 tested for fire safety.
Tested values in combination with BIS RapidStrut® Rail 41x41x2.5mm.

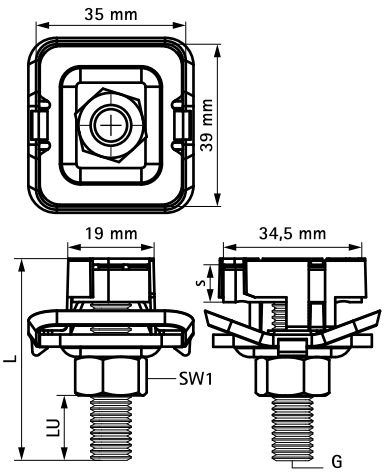

Complementary

205 BIS RapidStrut® Fixing Rail DS 5 (BUP1000)
211 BIS RapidStrut® Cantilever Arm (BUP1000)

EN-SG 02/2022- Subject to modifications

BIS RapidStrut® Hammerfix 'U' G2 (BUP1000)

(H 24 59)

fixing to Strut rail



Features and Benefits

- slide nut with stud bolt, U-shaped washer and BIS RapidStrut® spring
- U-shaped for extra stability
- ready-to-use pre-assembled for a quick fixing, and retains assembly in place before final tightening
- visual guide to check the position of the slide nut
- material: metal parts made of steel 1.0332; spring(s) made of POM (polyoxymethylene), green
- surface protection:
  - product is part of the BIS UltraProtect® 1000 system
  - suitable for in- and outdoor applications
  - stands min. 1,000 hours salt spray test (max. 5% red rust) according to ISO 9227

Part No.	SW1 (mm)	$T_{(max.)}$ (Nm)	For Rail	$F_{a,z}$ (N)	Pack 1
665285006	17	15.0	Strut	10,000	50

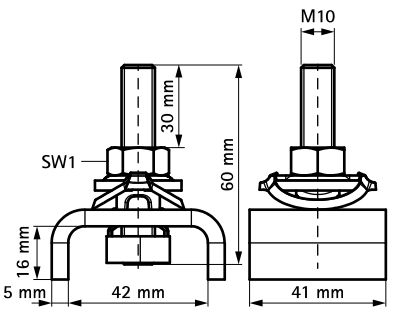

BIS Strut Tee-Bolt 'U' (BUP1000)

(H 24 62)

fixing to Strut rail



Features and Benefits

- slide nut with stud bolt and U-shaped washer
- U-shaped for extra stability
- ready-to-use pre-assembled
- material: steel 1.0332
- surface protection:
  - product is part of the BIS UltraProtect® 1000 system
  - suitable for in- and outdoor applications
  - stands min. 1,000 hours salt spray test (max. 5% red rust) according to ISO 9227
- tested for fire safety

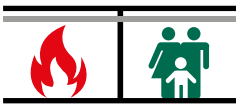

Part No.	G	L	LU (mm)	s (mm)	SW1 (mm)	For Rail	Pack 1
65278606	M16	60 mm	24	4.0	24	Strut	15

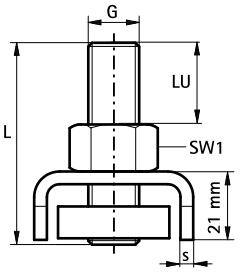

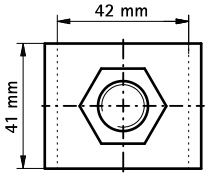

EN-SG 02/2022- Subject to modifications

BIS Strut Tee-Bolt Assembly

(H 24 70)

fixing to Strut rail



Features and Benefits

- slide nut with stud bolt and washer
- material: steel
- zinc plated

Part No.	G	L	LU (mm)	s (mm)	SW1 (mm)	$T_{(max.)}$ (Nm)	For Rail	Pack 1	Pack 2
6527934	M8	40 mm	18	6.0	13	15.0	Strut	25	125
6527935	M8	50 mm	28	6.0	13	15.0	Strut	25	250
6527944	M10	40 mm	14	8.0	17	15.0	Strut	25	250

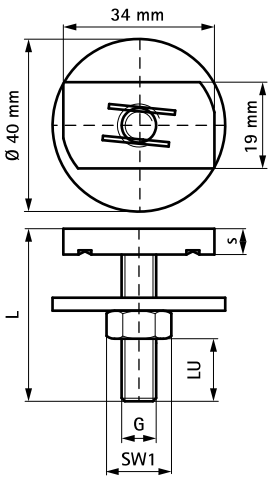

Complementary

211 BIS RapidStrut® Cantilever Arm (BUP1000)
205 BIS RapidStrut® Fixing Rail DS 5 (BUP1000)

EN-SG 02/2022- Subject to modifications

BIS RapidStrut® Ball Swivel Hanger

(H 24 75)

fixing to Strut rail



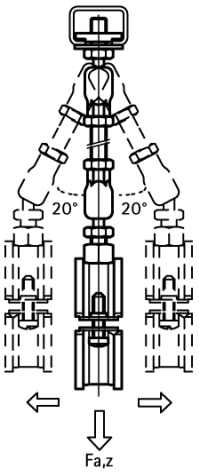

Features and Benefits

- slide nut with ball swivel hanger, washer and BIS RapidStrut® spring
- recommended for metal pipes up to DN 50, plastic pipes up to DN 100
- ready-to-use pre-assembled for a quick fixing, and retains assembly in place before final tightening
- with inspection hole to check screw-in depth (attention: when the threaded rod is screwed-in too deep, the ball swivel is blocked)
- screw-in depth is continuously variable (see LU)
- material: metal parts made of steel 1.0332; spring(s) made of POM (polyoxymethylene), green
- zinc plated

Part No.	G	L	LU (mm)	s (mm)	Lm1 (mm)	SW1 (mm)	SW2 (mm)	$T_{(max.)}$ (Nm)	For Rail	$F_{a,z}$ (N)	Pack 1
66530805	M8	80 mm	43	6.0	50	13	10	15.0	Strut	3,100	25
66530005	M10	80 mm	43	8.0	50	13	12	15.0	Strut	3,100	25

Please note. Always use 2 ball swivel hangers and secure by additional hexagon nut (see application picture). The maximum length change that can be dealt with, depends on the fixing distance (ceiling - pipe). The height difference that occurs as a result, needs to be taken into consideration. To be used in combination with BIS Ball Swivel Hangers. Product can be found on page E 10 05.

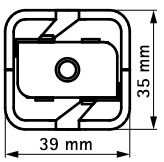

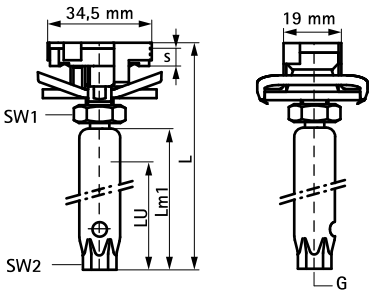

Complementary

211 BIS RapidStrut® Cantilever Arm (BUP1000)
205 BIS RapidStrut® Fixing Rail DS 5 (BUP1000)

EN-SG 02/2022- Subject to modifications

BIS Strut Washer - Flat (BUP1000)

(H 24 80)

to make Strut rail fabrications



Features and Benefits

- flat washer
- material: steel 1.0332
- surface protection:
  - product is part of the BIS UltraProtect® 1000 system
  - suitable for in- and outdoor applications
  - stands min. 1,000 hours salt spray test (max. 5% red rust) according to ISO 9227

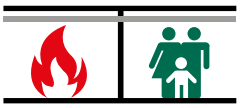

Part No.	B (mm)	d1 (mm)	For Rail	Pack 1	Pack 2
65381508	40	Ø 8.4	Strut	50	250
65381510	40	Ø 10.5	Strut	50	250
65381512	40	Ø 13.0	Strut	50	250

Ø 10.5 and above tested for fire safety.
Also available in stainless steel 1.4401 (AISI 316).

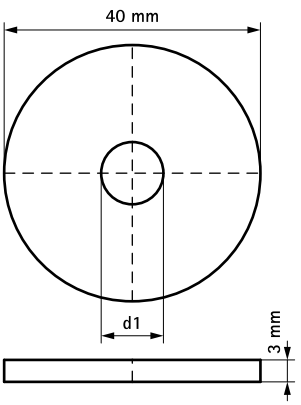

Complementary

211 BIS RapidStrut® Cantilever Arm (BUP1000)
205 BIS RapidStrut® Fixing Rail DS 5 (BUP1000)

EN-SG 02/2022- Subject to modifications

BIS Strut Washer - Flat (zp)

(H 24 85)

fixing to Strut rail



Features and Benefits

- flat washer
- material: steel 1.0332
- zinc plated
- tested for fire safety

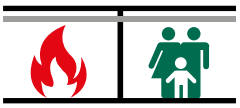

Part No.	B (mm)	d1 (mm)	For Rail	Pack 1	Pack 2
6533506	40	Ø 6.4	Strut	50	250
6533508	40	Ø 8.4	Strut	50	250
6533510	40	Ø 10.5	Strut	50	250
6533512	40	Ø 13.0	Strut	50	250
Ø 10.5 and above tested for fire safety.					

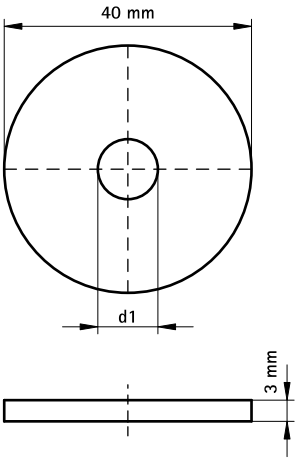

Complementary

211 BIS RapidStrut® Cantilever Arm (BUP1000)
205 BIS RapidStrut® Fixing Rail DS 5 (BUP1000)

Alternative

247 BIS Strut Washer - Flat (BUP1000)
249 BIS Strut Washer - U-shaped (BUP1000)

EN-SG 02/2022- Subject to modifications

BIS Strut Washer – U-shaped (BUP1000)

(H 24 92)

to make Strut rail fabrications



Features and Benefits

- U-shaped washer
- U-shaped for extra stability
- material: steel 1.0332
- surface protection:
  - product is part of the BIS UltraProtect® 1000 system
  - suitable for in- and outdoor applications
  - stands min. 1,000 hours salt spray test (max. 5% red rust) according to ISO 9227
- tested for fire safety

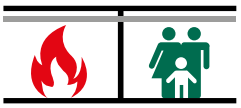

Part No.	d1 (mm)	For Rail	Pack 1
66588009	Ø 9.0	Strut	50
66588010	Ø 11.0	Strut	50
66588012	Ø 13.0	Strut	50
66588016	Ø 17.0	Strut	50
Ø 11.0 and above tested for fire safety.			

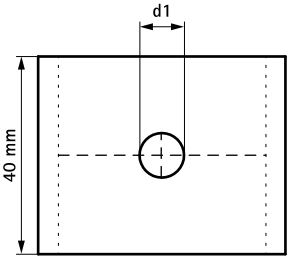

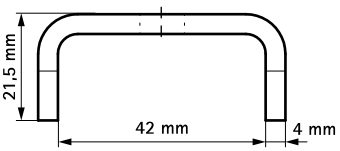

Complementary

211 BIS RapidStrut® Cantilever Arm (BUP1000)
205 BIS RapidStrut® Fixing Rail DS 5 (BUP1000)

EN-SG 02/2022- Subject to modifications

BIS RapidStrut® Rail Connector 90° G2 (BUP1000)

(H 28 04)

to make Strut rail fabrications



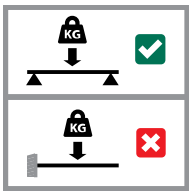

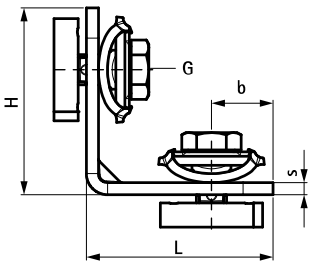

665885102
665885202

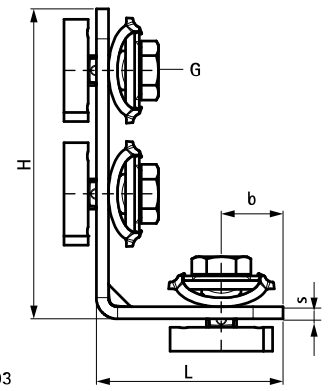

665885203

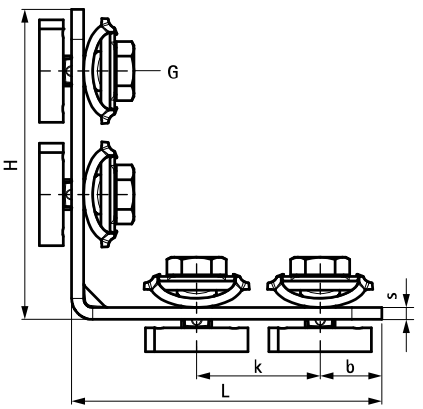

665885205

Features and Benefits

- connector with pre-assembled BIS RapidStrut® Slide nut(s)
- to make fabrication with Strut Rail
- ready-to-use pre-assembled for a quick fixing, and retains assembly in place before final tightening
- 'Direct Twist' technology for easy and secure installation
- visual guide to check the position of the slide nut
- Part No. 66588520X: optimized for easy installation with electrical tools
- material: metal parts made of steel 1.0332; spring(s) made of POM (polyoxymethylene), green
- surface protection:
  - product is part of the BIS UltraProtect® 1000 system
  - suitable for in- and outdoor applications
  - stands min. 1,000 hours salt spray test (max. 5% red rust) according to ISO 9227

Part No.	Model	Type	Thread (M)	L	H (mm)	b (mm)	s (mm)	k (mm)	a (°)	$T_{(max.)}$ (Nm)	For Rail	Pack 1
665885102	Short / short	2 sides pre-assembled	M10	42 mm	62	20.5	4	-	90°	40.0	Strut	50
665885202	Short / short	2 sides pre-assembled	M10	62 mm	62	20.5	4	-	90°	40.0	Strut	50
665885203	Short / long	2 sides pre-assembled	M10	62 mm	103	20.5	4	-	90°	40.0	Strut	25

Complementary

205 BIS RapidStrut® Fixing Rail DS 5 (BUP1000)

EN-SG 02/2022- Subject to modifications

BIS Strut Connector 90° (BUP1000)

(H 28 13)



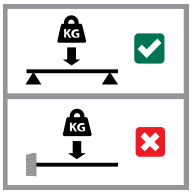

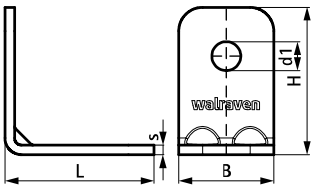

66588201

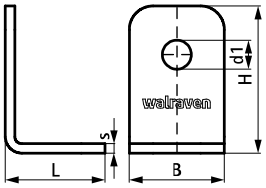

66588207

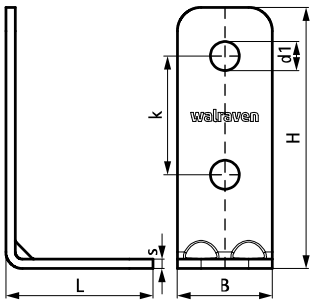

66588221

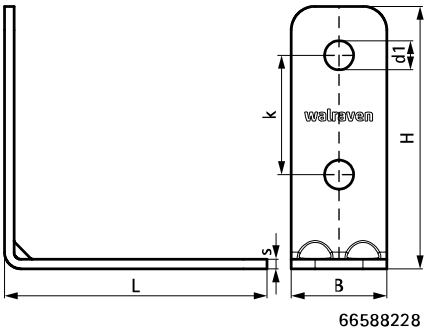

66588228

Features and Benefits

- angle connector for all Strut rails to make fabrications
- the hole pattern is adapted to the hole pattern of Strut rails to use throughbolts
- user friendly by rounded edges
- with reinforced bend for extra strength
- material: steel 1.0242 (S250GD) + ZM310 MAC
- surface protection:
  - product is part of the BIS UltraProtect® 1000 system
  - suitable for in- and outdoor applications
  - stands min. 1,000 hours salt spray test (max. 5% red rust) according to ISO 9227

Part No.	Model	L	B (mm)	H (mm)	s (mm)	d1 (mm)	k (mm)	a (°)	Pack 1
66588207	Short / short	42 mm	40	62	4.0	Ø 12.2	-	90	50
66588221	Short / long	62 mm	40	110	4.0	Ø 12.2	50	90	25
66588228	Long / long	110 mm	40	110	4.0	Ø 12.2	50	90	25
66588201	Short / short	62 mm	40	62	4.0	Ø 12.2	-	90	50

Complementary

240 BIS RapidStrut® Slide Nut
168 BIS Washer (Flat) (BUP1000)
308 BIS Yeti® 130 Support System

Alternative

250 BIS RapidStrut® Rail Connector 90° G2 (BUP1000)
252 BIS Strut Connector 90° / 2D (BUP1000)
253 BIS Strut Connector 90° Rigid (BUP1000)

BIS Strut Connector 90° / 2D (BUP1000)

(H 28 23)

to make Strut rail fabrications



6659 8 914



6659 8 918

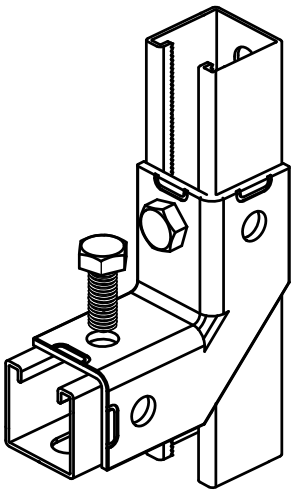

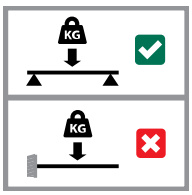

Features and Benefits

- flexible connector allows different rail positioning
- strong connection by surrounding the rail
- material: steel 1.0332
- surface protection:
  - product is part of the BIS UltraProtect® 1000 system
  - suitable for in- and outdoor applications
  - stands min. 1,000 hours salt spray test (max. 5% red rust) according to ISO 9227

Part No.	d (mm)	Model	L	B (mm)	B2 (mm)	H (mm)	s (mm)	k (mm)	a (°)	For Rail	Pack 1
66598914	13 mm	2+2 / 90	105 mm	105	45	45	4.0	-	90	Strut	10
66598918	13 mm	4+4 / 90	154 mm	154	45	45	4.0	49	90	Strut	10

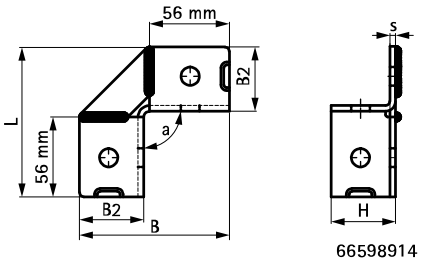

66598914

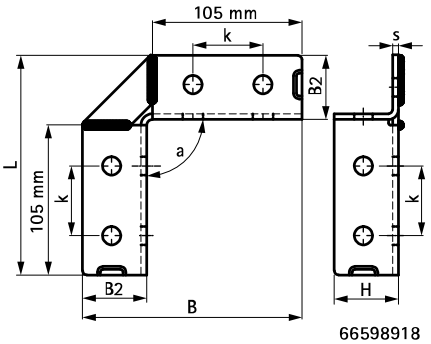

66598918

Complementary

207 BIS RapidStrut® Fixing Rail (BUP1000)
205 BIS RapidStrut® Fixing Rail DS 5 (BUP1000)
211 BIS RapidStrut® Cantilever Arm (BUP1000)

Alternative

250 BIS RapidStrut® Rail Connector 90° G2 (BUP1000)
253 BIS Strut Connector 90° Rigid (BUP1000)

EN-SG 02/2022- Subject to modifications

BIS Strut Connector 90° Rigid (BUP1000)

(H 28 25)

to make Strut rail fabrications



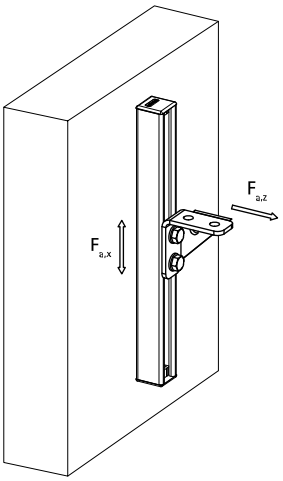

Features and Benefits

- reinforced connector to make rigid fabrications with Strut rails
- easy fitting due to rounded edges
- material: steel 1.0332
- surface protection:
  - product is part of the BIS UltraProtect® 1000 system
  - suitable for in- and outdoor applications
  - stands min. 1,000 hours salt spray test (max. 5% red rust) according to ISO 9227

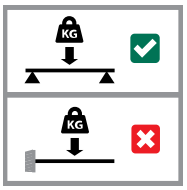

Part No.	L	B (mm)	H (mm)	s (mm)	d1 (mm)	k (mm)	a (°)	For Rail	$F_{a,z}$ (N)	$F_{a,z\ 2}$ (N)	$F_{a,x}$ (N)	$F_{a,x\ 2}$ (N)	Pack 1
66588291	91 mm	40	91	6	Ø 13	42	90°	Strut	4,000	8,000	3,000	7,000	25

$F_{a,z}$: max. allowed load acc. RAL GZ-655D (with rail 41x41x1.5).
$F_{a,z2}$: max. allowed load (with rail 41x41x2.5).
$F_{a,x}$: max. allowed load acc. RAL GZ-655D (with rail 41x41x1.5 and bolted 2 x M12 - 30Nm).
$F_{a,x2}$: max. allowed load (with rail 41x41x2.5 and bolted 2 x M12 - 60Nm).

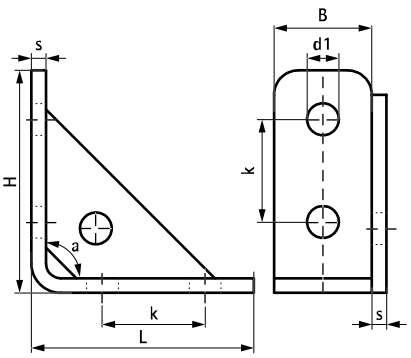

Complementary

206 BIS RapidStrut® Fixing Rail (pg)

BIS Strut Connector, Hinged (BUP1000)

(H 28 40)

to make Strut rail fabrications



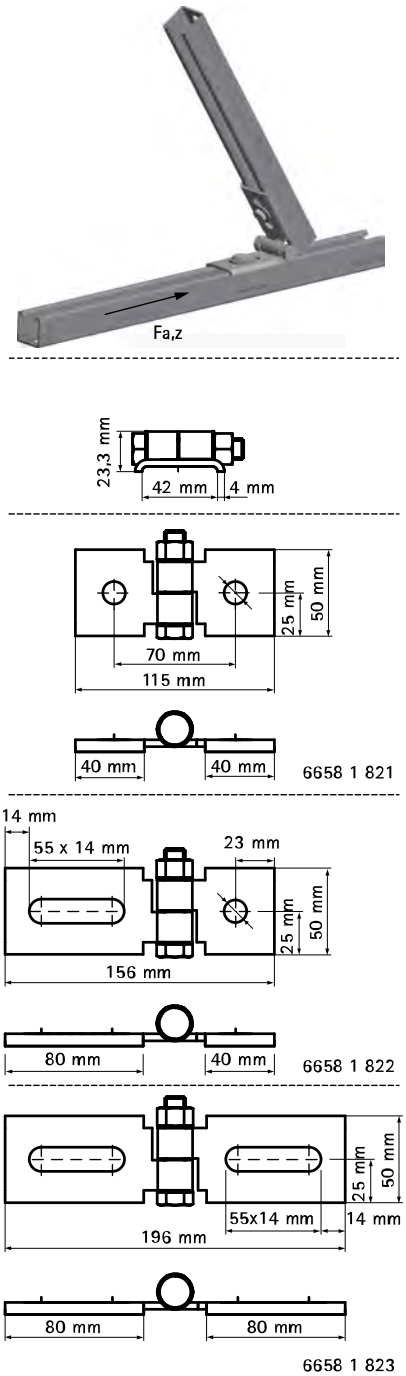

Features and Benefits

- to make fabrication with Strut Rail
- fully adjustable
- material: steel 1.0332
- surface protection:
  - product is part of the BIS UltraProtect® 1000 system
  - suitable for in- and outdoor applications
  - stands min. 1,000 hours salt spray test (max. 5% red rust) according to ISO 9227

Part No.	Model	For Rail	$F_{a,z}$ (N)	Pack 1
66581821	Short / short	Strut	1,000	20
66581822	Short / long	Strut	1,000	20
66581823	Long / long	Strut	1,000	20

EN-SG 02/2022- Subject to modifications

BIS RapidStrut® Rail Connector 135° G2 (BUP1000)

(H 28 54)

to make Strut rail fabrications





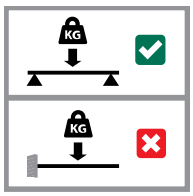

Features and Benefits

- connector with pre-assembled BIS RapidStrut® Slide nut(s)
- to make fabrication with Strut Rail
- ready-to-use pre-assembled for a quick fixing, and retains assembly in place before final tightening
- 'Direct Twist' technology for easy and secure installation
- visual guide to check the position of the slide nut
- optimized for easy installation with electrical tools
- material: metal parts made of steel 1.0332; spring(s) made of POM (polyoxymethylene), green
- surface protection:
  - product is part of the BIS UltraProtect® 1000 system
  - suitable for in- and outdoor applications
  - stands min. 1,000 hours salt spray test (max. 5% red rust) according to ISO 9227

Part No.	Model	Type	a (°)	$T_{(max.)}$ (Nm)	For Rail	Pack 1
665885235	Long / long	2 sides pre-assembled	135°	40.0	Strut	20
665885330	Short / long	1 side pre-assembled	135°	40.0	Strut	25

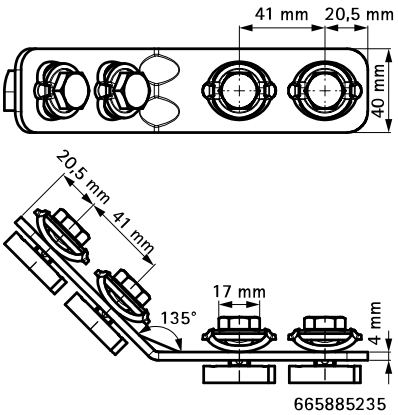

665885235

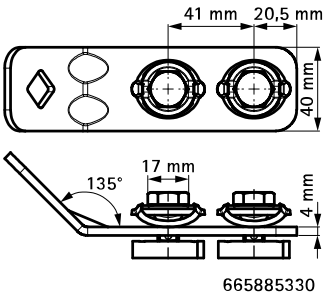

665885330

Complementary

205 BIS RapidStrut® Fixing Rail DS 5 (BUP1000)

BIS Strut Angle Connector 135° (BUP1000)

(H 28 63)



Features and Benefits

- angle connector for all Strut rails to make fabrications
- the hole pattern is adapted to the hole pattern of Strut rails to use throughbolts
- user friendly by rounded edges
- with reinforced bend for extra strength
- material: steel 1.0242 (S250GD) + ZM310 MAC
- surface protection:
  - product is part of the BIS UltraProtect® 1000 system
  - suitable for in- and outdoor applications
  - stands min. 1,000 hours salt spray test (max. 5% red rust) according to ISO 9227

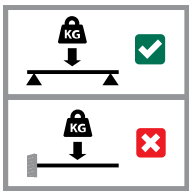

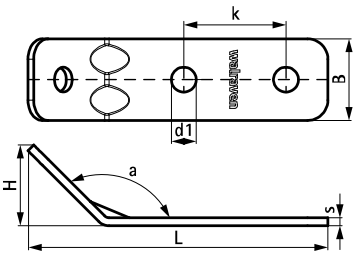

66588242

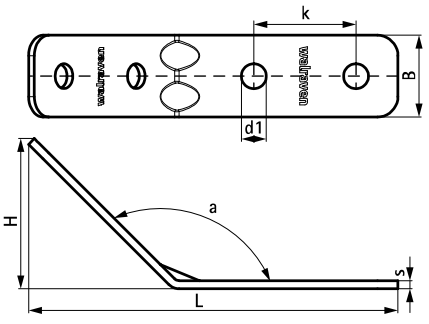

66588256

Part No.	Model	L	B (mm)	H (mm)	s (mm)	d1 (mm)	k (mm)	a (°)	Pack 1
66588242	Short / long	147 mm	40	39	4.0	Ø 12.2	50	135	25
66588256	Long / long	180 mm	40	80	4.0	Ø 12.2	50	135	25

Complementary

205 BIS RapidStrut® Fixing Rail DS 5 (BUP1000)
207 BIS RapidStrut® Fixing Rail (BUP1000)
240 BIS RapidStrut® Slide Nut

Complementary

235 BIS Strut Slide Nut (BUP1000)
247 BIS Strut Washer - Flat (BUP1000)

EN-SG 02/2022- Subject to modifications

BIS Strut Angle Connector 45° (BUP1000)

(H 28 68)



Features and Benefits

- angle connector for all Strut rails to make fabrications
- the hole pattern is adapted to the hole pattern of Strut rails to use throughbolts
- user friendly by rounded edges
- with reinforced bend for extra strength
- material: steel 1.0242 (S250GD) + ZM310 MAC
- surface protection:
  - product is part of the BIS UltraProtect® 1000 system
  - suitable for in- and outdoor applications
  - stands min. 1,000 hours salt spray test (max. 5% red rust) according to ISO 9227

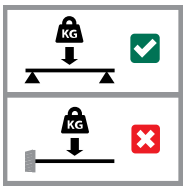

Part No.	Model	L	B (mm)	H (mm)	s (mm)	d1 (mm)	k (mm)	a (°)	Pack 1
66588270	Short / long	110 mm	40	61	4.0	Ø 12.2	50	45	25

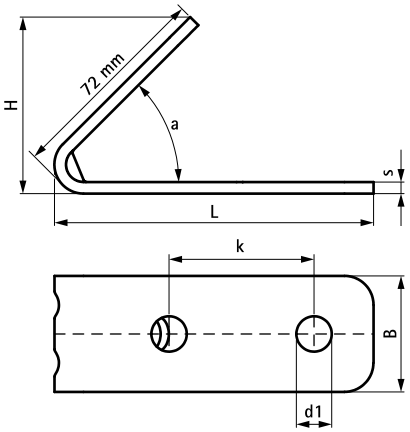

Complementary

205 BIS RapidStrut® Fixing Rail DS 5 (BUP1000)
207 BIS RapidStrut® Fixing Rail (BUP1000)
240 BIS RapidStrut® Slide Nut

Complementary

235 BIS Strut Slide Nut (BUP1000)
247 BIS Strut Washer - Flat (BUP1000)

EN-SG 02/2022- Subject to modifications

BIS RapidStrut® Rail Connector G2 (BUP1000)

(H 28 74)

to make Strut rail fabrications

A



B



Features and Benefits

- connector with pre-assembled BIS RapidStrut® Slide nut(s)
- to make fabrication with Strut Rail
- ready-to-use pre-assembled for a quick fixing, and retains assembly in place before final tightening
- 'Direct Twist' technology for easy and secure installation
- visual guide to check the position of the slide nut
- optimized for easy installation with electrical tools
- material: metal parts made of steel 1.0332; spring(s) made of POM (polyoxymethylene), green
- surface protection:
  - product is part of the BIS UltraProtect® 1000 system
  - suitable for in- and outdoor applications
  - stands min. 1,000 hours salt spray test (max. 5% red rust) according to ISO 9227



	Part No.	Type	L	$T_{(max.)}$ (Nm)	For Rail	Pack 1
A	665885184	2 x M10	82 mm	40.0	Strut	50
B	665885186	4 x M10	164 mm	40.0	Strut	25

A

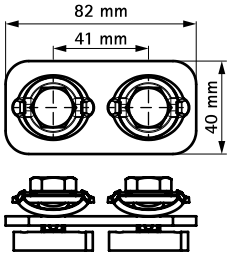

B

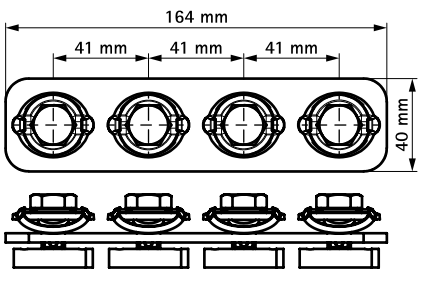

Complementary

205 BIS RapidStrut® Fixing Rail DS 5 (BUP1000)

Alternative

260 BIS RapidStrut® Rail Connector -

EN-SG 02/2022- Subject to modifications

BIS Rectangular Connector

(H 28 85)

to make Strut rail fabrications



Features and Benefits

- flat connector
- to make fabrication with Strut Rail
- material: steel 1.0332
- hot dip galvanized

Part No.	Model	L	For Rail	Pack 1
66580312	3 holes	123 mm	Strut	50

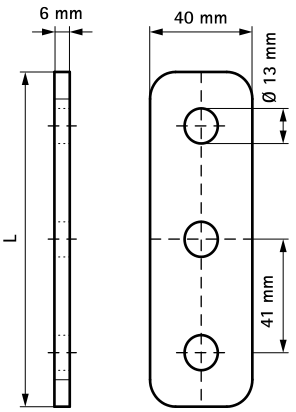

BIS RapidStrut® Rail Connector – U-shaped G2 (BUP1000)

(H 28 89)

to make Strut rail fabrications





Features and Benefits

- connector with pre-assembled BIS RapidStrut® Slide nut(s)
- to make fabrication with Strut Rail
- ready-to-use pre-assembled for a quick fixing, and retains assembly in place before final tightening
- material: metal parts made of steel 1.0332; spring(s) made of POM (polyoxymethylene), green
- surface protection:
  - product is part of the BIS UltraProtect® 1000 system
  - suitable for in- and outdoor applications
  - stands min. 1,000 hours salt spray test (max. 5% red rust) according to ISO 9227

Part No.	$T_{(max.)}$ (Nm)	For Rail	Pack 1
665885421	40.0	Strut	20

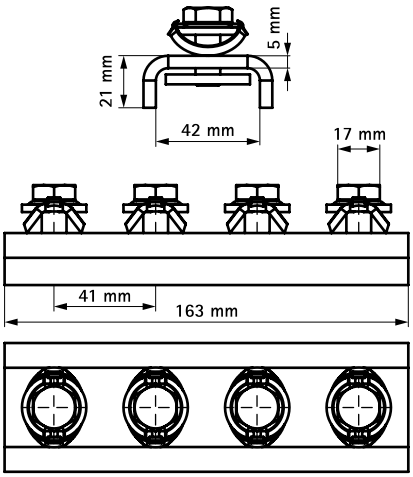

Complementary

205 BIS RapidStrut® Fixing Rail DS 5 (BUP1000)

Alternative

258 BIS RapidStrut® Rail Connector G2 (BUP1000)

EN-SG 02/2022- Subject to modifications

BIS Strut U-Connector linear (BUP1000)

(H 28 103)



Features and Benefits

- U-shaped for extra stability
- longitudinal connector for all Strut rails
- for strong connections and in combination with Double Strut rails it is advised to use linear connectors on both sides of the rail
- the hole pattern is adapted to the hole pattern of Strut rails to use throughbolts
- material: steel 1.0242 (S250GD) + ZM310 MAC
- surface protection:
  - product is part of the BIS UltraProtect® 1000 system
  - suitable for in- and outdoor applications
  - stands min. 1,000 hours salt spray test (max. 5% red rust) according to ISO 9227

Part No.	L	B (mm)	H (mm)	s (mm)	d1 (mm)	S (mm)	k (mm)	For Rail	Pack 1
66588121	175 mm	50	21.5	4.0	Ø 12.2	42	45	Strut 41x21 + 41x21D	20
66588141	175 mm	50	41.5	4.0	Ø 12.2	42	45	Strut 41x41 + 41x41D + 41x62 + 41x62D + 41x82	10

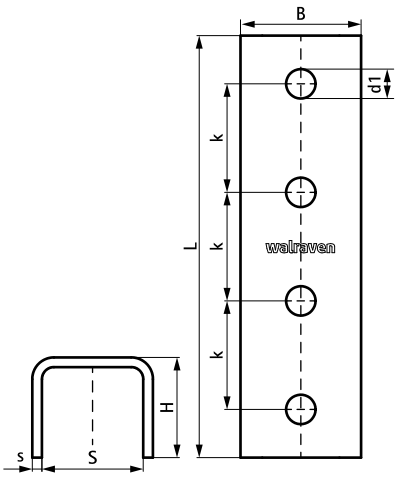

EN-SG 02/2022- Subject to modifications

Complementary

205 BIS RapidStrut® Fixing Rail DS 5 (BUP1000)
207 BIS RapidStrut® Fixing Rail (BUP1000)
235 BIS Strut Slide Nut (BUP1000)

Complementary

240 BIS RapidStrut® Slide Nut
168 BIS Washer (Flat) (BUP1000)

Alternative

260 BIS RapidStrut® Rail Connector -

BIS RapidStrut® Rail
T- and X-Connector G2 (BUP1000)

(H 28 109)

to make Strut rail fabrications



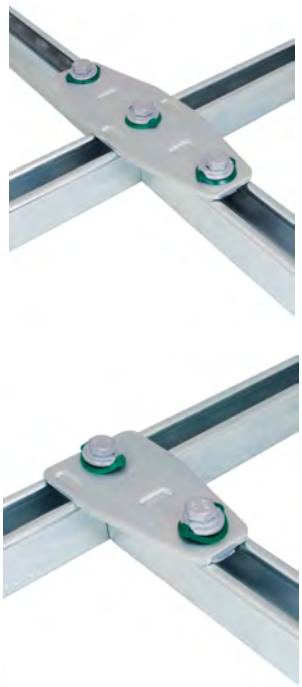

Features and Benefits

- connector with pre-assembled BIS RapidStrut® Slide nut(s)
- to make fabrication with Strut Rail
- ready-to-use pre-assembled for a quick fixing, and retains assembly in place before final tightening
- 'Direct Twist' technology for easy and secure installation
- visual guide to check the position of the slide nut
- optimized for easy installation with electrical tools
- material: metal parts made of steel 1.0332; spring(s) made of POM (polyoxymethylene), green
- surface protection:
  - product is part of the BIS UltraProtect® 1000 system
  - suitable for in- and outdoor applications
  - stands min. 1,000 hours salt spray test (max. 5% red rust) according to ISO 9227

Part No.	Type	$T_{(max.)}$ (Nm)	For Rail	Pack 1
665885213	T	40.0	Strut	20
665885223	X	40.0	Strut	15

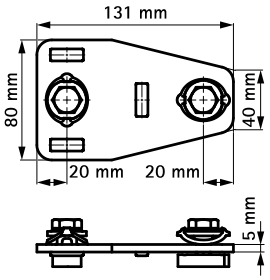

6658 8 5213

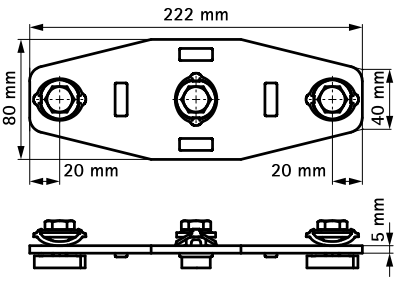

6658 8 5223

Complementary

205 BIS RapidStrut® Fixing Rail DS 5 (BUP1000)

EN-SG 02/2022- Subject to modifications

BIS Strut T-Connector (BUP1000)

(H 28 118)



Features and Benefits

- T-connector for Strut rails
- extra safety by locking notches to prevent turning
- material: steel 1.0242 (S250GD) + ZM310 MAC
- surface protection:
  - product is part of the BIS UltraProtect® 1000 system
  - suitable for in- and outdoor applications
  - stands min. 1,000 hours salt spray test (max. 5% red rust) according to ISO 9227

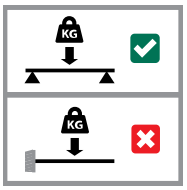

Part No.	L	B (mm)	H (mm)	s (mm)	d1 (mm)	k (mm)	For Rail	Pack 1
66588301	131 mm	80	6.5	4.0	Ø 12.2	41	Strut	25

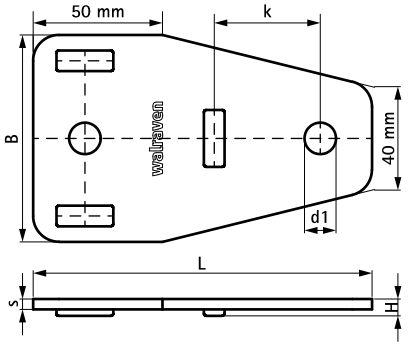

Complementary

205 BIS RapidStrut® Fixing Rail DS 5 (BUP1000)
207 BIS RapidStrut® Fixing Rail (BUP1000)
235 BIS Strut Slide Nut (BUP1000)

Complementary

240 BIS RapidStrut® Slide Nut
168 BIS Washer (Flat) (BUP1000)

Alternative

262 BIS RapidStrut® Rail

EN-SG 02/2022- Subject to modifications

BIS Strut Z-Bracket (BUP1000)

(H 28 128)



Features and Benefits

- to connect Strut rails to wall or ceiling
- connector to make Z-connections between Strut rails
- user friendly by rounded edges
- material: steel 1.0242 (S250GD) + ZM310 MAC
- surface protection:
  - product is part of the BIS UltraProtect® 1000 system
  - suitable for in- and outdoor applications
  - stands min. 1,000 hours salt spray test (max. 5% red rust) according to ISO 9227

Part No.	L	B (mm)	H (mm)	s (mm)	d1 (mm)	For Rail	Pack 1
66588502	86 mm	40	25.5	4.0	Ø 12.2	Strut 41x21	50
66588504	86 mm	40	45	4.0	Ø 12.2	Strut 41x41 + 41x21D	50

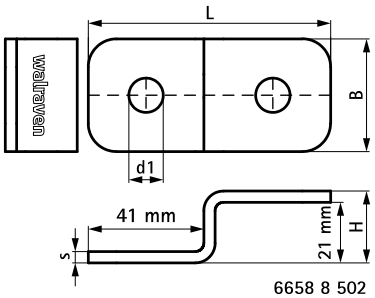

6658 8 502

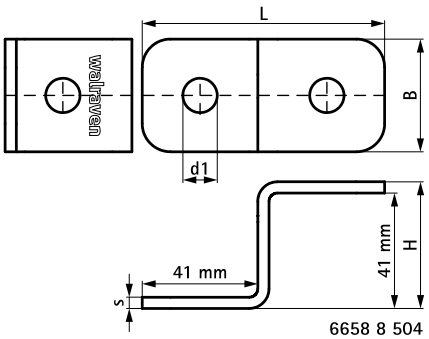

6658 8 504

Complementary

207 BIS RapidStrut® Fixing Rail (BUP1000)
205 BIS RapidStrut® Fixing Rail DS 5 (BUP1000)
235 BIS Strut Slide Nut (BUP1000)

Complementary

240 BIS RapidStrut® Slide Nut
168 BIS Washer (Flat) (BUP1000)

Alternative

265 BIS RapidStrut® Cross Connector G2 (BUP1000)

EN-SG 02/2022- Subject to modifications

BIS RapidStrut® Cross Connector G2 (BUP1000)

(H 28 134)

to make Strut rail fabrications





Features and Benefits

- connector with pre-assembled BIS RapidStrut® Slide nut(s)
- to make fabrication with Strut Rail
- ready-to-use pre-assembled for a quick fixing, and retains assembly in place before final tightening
- 'Direct Twist' technology for easy and secure installation
- visual guide to check the position of the slide nut
- optimized for easy installation with electrical tools
- material: metal parts made of steel 1.0332; spring(s) made of POM (polyoxymethylene), green
- surface protection:
  - product is part of the BIS UltraProtect® 1000 system
  - suitable for in- and outdoor applications
  - stands min. 1,000 hours salt spray test (max. 5% red rust) according to ISO 9227

Part No.	h (mm)	$T_{(max.)}$ (Nm)	For Rail	Pack 1
665885402	20	40.0	Strut 41x21	25
665885404	40	40.0	Strut 41x41	25
665885405	50	40.0	Strut 41x51 (BIS RapidStrut® DS 5)	25
665885406	60	40.0	Strut 41x62	15
665885408	80	40.0	Strut 41x82	10

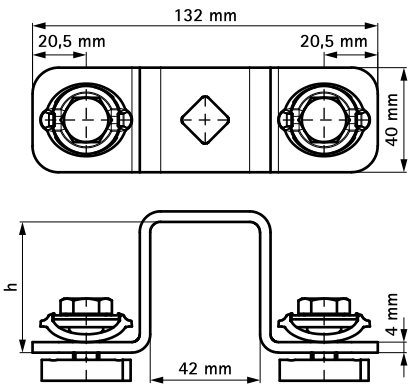

Complementary

205 BIS RapidStrut® Fixing Rail DS 5 (BUP1000)

BIS Strut Cross Connector (BUP1000)

(H 28 143)

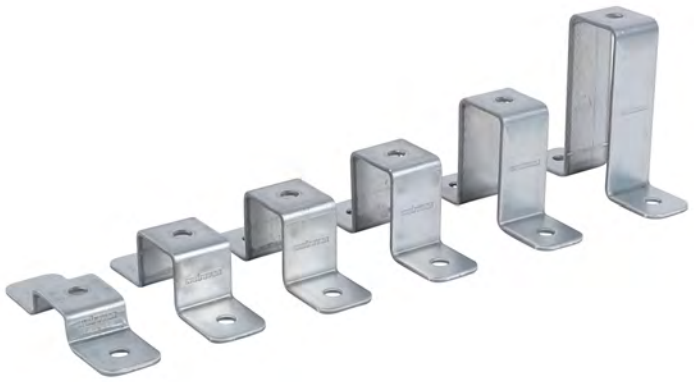

Features and Benefits

- connector to make cross connections between Strut rails
- to connect Strut rails to wall or ceiling
- the hole pattern is adapted to the hole pattern of Strut rails to use throughbolts
- user friendly by rounded edges
- material: steel 1.0242 (S250GD) + ZM310 MAC
- surface protection:
  - product is part of the BIS UltraProtect® 1000 system
  - suitable for in- and outdoor applications
  - stands min. 1,000 hours salt spray test (max. 5% red rust) according to ISO 9227

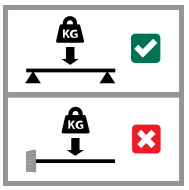

Part No.	L	B (mm)	H (mm)	s (mm)	d1 (mm)	S (mm)	k (mm)	For Rail	Pack 1
66588292	141	40	24	4.0	12.2	42	100	Strut 41x21	25
66588294	141	40	44	4.0	12.2	42	100	Strut 41x41	25
66588295	141	40	54	4.0	12.2	42	100	Strut 41x51 (BIS RapidStrut® DS 5)	25
66588296	141	40	64	4.0	12.2	42	100	Strut 41x62	20
66588298	141	40	84	4.0	12.2	42	100	Strut 41x82	10
66588299	141	40	126	4.0	12.2	42	100	Strut 41x124	10

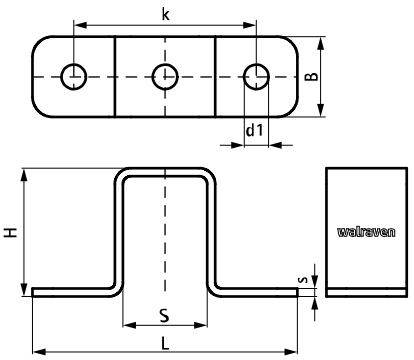

Complementary

205 BIS RapidStrut® Fixing Rail DS 5 (BUP1000)
207 BIS RapidStrut® Fixing Rail (BUP1000)
235 BIS Strut Slide Nut (BUP1000)

Complementary

240 BIS RapidStrut® Slide Nut
168 BIS Washer (Flat) (BUP1000)

EN-SG 02/2022- Subject to modifications

BIS PushStrut Button

(H 29 05)

for easy installation of complex rail constructions



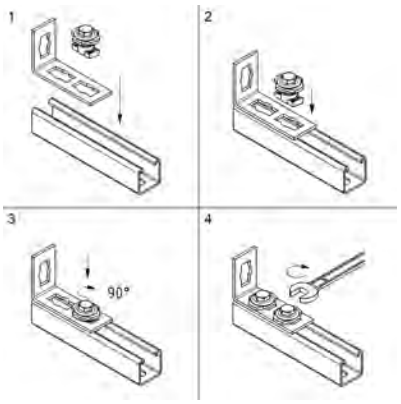

Features and Benefits

- universal button: easily combined with all common Strut profiles and all BIS PushStrut Connectors
- teeth with force fit connections offer more stability
- timesaving and flexible
- easy to remove and reusable
- 3D constructions due to 3D Connectors
- material: steel
- zinc plated

Part No.	L	B (mm)	h (mm)	s (mm)	s1 (mm)	SW1 (mm)	$F_{a,z}$ (N)	$F_{a,x}$ (N)	Pack 1
66519910	36 mm	40	15	4.0	8.0	17	5,000	3,000	50

The max. allowed load ($F_{a,z}$) in the table refers to rails and cantilever arms with a material thickness of 2.5 mm. The $F_{a,z}$ at a thickness of 2.0 mm profile thickness = 4,500 N. The $F_{a,z}$ at a thickness of 1.5 mm profile thickness = 3,500 N.

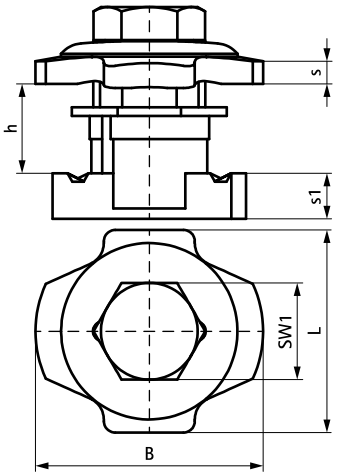

Complementary

206 BIS RapidStrut® Fixing Rail (pg)
269 BIS PushStrut Connector Flat
270 BIS PushStrut Construction Bracket Q (zp)

Complementary

271 BIS PushStrut Connector 90°
272 BIS PushStrut T-Connector
274 BIS PushStrut 3D Connector

EN-SG 02/2022- Subject to modifications

BIS PushStrut Washer

(H 29 08)

special washer for PushStrut accessories to install direct on building structure



Features and Benefits

- adapts the special hole into a standard hole
- material: steel
- zinc plated

Part No.	L	B (mm)	B2 (mm)	s (mm)	d1 (mm)	Pack 1
6594000	37 mm	28	17	4.0	10.5	1

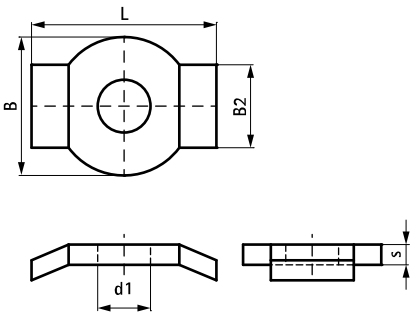

EN-SG 02/2022- Subject to modifications

BIS PushStrut Connector Flat

(H 29 10)

for easy installation of complex rail constructions

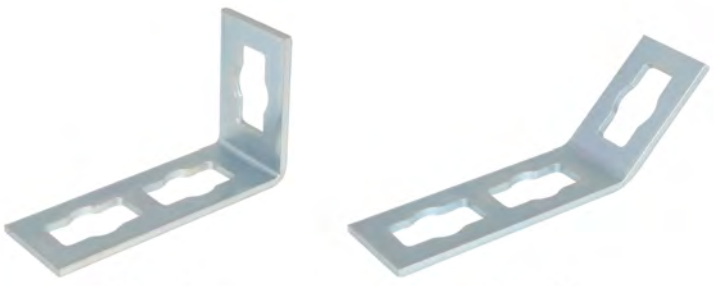

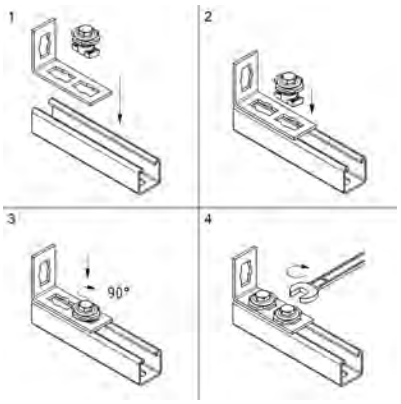

Features and Benefits

- easily combined with all common Strut profiles
- quick and easy to install
- closure button allows a force fit connection
- timesaving and flexible
- easy to remove and reusable
- 3D constructions due to 3D Connectors
- material: steel
- zinc plated

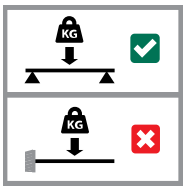

Part No.	L	B (mm)	H (mm)	s (mm)	d1 (mm)	k (mm)	a (°)	Pack 1
6594001	110 mm	40	64	4.0	21	46	90°	25
6594005	150 mm	40	46	4.0	21	46	135°	25

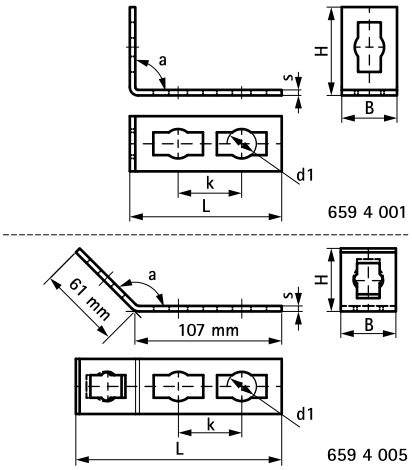

Complementary

206 BIS RapidStrut® Fixing Rail (pg)
267 BIS PushStrut Button

EN-SG 02/2022- Subject to modifications

BIS PushStrut Construction Bracket Q (zp)

(H 29 15)

for easy installation of complex rail constructions

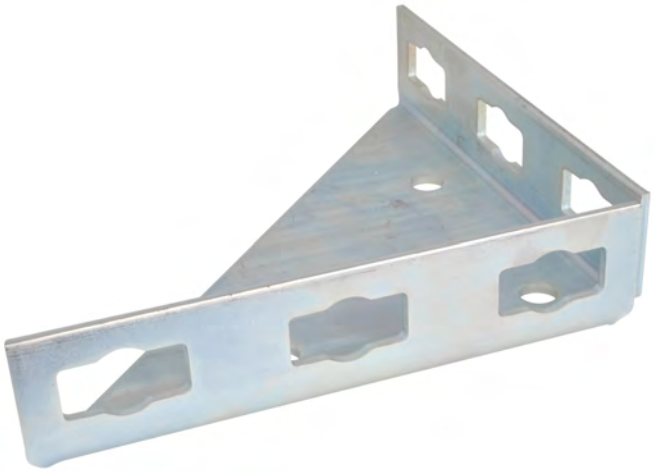

Features and Benefits

- easily combined with all common Strut profiles
- stable rail connection due to fixing to the building
- timesaving and flexible
- easy to remove and reusable
- 3D constructions due to 3D Connectors
- material: steel
- zinc plated

Part No.	L	B (mm)	H (mm)	s (mm)	d1 (mm)	d2 (mm)	k (mm)	k1 (mm)	Pack 1
6594025	200 mm	45	200	4.0	21	13	66	90	10

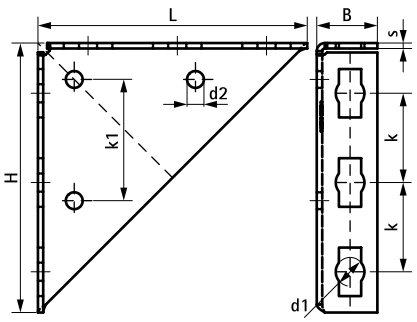

Complementary

206 BIS RapidStrut® Fixing Rail (pg)
267 BIS PushStrut Button

EN-SG 02/2022- Subject to modifications

BIS PushStrut Connector 90°

(H 29 20)

for easy installation of complex rail constructions



659 4 010



659 4 015

Features and Benefits

- easily combined with all common Strut profiles
- lateral edges offers great stability
- flexible use of hole pattern (flexible twist of hole pattern possible)
- timesaving and flexible
- easy to remove and reusable
- 3D constructions due to 3D Connectors
- material: steel
- zinc plated

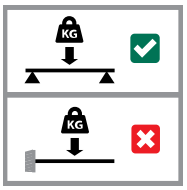

Part No.	Model	B (mm)	H (mm)	s (mm)	d1 (mm)	k (mm)	a (°)	Pack 1
6594010	2-2	45	103	4.0	21	-	90	10
6594015	4-4	45	150	4.0	21	46	90	10

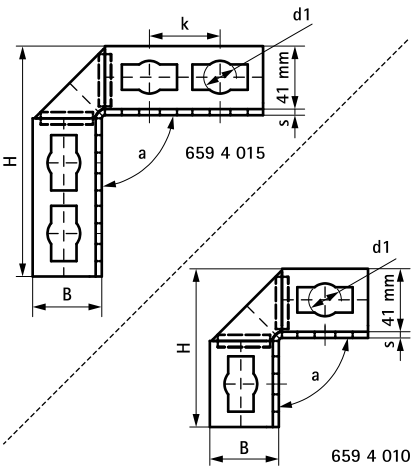

Complementary

206 BIS RapidStrut® Fixing Rail (pg)
267 BIS PushStrut Button

EN-SG 02/2022- Subject to modifications

BIS PushStrut T-Connector

(H 29 25)

for easy installation of complex rail constructions

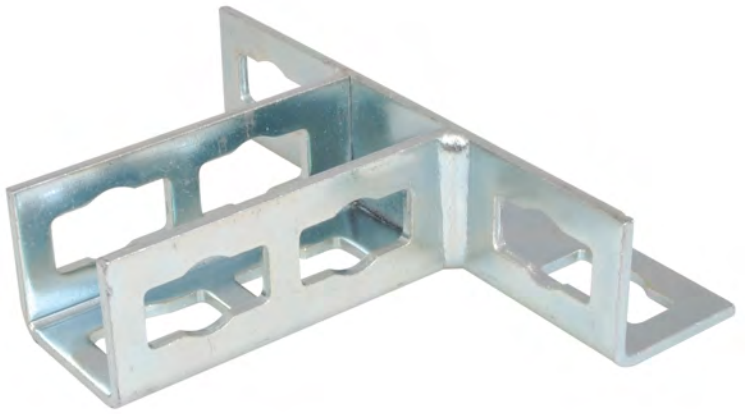

Features and Benefits

- easily combined with all common Strut profiles
- stable T-connection due to lateral edges
- flexible use of hole pattern (flexible twist of hole pattern possible)
- timesaving and flexible
- easy to remove and reusable
- 3D constructions due to 3D Connectors
- material: steel
- zinc plated

Part No.	L	B (mm)	H (mm)	h (mm)	s (mm)	d1 (mm)	k (mm)	k1 (mm)	Pack 1
6594020	175 mm	45	153	108	4.0	21	46	119	25

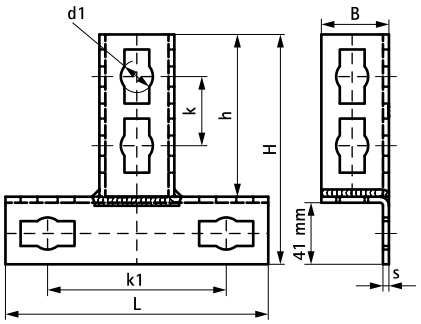

Complementary

206 BIS RapidStrut® Fixing Rail (pg)
267 BIS PushStrut Button

EN-SG 02/2022- Subject to modifications

BIS PushStrut Wallplate

(H 29 28)

for easy installation of complex rail constructions

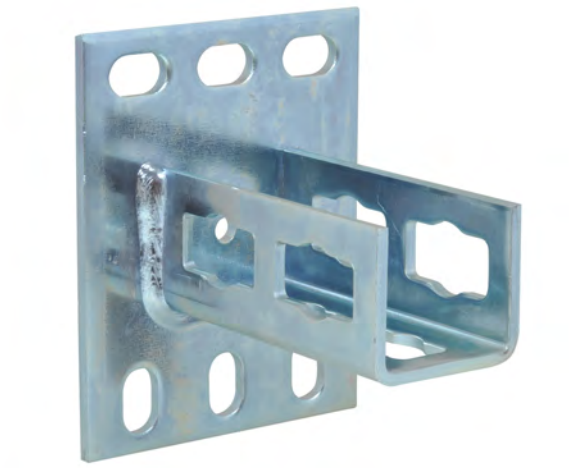

Features and Benefits

- easily combined with all common Strut profiles
- stable connection of rails to the floor, ceiling or wall
- timesaving and flexible
- easy to remove and reusable
- material: steel
- zinc plated

Part No.	L	B (mm)	H (mm)	h (mm)	s (mm)	k (mm)	$F_{a,z}$ (N)	Pack 1
6594035	113 mm	100	130	100	5.0	62	3,000	10

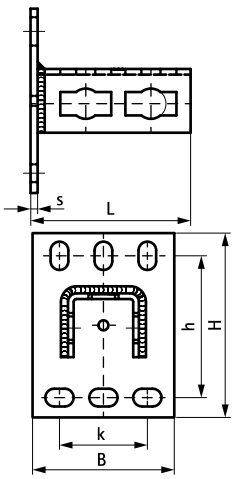

Complementary

206 BIS RapidStrut® Fixing Rail (pg)
267 BIS PushStrut Button

EN-SG 02/2022- Subject to modifications

BIS PushStrut 3D Connector

(H 29 30)

for easy installation of complex rail constructions



659 4 030



659 4 031



659 4 032

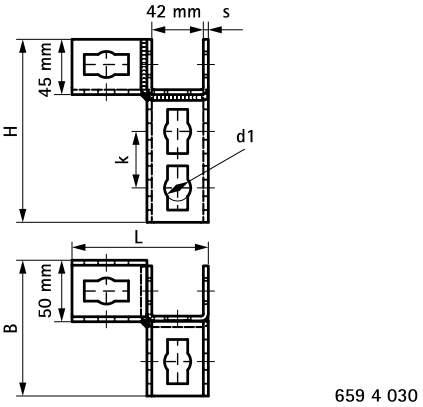

659 4 030

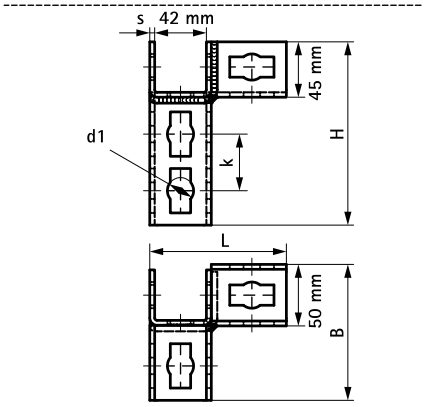

659 4 031

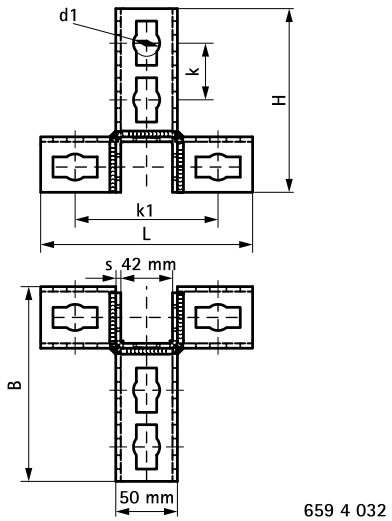

659 4 032

Features and Benefits

- easily combined with all common Strut profiles
- 3D-Connector for complex frame and rail constructions
- universal and simple use
- timesaving and flexible
- easy to remove and reusable
- 3D constructions due to 3D Connectors
- material: steel
- zinc plated

Part No.	Model	L	B (mm)	H (mm)	s (mm)	d1 (mm)	k (mm)	k1 (mm)	Pack 1
6594030	6-3-3-L (branch left)	111 mm	111	149	4.0	21	46	-	10
6594031	6-3-3-R (branch right)	111 mm	111	149	4.0	21	46	-	10
6594032	6-6-3-3 (branch left and right)	172 mm	158	149	4.0	21	46	116	10

Complementary

206 BIS RapidStrut® Fixing Rail (pg)
267 BIS PushStrut Button

EN-SG 02/2022- Subject to modifications

W1000 Strut Clamp

(H 32 215)

to be used with steel pipes and EMT conduit 18 - 60 mm



Features and Benefits

- the new alternative to the standard Strut Clamp
- 3-way use, on strut, on threaded rod, directly on wall or ceiling
- one-piece design - no loose parts
- easier, faster, safer - installs with one hand
- 3-way screw head - Phillips, flat and hex
- unique design allows one clamp to fit multiple pipe sizes - less items to stock
- W Series Clamps are boxed for easy handling - no more bags
- material: steel 1.0242
- surface treatment: high grade Zn-Mg based coating (600 hours salt spray)
- Test Reports:
  - Strength and corrosion:UL 1565 Listed

c UL us LISTED

Part No.	D (mm)	D / IPS (")	D / EMT (")	G	s (mm)	cs	$F_{a,z}$ (N)	$F_{a,z}$ (lbs)	Pack 1
2015021	18 - 21	1/2	1/2	1/4"	1.25	1/4"	890	200	50
2015027	23 - 27	3/4	3/4	3/8"	1.25	1/4"	890	200	50
2015033	29 - 33	1	1	3/8"	1.25	1/4"	980	220	25
2015042	38 - 42	1-1/4	1-1/4	3/8"	1.25	1/4"	980	220	25
2015048	44 - 48	1-1/2	1-1/2	3/8"	1.50	1/4"	1,780	400	25
2015060	56 - 60	2	2	3/8"	1.50	1/4"	1,780	400	25

For additional testing information, please contact our Sales Office!

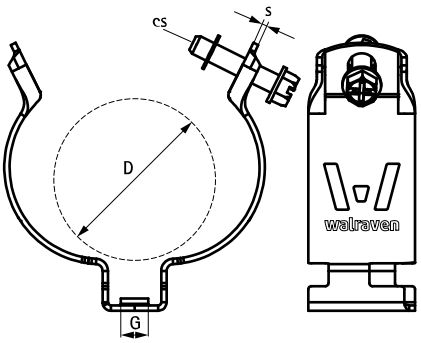

W2000 Cushion Clamp

(H 32 205)

to be used for metal pipe applications 9 - 63 mm



Features and Benefits

- the new alternative to the Cushion Clamp
- one-piece design - no loose parts
- easier, faster, safer - installs with one hand
- 3-way screw head - Phillips, flat and hex
- unique design allows one clamp to fit multiple pipe sizes - less items to stock
- W Series Clamps are boxed for easy handling - no more bags
- material: steel 1.0242
- surface treatment: high grade Zn-Mg based coating (600 hours salt spray)
- black EPDM rubber lining protects against galvanic corrosion
- noise/vibration insulating lining
- age resistant lining
- Test Reports:
  - Strength and corrosion:UL 1565 Listed
  - Noise emission:2016-SG-Bauakustik-1647-001-16

c UL US LISTED

Part No.	D (mm)	D (")	D / CTS (")	D / ACR (")	D / IPS (")	s (mm)	cs	$F_{a,z}$ (N)	$F_{a,z}$ (lbs)	ULS	ULC	Pack 1
2025004	9 - 10	0.354 - 0.394	1/4	3/8	-	1.25	1/4"	890	200	ULS	ULC	50
2025006	11 - 13	0.433 - 0.512	3/8	1/2	-	1.25	1/4"	890	200	ULS	ULC	50
2025008	14 - 16	0.551 - 0.630	1/2	5/8	1/4	1.25	1/4"	890	200	ULS	ULC	50
2025010	17 - 19	0.670 - 0.748	5/8	3/4	3/8	1.25	1/4"	980	220	ULS	ULC	50
2025012	20 - 22	0.787 - 0.866	3/4	7/8	1/2	1.25	1/4"	980	220	ULS	ULC	50
2025014	25 - 29	0.984 - 1.142	1	1-1/8	3/4	1.50	1/4"	1,780	400	ULS	ULC	50
2025016	32 - 35	1.260 - 1.378	1-1/4	1-3/8	1	1.50	1/4"	1,780	400	ULS	ULC	50
2025018	37 - 40					1.50	1/4"	1,780		ULS	ULC	50
2025020	40 - 43	1.575 - 1.693	1-1/2	1-5/8	1-1/4	1.75	5/16"	1,780	400	ULS	ULC	25
2025022	48 - 50	1.890 - 1.969	-	-	1-1/2	1.75	5/16"	1,780	400	ULS	ULC	25
2025024	54 - 56	2.126 - 2.205	2	2-1/8	-	1.75	5/16"	1,780	400	ULS	ULC	25
2025026	60 - 63	2.362 - 2.480	-	-	2	1.75	5/16"	1,780	400	ULS	ULC	25

For additional testing information, please contact our Sales Office!

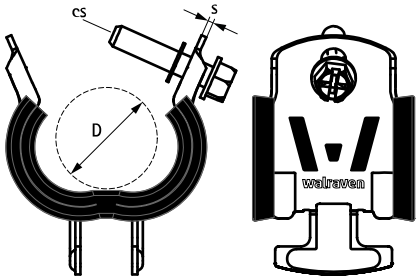

Complementary

207 BIS RapidStrut® Fixing Rail (BUP1000)

Alternative

277 W5000 Cushion Clamp

EN-SG 02/2022- Subject to modifications

W5000 Cushion Clamp

(H 32 210)

to be used for plastic pipe applications 12 - 63 mm



Features and Benefits

- the new alternative to the Cushion Clamp
- with removable spacer washers, making the clamp suitable for either sliding or anchoring
- one-piece design - no loose parts
- easier, faster, safer - installs with one hand
- 3-way screw head - Phillips, flat and hex
- W Series Clamps are boxed for easy handling - no more bags
- material: steel 1.0242
- surface treatment: high grade Zn-Mg based coating (600 hours salt spray)
- green EPDM rubber lining will prevent plasticiser migration
- noise/vibration insulating lining according DIN EN ISO 3822-1
- age resistant lining
- Test Reports:
  - Strength and corrosion:UL 1565 Listed
  - Plasticizer migration behaviour:2016-TR151002-V5
  - Noise emission:2016-SG-Bauakustik-1647-001-16

Part No.	D (mm)	D (")	D / CTS (")	D / IPS (")	s (mm)	cs	$F_{a,z}$ (N)	$F_{a,z}$ (lbs)	ULS	ULC	Pack 1
2055007	12 - 13	0.472 - 0.512	3/8	-	1.25	1/4"	890	200	ULS	ULC	50
2055008	14 - 15	0.512 - 0.591	-	1/4	1.25	1/4"	890	200	ULS	ULC	50
2055009	15 - 16	0.512 - 0.591	1/2	-	1.25	1/4"	890	200	ULS	ULC	50
2055010	17 - 18	0.630 - 0.748	-	3/8	1.25	1/4"	980	220	ULS	ULC	50
2055012	19 - 22	0.787 - 0.906	5/8 - 3/4	1/2	1.25	1/4"	980	220	ULS	ULC	50
2055013	24 - 25	0.984 - 1.142	-	-	1.50	1/4"	1,780	400	ULS	ULC	50
2055014	26 - 29	0.984 - 1.142	1	3/4	1.50	1/4"	1,780	400	ULS	ULC	50
2055016	32 - 35	1.260 - 1.378	1-1/4	1	1.50	1/4"	1,780	400	ULS	ULC	50
2055020	40 - 43	1.575 - 1.693	1-1/2	1-1/4	1.75	5/16"	1,780	400	ULS	ULC	25
2055022	47 - 49	1.850 - 1.929	-	1-1/2	1.75	5/16"	1,780	400	ULS	ULC	25
2055023	50 - 52	1.969 - 2.047	-	-	1.75	5/16"	1,780	400	ULS	ULC	25
2055024	53 - 54	2.087 - 2.126	2	-	1.75	5/16"	1,780	400	ULS	ULC	25
2055025	56 - 58	2.205 - 2.283	-	-	1.75	5/16"	1,780	400	ULS	ULC	25
2055026	60 - 63	2.362 - 2.480	-	2	1.75	5/16"	1,780	400	ULS	ULC	25

For additional testing information, please contact our Sales Office!

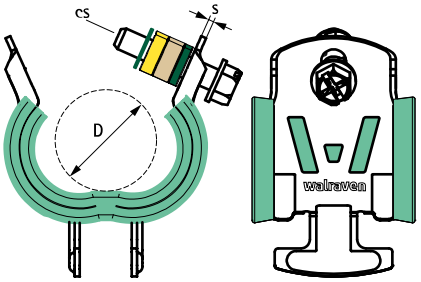

Complementary

207 BIS RapidStrut® Fixing Rail (BUP1000)

BIS Strut Fixing Sets (Electrical)

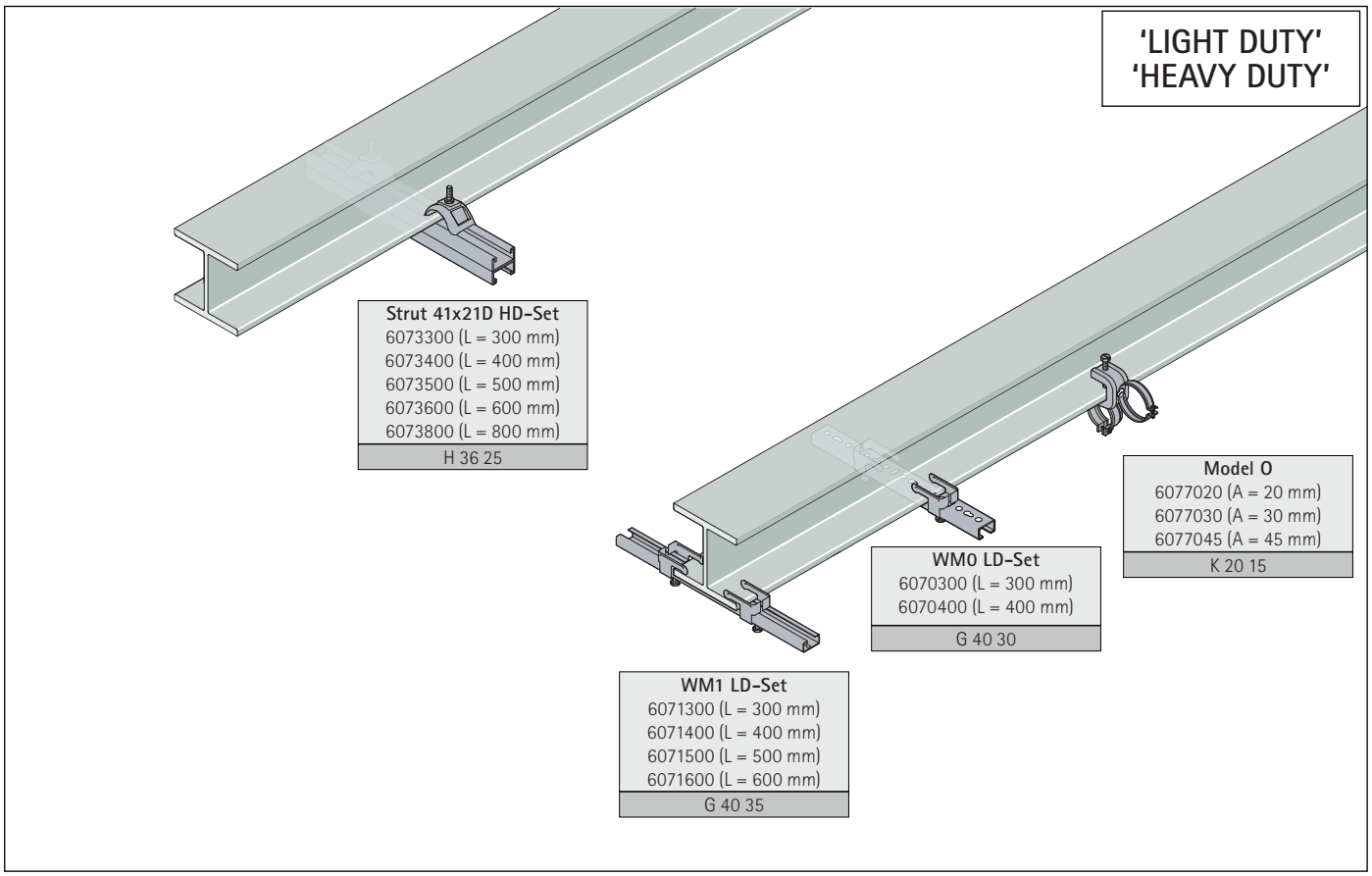

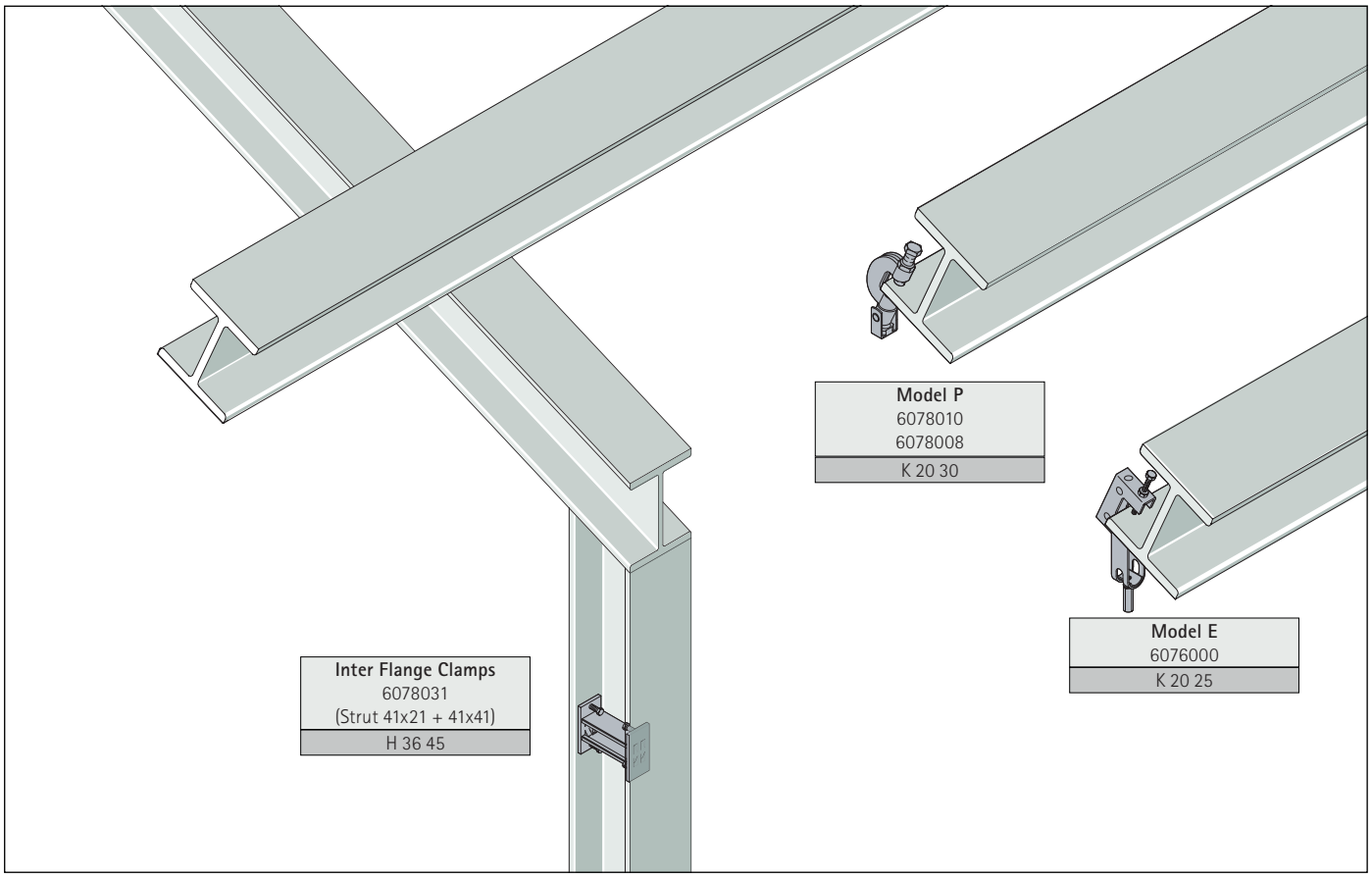

EN-SG 02/2022- Subject to modifications

BIS Strut Clamp with Lining

(H 32 05)

for metal pipes Ø 85 - 315 mm



Features and Benefits

- two-part clamp
- for direct fixing of pipes to Strut Rail
- both ends suitable for locating into Strut Rail
- material: steel 1.0226
- pre-galvanized
- sound insulating lining according DIN 4109
- noise insulating lining, EPDM rubber, black

Part No.	D (mm)	D (°)	DN	B (mm)	H (mm)	h (mm)	s (mm)	SW1 (mm)	Pack 1
2105090	85 - 90	3	80	98	134	12	2.0	13	50
2105110	105 - 110	-	-	117	159	17	2.5	17	50
2105140	130 - 140	5	125	147	189	17	2.5	17	25
2105160	150 - 160	-	-	165	210	17	3.0	17	25
2105200	190 - 200	-	-	208	244	17	3.0	17	25
2105225	215 - 225	8	200	233	276	17	3.0	17	25
2105250	240 - 250	-	-	258	301	17	3.0	17	25
2105315	315	-	-	323	366	17	3.0	17	25

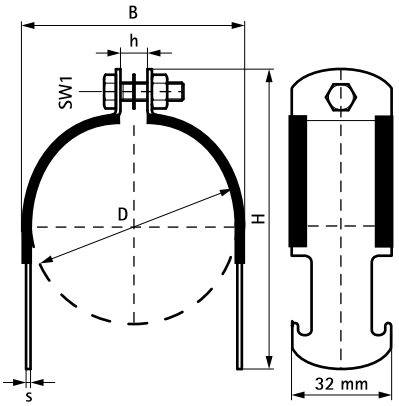

Complementary

211 BIS RapidStrut® Cantilever Arm (BUP1000)
206 BIS RapidStrut® Fixing Rail (pg)

Alternative

280 BIS Strut Clamp

EN-SG 02/2022- Subject to modifications

BIS Strut Clamp

(H 32 10)

for steel pipes Ø 9 - 250 mm



Features and Benefits

- two-part clamp
- for direct fixing of pipes to Strut Rail
- both ends suitable for locating into Strut Rail
- pre-galvanized
- material: steel 1.0226

Part No.	D (mm)	D (")	DN	B (mm)	H (mm)	h (mm)	s (mm)	SW1 (mm)	Pack 1
2005012	10 - 12	1/8	6	15	49	5.0	1.5	10	100
2005014	12 - 14	1/4	8	17	51	5.0	1.5	10	100
2005016	14 - 16	-	-	19	53	5.0	1.5	10	100
2005018	16 - 18	3/8	10	21	55	7.5	1.5	10	100
2005022	20 - 22	1/2	15	25	58	10.0	1.5	10	100
2005026	22 - 26	-	-	29	62	10.0	1.5	10	100
2005030	26 - 30	3/4	20	33	67	10.0	1.5	10	100
2005040	35 - 40	-	-	43	77	10.0	1.5	10	100
2005050	45 - 50	1 1/2	40	54	88	10.0	2.0	13	100
2005055	50 - 55	-	-	59	93	10.0	2.0	13	100
2005060	55 - 60	-	-	64	98	10.0	2.0	13	100
2005070	65 - 70	-	-	74	108	10.0	2.0	13	100
2005075	70 - 75	-	-	79	113	10.0	2.0	13	50
2005085	80 - 85	-	-	89	123	10.0	2.0	13	50
2005090	85 - 90	3	80	94	128	10.0	2.0	13	50
2005095	90 - 95	-	-	99	133	10.0	2.0	13	50
2005100	95 - 100	-	-	104	138	10.0	2.0	13	50
2005105	100 - 105	-	-	110	148	15.0	2.5	17	50
2005110	105 - 110	-	-	115	153	15.0	2.5	17	50
2005120	110 - 120	4	100	125	163	15.0	2.5	17	50
2005130	120 - 130	-	-	135	173	15.0	2.5	17	25
2005140	130 - 140	5	125	145	183	15.0	2.5	17	25
2005150	140 - 150		-	155	193	15.0	2.5	17	25
2005170	160 - 170	6	150	176	214	15.0	3.0	17	25
2005200	190 - 200	-	-	206	244	15.0	3.0	17	25
2005225	215 - 225	8	200	231	269	15.0	3.0	17	25
2005250	240 - 250	-	-	256	294	15.0	3.0	17	25

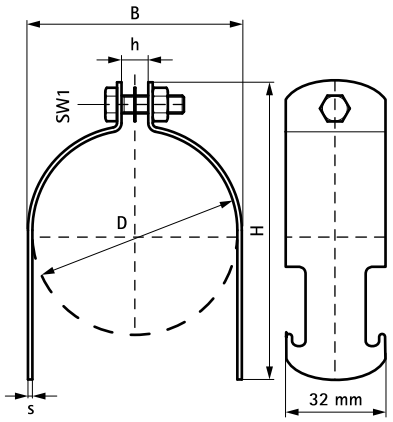

Complementary

211 BIS RapidStrut® Cantilever Arm (BUP1000)
206 BIS RapidStrut® Fixing Rail (pg)

Alternative

279 BIS Strut Clamp with Lining

EN-SG 02/2022- Subject to modifications

BIS Strut Rail Beam Clamp

(H 36 05)

to make Strut rail fabrications



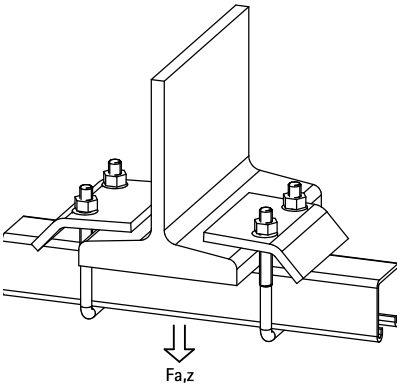

Features and Benefits

- for a solid fixing to steel construction without the need for welding or drilling
- always use 2 beam clamps per fixing
- material: steel 1.0332
- hot dip galvanized

Part No.	A (mm)	G	L	B (mm)	H (mm)	b (mm)	s (mm)	Lm1 (mm)	SW1 (mm)	T_{inst} (Nm)	For Rail	$F_{a,z}$ (N)	Pack 1
66581711	17.5	M10	69 mm	80	90		5.5	60	17	15	Strut 41x21 + 41x41 + 41x21D	5,700	25
66581721	20.0	M10	69 mm	80	130	44	6.0	75	17	15	Strut 41x62 + 41x82 + 41x41D + DS 5 (41 x 51)	5,700	25
Also available in stainless steel 1.4401 (AISI 316).													

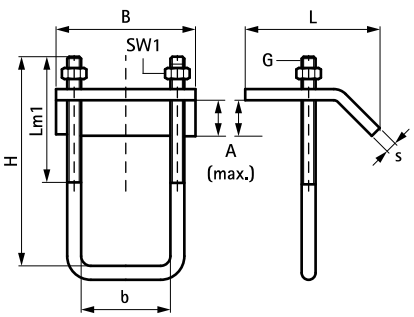

Complementary

206 BIS RapidStrut® Fixing Rail (pg)
207 BIS RapidStrut® Fixing Rail (BUP1000)
205 BIS RapidStrut® Fixing Rail DS 5 (BUP1000)

Complementary

209 BIS RapidStrut® Fixing Rail Double (pg)

Alternative

286 BIS Strut 'Heavy Duty' Beam Clamp
285 BIS Strut 41x21D 'Heavy Duty' Set

BIS Strut Rail Beam Clamp

(H 36 10)

to make Strut rail fabrications



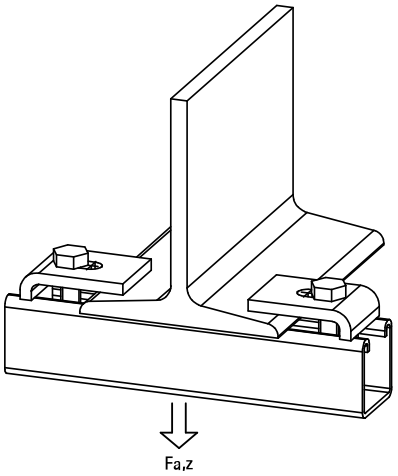

Features and Benefits

- for a solid fixing to steel construction without the need for welding or drilling
- always use 2 beam clamps per fixing
- material: steel 1.0332

Part No.	A (mm)	L	B (mm)	s (mm)	d1 (mm)	k (mm)	$F_{a,z}$ (N)	Pack 1
66583741	15	50 mm	50	6.0	22 x 11	30	8,000	50

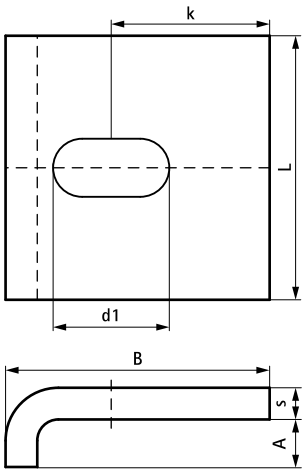

Complementary

206 BIS RapidStrut® Fixing Rail (pg)
209 BIS RapidStrut® Fixing Rail Double (pg)

Alternative

281 BIS Strut Rail Beam Clamp
286 BIS Strut 'Heavy Duty' Beam Clamp
285 BIS Strut 41x21D 'Heavy Duty' Set

EN-SG 02/2022- Subject to modifications

BIS Strut Rail Beam Clamp

(H 36 15)

to make Strut rail fabrications



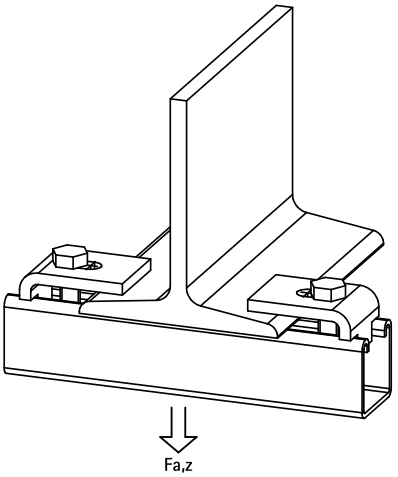

Features and Benefits

- for a solid fixing to steel construction without the need for welding or drilling
- always use 2 beam clamps per fixing
- material: steel 1.0332
- zinc plated

Part No.	A (mm)	L	B (mm)	h (mm)	s (mm)	d1 (mm)	k (mm)	$F_{a,z}$ (N)	Pack 1
66583761	15	40 mm	55	20	6.0	22 x 11	30	8,300	50

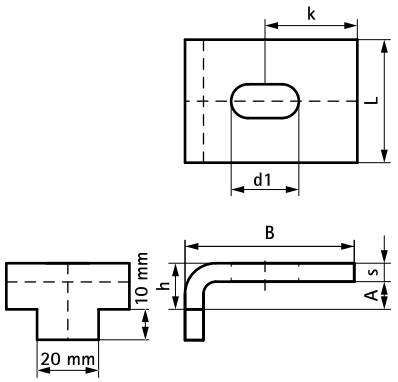

Complementary

206 BIS RapidStrut® Fixing Rail (pg)
209 BIS RapidStrut® Fixing Rail Double (pg)

Alternative

285 BIS Strut 41x21D 'Heavy Duty' Set
286 BIS Strut 'Heavy Duty' Beam Clamp
281 BIS Strut Rail Beam Clamp

EN-SG 02/2022- Subject to modifications

BIS Strut Beam Clamp

(H 36 20)

to make Strut rail fabrications



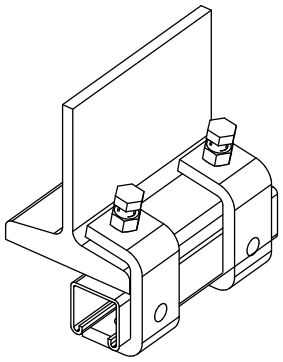

Features and Benefits

- for a solid fixing to steel construction without the need for welding or drilling
- always use 2 beam clamps per fixing
- material: steel 1.0332

Part No.	For Rail	$F_{a,z}$ (N)	ST	Pack 1
66583736	Strut 41x41 + 41x21D	4,500	zinc plated	25

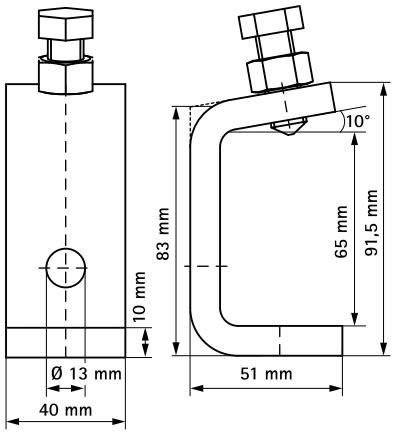

EN-SG 02/2022- Subject to modifications

BIS Strut 41x21D 'Heavy Duty' Set

(H 36 25)

fixing to steel beam up to flange 35 mm

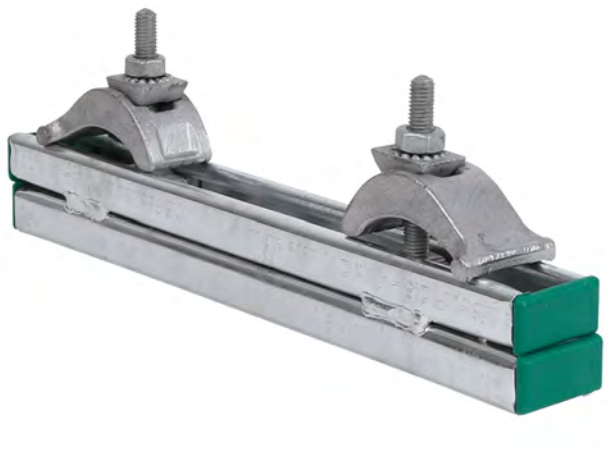

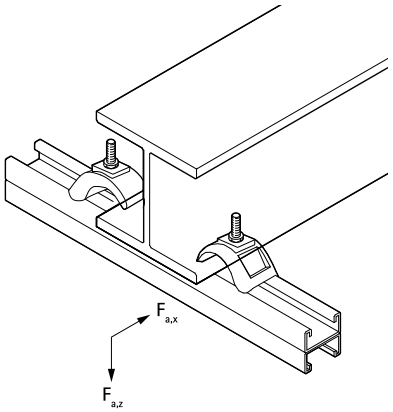

Features and Benefits

- solid cast iron beam clamp for suspension of heavy loads onto beams without welding or drilling
- up to flange thickness 35 mm
- material: beam clamp made of steel; rail made of steel 1.0332
- hot dip galvanized
- consists of:
  - 1 length of Strut Rail 41x21D
  - 2 Beam clamps (Part No. 607 2 002)
  - 4 Rail End Caps
- beam clamp also available loose

Part No.	A (mm)	L	$T_{(max.)}$ (Nm)	From Rail	$F_{a,z}$ (N)	$F_{a,x}$ (N)	Pack 1
6073400	< 35	400 mm	30.0	Strut 41x21D	5.000*	1,500	4
6073600	< 35	600 mm	30.0	Strut 41x21D	5.000*	1,500	4
6073800	< 35	800 mm	30.0	Strut 41x21D	5.000*	1,500	1

** h<=300mm, see drawing on the right side.*

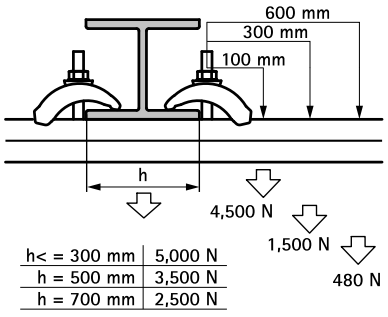

h< = 300 mm	5,000 N
h = 500 mm	3,500 N
h = 700 mm	2,500 N

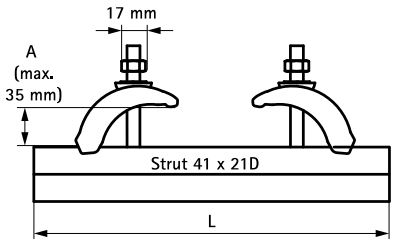

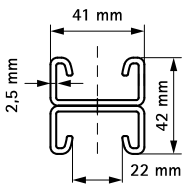

Complementary

242 BIS RapidStrut® Hammerfix G2 (BUP1000)
243 BIS RapidStrut® Hammerfix 'U' G2 (BUP1000)

EN-SG 02/2022- Subject to modifications

BIS Strut 'Heavy Duty' Beam Clamp

(H 36 40)

fixing to steel beam up to flange 35 mm



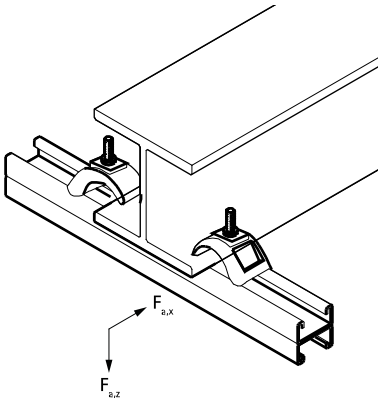

Features and Benefits

- solid cast iron beam clamp for suspension of heavy loads onto beams without welding or drilling
- hot dip galvanized
- up to flange thickness 35 mm
- for fixing of all Strut to a steel beam
- material: steel

Part No.	G	L	B (mm)	H (mm)	CT_{max} (mm)	SW1 (mm)	$T_{(max.)}$ (Nm)	For Rail	$F_{a,z}$ (N)	$F_{a,x}$ (N)	Pack 1
6072002	M10	52 mm	72	80	35	17	30.0	Strut	8,000	1,500	25
$F_{a,z}$: max. allowed load acc. RAL GZ-655 / D-3.3.											

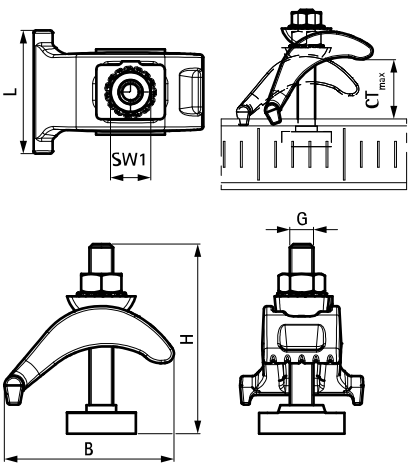

Complementary

206 BIS RapidStrut® Fixing Rail (pg)
205 BIS RapidStrut® Fixing Rail DS 5 (BUP1000)
207 BIS RapidStrut® Fixing Rail (BUP1000)

Complementary

209 BIS RapidStrut® Fixing Rail Double (pg)
210 BIS RapidStrut® Fixing Rail Double (hdg)

Alternative

285 BIS Strut 41x21D 'Heavy Duty' Set

EN-SG 02/2022- Subject to modifications

BIS Strut Inter Flange Clamp

(H 36 50)

fixing to steel beam



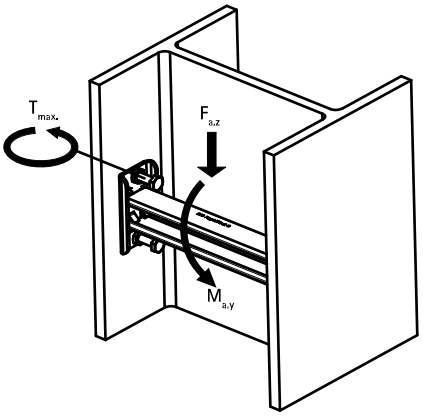

Features and Benefits

- set of two clamping plates, to be installed in combination with Strut Rail
- for connecting installation between the flanges of I- or U-profile steelwork without drilling or welding
- material: clamp made of steel 1.0242 (S250GD); hexagon head bolts M10x40 with tip: steel class 8.8 (EN-ISO 898-1); hexagon thin nuts M10 DIN 439-B: steel class 04 (EM-ISO 898-2)
- clamp: ZM310-MAC (pre-galvanized); fasteners: zinc plated ISO 2081-Fe/Zn5/A (EN ISO 2081:2008)

Part No.	L	B (mm)	H (mm)	s (mm)	$T_{(max.)}$ (Nm)	For Rail	$F_{a,z}$ (N)	$M_{a,y}$ (Nm)	Pack 1
6078031	58	105	46	4	25.0	Strut 41x21 + 41x41	2,100	75.0	10

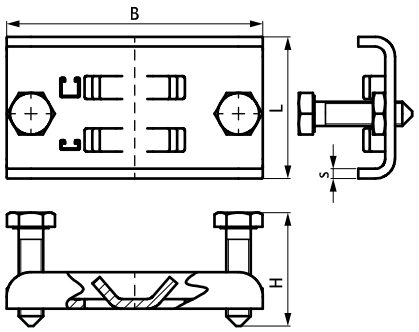

Complementary

206 BIS RapidStrut® Fixing Rail (pg)
231 BIS RapidStrut® Slide Nut G2 (BUP1000)
242 BIS RapidStrut® Hammerfix G2 (BUP1000)

Complementary

233 BIS RapidStrut® Slide Nut MS (ZP)

BIS Strut Rail End Cap

(H 39 05)

finishing of Strut Rail

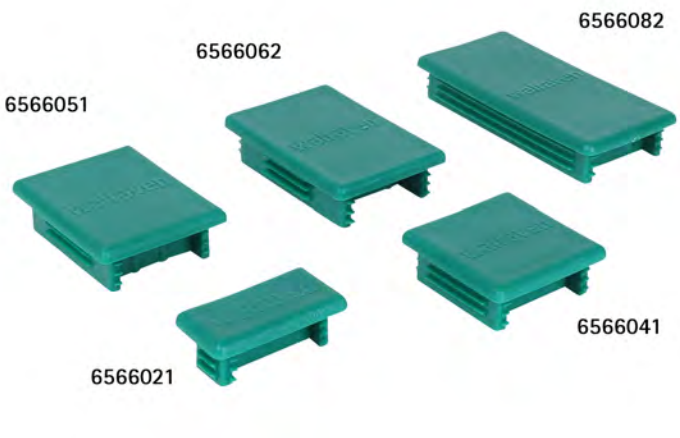

Features and Benefits

- for clean finishing of rail end, covers all burrs
- material: PE (polyethylene), green
- easy to fix securely

Part No.	For Rail	Pack 1	Pack 2
6566021	Strut 41x21	50	2,500
6566041	Strut 41x41	50	1,500
6566051	Strut 41x51 (BIS RapidStrut® DS 5)	40	200
6566062	Strut 41x62	50	500
6566082	Strut 41x82	50	500

Complementary

211 BIS RapidStrut® Cantilever Arm (BUP1000)
206 BIS RapidStrut® Fixing Rail (pg)
205 BIS RapidStrut® Fixing Rail DS 5 (BUP1000)

EN-SG 02/2022- Subject to modifications

BIS Strut PVC Profile (BUP1000)

(H 39 15)

finishing of Strut Rail





Features and Benefits

- closing strip for rail
- reduces the risk or dirt / moisture ingress
- aesthetic finish
- simplifies cleaning / maintenance
- material: PVC (polyvinylchloride), white

Part No.	L	For Rail	Pack 1
6566999	3 m	Strut	25

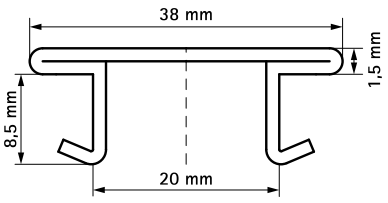

Complementary

211 BIS RapidStrut® Cantilever Arm (BUP1000)
206 BIS RapidStrut® Fixing Rail (pg)
205 BIS RapidStrut® Fixing Rail DS 5 (BUP1000)

EN-SG 02/2022- Subject to modifications

BIS Strut Rubber Strip

(H 39 20)

noise insulation lining for Strut rail





Features and Benefits

- push in strip
- noise insulating lining for rail
- also usable for threaded rod M6, M8 or M10
- building material class B2 according to DIN 4102-1 and class E according to EN 13501-1
- sound insulating lining according DIN 4109
- material: EPDM rubber, black

Part No.	R	L	For Rail	Pack 1
6568042	¼ - ½"	50 mm	Strut	50

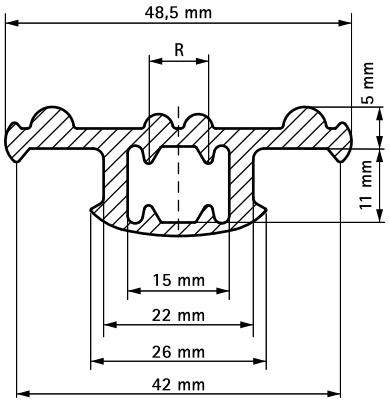

Complementary

211 BIS RapidStrut® Cantilever Arm (BUP1000)
206 BIS RapidStrut® Fixing Rail (pg)
205 BIS RapidStrut® Fixing Rail DS 5 (BUP1000)

EN-SG 02/2022- Subject to modifications

Calculation method

The published safe working loads are calculated with perforated (slotted) rail.

Loads are calculated taking into consideration a maximum deflection (f) of L/200 (according to RAL-GZ 655/B) and a maximum bending stress of 160 N/mm^2 (see picture 1).

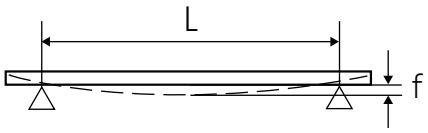

Picture 1

1 N (Newton) = 0,102 kg
1 kg = 9,8 N (Newton)

Fixing of rails to walls or ceilings
The strength of the anchoring of the rail has not been taken into consideration. The installer must verify that the bolts and wall plugs used are suitable for the maximum permitted loading of the rail.

Reading the rail loading tables
The stated values are only valid for the fixing rail. The maximum safe load of all other construction parts have to be verified. The stated maximum safe load is calculated for a static load at free bending support (see picture 2).

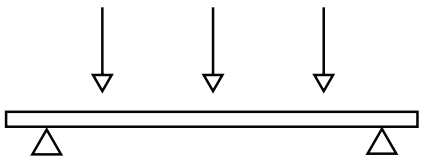

Picture 2

Where the segment is marked with a hyphen, the stated length cannot be safely loaded.

Special conditions
In case of doubt or for special conditions not stated in the loading tables, please do not hesitate to contact our technical department for their advice.

Hanging of rails from the ceiling
When hanging rails from the ceiling we recommend the use of U-formed washers on the open side of the rail (see picture 3).

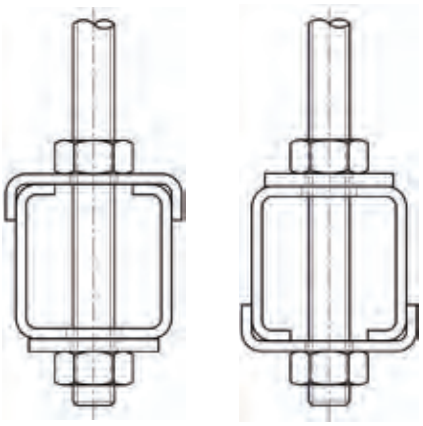

Picture 3

Methods of loading
Where loads are suspended beneath rails (e.g. hanging pipes), the load must not exceed the relevant safe load of the slide nut. To increase rigidity of the installation we recommend the use of a U-formed washer (see picture 4).

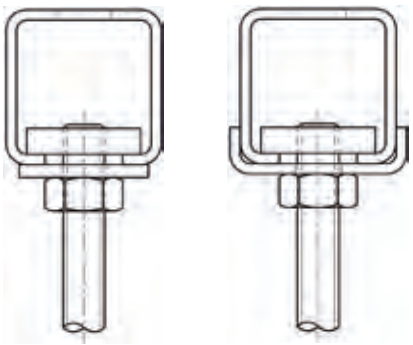

Picture 4

BIS RapidStrut® Fixing rail: suspension on 1 point

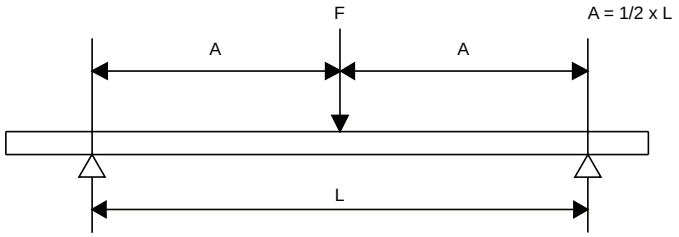

	Single									Double			
L (mm)	41x21 x1.5	41x21 x2.0	41x21 x2.5	41x41 x1.5	41x41 x2.0	41x41 x2.5	41x51 x2.0	41x62 x2.5	41x82 x2.5	41x21D	41x41D	41x62D	41x82D
250	1,848	2,153	2,381	5,427	6,556	7,611	8,812	14,730	23,035	7,081	22,797	46,461	75,937
300	1,540	1,794	1,984	4,523	5,463	6,342	7,343	12,275	19,196	5,901	18,997	38,718	63,281
350	1,320	1,538	1,701	3,877	4,683	5,436	6,294	10,522	16,453	5,058	16,283	33,187	54,241
400	1,155	1,346	1,488	3,392	4,098	4,757	5,507	9,206	14,397	4,426	14,248	29,038	47,461
450	1,027	1,196	1,323	3,015	3,642	4,228	4,895	8,183	12,797	3,934	12,665	25,812	42,187
500	924	1,076	1,190	2,714	3,278	3,805	4,406	7,365	11,517	3,540	11,398	23,231	37,969
600	770	897	992	2,261	2,732	3,171	3,671	6,138	9,598	2,950	9,499	19,359	31,641
700	660	769	850	1,938	2,341	2,718	3,147	5,261	8,227	2,529	8,142	16,593	27,120
800	557	642	719	1,696	2,049	2,378	2,754	4,603	7,198	2,213	7,124	14,519	23,730
900	440	508	568	1,508	1,821	2,114	2,448	4,092	6,399	1,967	6,332	12,906	21,094
1,000	356	411	460	1,357	1,639	1,903	2,203	3,683	5,759	1,770	5,699	11,615	18,984
1,200	247	286	320	1,131	1,366	1,586	1,836	3,069	4,799	1,475	4,749	9,679	15,820
1,400	182	210	235	969	1,171	1,359	1,573	2,630	4,113	1,264	4,071	8,297	13,560
1,600	139	161	180	794	952	1,114	1,377	2,302	3,599	1,015	3,562	7,260	11,865
1,800	110	127	142	628	752	881	1,224	2,046	3,199	802	3,166	6,453	10,547
2,000	89	103	115	508	609	713	1,004	1,841	2,879	650	2,850	5,808	9,492
2,250	70	81	91	402	481	564	794	1,624	2,559	513	2,533	5,162	8,437
2,500	57	66	74	325	390	456	643	1,315	2,303	416	2,280	4,646	7,594
2,750	47	54	61	269	322	377	531	1,087	2,094	344	2,072	4,224	6,903
3,000	40	46	51	226	271	317	446	913	1,890	289	1,863	3,872	6,328
3,250	34	39	44	193	231	270	380	778	1,611	246	1,588	3,574	5,841
3,500	29	34	38	166	199	233	328	671	1,389	212	1,369	3,319	5,424
3,750	25	29	33	145	173	203	286	584	1,210	185	1,193	3,097	5,062
4,000	22	26	29	127	152	178	251	514	1,063	162	1,048	2,904	4,746
4,250	20	23	25	113	135	158	222	455	942	144	928	2,733	4,467
4,500	18	20	23	100	120	141	198	406	840	128	828	2,504	4,219
4,750	16	18	20	90	108	126	178	364	754	115	743	2,248	3,997
5,000	14	16	18	81	97	114	161	329	680	104	671	2,029	3,797
5,250	13	15	17	74	88	104	146	298	617	94	608	1,840	3,616
5,500	12	14	15	67	81	94	133	272	562	86	554	1,676	3,452
5,750	11	12	14	62	74	86	122	249	515	79	507	1,534	3,302
6,000	-	11	13	56	68	79	112	228	473	72	466	1,409	3,052

Max. allowed load in N.

The stated values are only valid for the fixing rail.
The maximum safe load of all other construction parts have to be verified.

For large spans and high rail flanks (> = 62mm), depending on the load, appropriate measures against occurring torsional forces may have to be taken.

BIS RapidStrut® Fixing rail: 2 equal loads

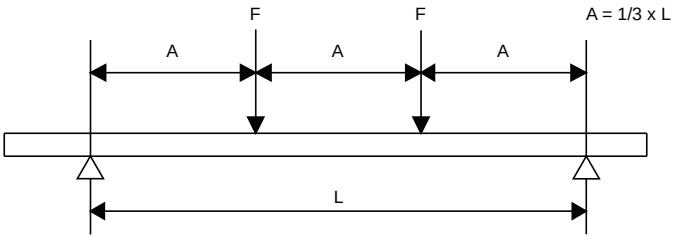

	Single									Double			
L (mm)	41x21 x1.5	41x21 x2.0	41x21 x2.5	41x41 x1.5	41x41 x2.0	41x41 x2.5	41x51 x2.0	41x62 x2.5	41x82 x2.5	41x21D	41x41D	41x62D	41x82D
250	1,386	1,615	1,786	4,070	4,917	5,708	6,609	11,048	17,276	5,311	17,098	34,846	56,953
300	1,155	1,346	1,488	3,392	4,098	4,757	5,507	9,206	14,397	4,426	14,248	29,038	47,461
350	990	1,153	1,275	2,907	3,512	4,077	4,720	7,891	12,340	3,793	12,213	24,890	40,681
400	866	1,009	1,116	2,544	3,073	3,568	4,130	6,905	10,798	3,319	10,686	21,779	35,596
450	770	897	992	2,261	2,732	3,171	3,671	6,138	9,598	2,950	9,499	19,359	31,641
500	693	807	893	2,035	2,459	2,854	3,304	5,524	8,638	2,655	8,549	17,423	28,476
600	578	670	744	1,696	2,049	2,378	2,754	4,603	7,198	2,213	7,124	14,519	23,730
700	427	492	552	1,454	1,756	2,039	2,360	3,946	6,170	1,897	6,106	12,445	20,340
800	327	377	422	1,272	1,537	1,784	2,065	3,452	5,399	1,660	5,343	10,889	17,798
900	258	298	334	1,131	1,366	1,586	1,836	3,069	4,799	1,475	4,749	9,679	15,820
1,000	209	241	270	1,018	1,229	1,427	1,652	2,762	4,319	1,328	4,274	8,712	14,238
1,200	145	168	188	829	993	1,163	1,377	2,302	3,599	1,059	3,562	7,260	11,865
1,400	107	123	138	609	730	854	1,180	1,973	3,085	778	3,053	6,223	10,170
1,600	82	94	106	466	559	654	921	1,726	2,699	596	2,672	5,445	8,899
1,800	65	74	83	368	442	517	728	1,489	2,399	471	2,375	4,840	7,910
2,000	52	60	68	298	358	419	590	1,206	2,160	381	2,137	4,356	7,119
2,250	41	48	53	236	283	331	466	953	1,920	301	1,900	3,872	6,328
2,500	33	39	43	191	229	268	377	772	1,598	244	1,575	3,485	5,695
2,750	28	32	36	158	189	221	312	638	1,320	202	1,302	3,168	5,178
3,000	23	27	30	133	159	186	262	536	1,109	169	1,094	2,904	4,746
3,250	20	23	26	113	135	159	223	457	945	144	932	2,680	4,381
3,500	17	20	22	97	117	137	192	394	815	124	804	2,430	4,068
3,750	15	17	19	85	102	119	168	343	710	108	700	2,117	3,797
4,000	13	15	17	75	89	105	147	302	624	95	615	1,860	3,560
4,250	12	13	15	66	79	93	131	267	553	84	545	1,648	3,350
4,500	10	12	13	59	71	83	116	238	493	75	486	1,470	3,164
4,750	-	11	12	53	63	74	105	214	443	68	436	1,319	2,858
5,000	-	-	11	48	57	67	94	193	399	61	394	1,191	2,579
5,250	-	-	-	43	52	61	86	175	362	55	357	1,080	2,340
5,500	-	-	-	39	47	55	78	159	330	50	325	984	2,132
5,750	-	-	-	36	43	51	71	146	302	46	298	900	1,950
6,000	-	-	-	33	40	47	66	134	277	42	273	827	1,791

Max. allowed load in N. per suspension point (F).

The stated values are only valid for the fixing rail.
The maximum safe load of all other construction parts have to be verified.

For large spans and high rail flanks (> = 62mm), depending on the load, appropriate measures against occurring torsional forces may have to be taken.

BIS RapidStrut® Fixing rail: 3 equal loads

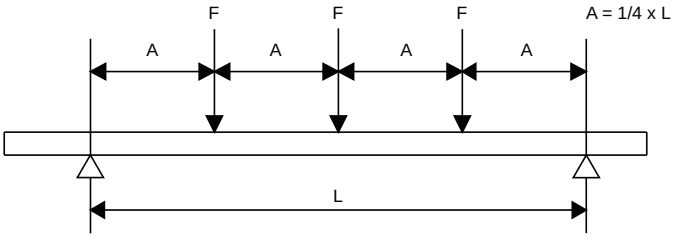

	Single									Double			
L (mm)	41x21 x1.5	41x21 x2.0	41x21 x2.5	41x41 x1.5	41x41 x2.0	41x41 x2.5	41x51 x2.0	41x62 x2.5	41x82 x2.5	41x21D	41x41D	41x62D	41x82D
250	924	1,076	1,190	2,714	3,278	3,805	4,406	7,365	11,517	3,540	11,398	23,231	37,969
300	770	897	992	2,261	2,732	3,171	3,671	6,138	9,598	2,950	9,499	19,359	31,641
350	660	769	850	1,938	2,341	2,718	3,147	5,261	8,227	2,529	8,142	16,593	27,120
400	578	673	744	1,696	2,049	2,378	2,754	4,603	7,198	2,213	7,124	14,519	23,730
450	513	598	661	1,508	1,821	2,114	2,448	4,092	6,399	1,967	6,332	12,906	21,094
500	462	538	595	1,357	1,639	1,903	2,203	3,683	5,759	1,770	5,699	11,615	18,984
600	385	449	496	1,131	1,366	1,586	1,836	3,069	4,799	1,475	4,749	9,679	15,820
700	306	353	396	969	1,171	1,359	1,573	2,630	4,113	1,264	4,071	8,297	13,560
800	234	270	303	848	1,024	1,189	1,377	2,302	3,599	1,106	3,562	7,260	11,865
900	185	214	239	754	911	1,057	1,224	2,046	3,199	983	3,166	6,453	10,547
1,000	150	173	194	678	820	951	1,101	1,841	2,879	885	2,850	5,808	9,492
1,200	104	120	135	565	683	793	918	1,534	2,399	738	2,375	4,840	7,910
1,400	77	88	99	437	524	613	787	1,315	2,057	558	2,035	4,148	6,780
1,600	59	68	76	335	401	469	661	1,151	1,800	427	1,781	3,630	5,933
1,800	46	53	60	264	317	371	522	1,023	1,600	338	1,583	3,226	5,273
2,000	38	43	48	214	257	300	423	865	1,440	274	1,425	2,904	4,746
2,250	30	34	38	169	203	237	334	684	1,280	216	1,266	2,581	4,219
2,500	24	28	31	137	164	192	271	554	1,146	175	1,130	2,323	3,797
2,750	20	23	26	113	136	159	224	458	947	145	934	2,112	3,452
3,000	17	19	22	95	114	133	188	385	796	122	785	1,936	3,164
3,250	14	16	18	81	97	114	160	328	678	104	669	1,787	2,921
3,500	12	14	16	70	84	98	138	283	585	89	576	1,659	2,712
3,750	11	12	14	61	73	85	120	246	509	78	502	1,518	2,531
4,000	-	11	12	54	64	75	106	216	448	68	441	1,335	2,373
4,250	-	-	11	47	57	67	94	192	397	61	391	1,182	2,233
4,500	-	-	-	42	51	59	84	171	354	54	349	1,054	2,109
4,750	-	-	-	38	45	53	75	153	317	48	313	946	1,998
5,000	-	-	-	34	41	48	68	138	287	44	282	854	1,850
5,250	-	-	-	31	37	44	61	126	260	40	256	775	1,678
5,500	-	-	-	28	34	40	56	114	237	36	233	706	1,529
5,750	-	-	-	26	31	36	51	105	217	33	214	646	1,399
6,000	-	-	-	24	29	33	47	96	199	30	196	593	1,285

Max. allowed load in N. per suspension point (F).

The stated values are only valid for the fixing rail.
The maximum safe load of all other construction parts have to be verified.

For large spans and high rail flanks (> = 62mm), depending on the load, appropriate measures against occurring torsional forces may have to be taken.

BIS RapidStrut® Fixing rail: uniformly distributed load

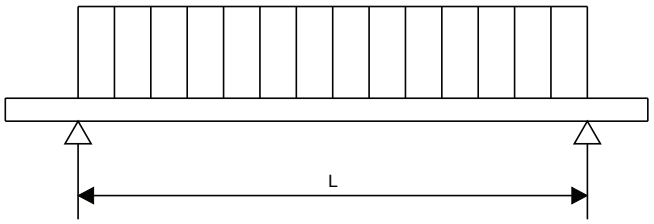

	Single									Double			
L (mm)	41x21 x1.5	41x21 x2.0	41x21 x2.5	41x41 x1.5	41x41 x2.0	41x41 x2.5	41x51 x2.0	41x62 x2.5	41x82 x2.5	41x21D	41x41D	41x62D	41x82D
250	3,697	4,306	4,762	10,854	13,112	15,222	17,623	29,460	46,070	14,162	45,594	92,923	151,875
300	3,081	3,588	3,968	9,045	10,927	12,685	14,686	24,550	38,391	11,802	37,995	77,436	126,562
350	2,640	3,076	3,401	7,753	9,366	10,873	12,588	21,043	32,907	10,116	32,567	66,373	108,482
400	2,310	2,691	2,976	6,784	8,195	9,514	11,014	18,413	28,794	8,851	28,496	58,077	94,922
450	2,054	2,392	2,645	6,030	7,285	8,457	9,791	16,367	25,594	7,868	25,330	51,624	84,375
500	1,848	2,153	2,381	5,427	6,556	7,611	8,812	14,730	23,035	7,081	22,797	46,461	75,937
600	1,540	1,794	1,984	4,523	5,463	6,342	7,343	12,275	19,196	5,901	18,997	38,718	63,281
700	1,163	1,342	1,503	3,877	4,683	5,436	6,294	10,522	16,453	5,058	16,283	33,187	54,241
800	891	1,028	1,151	3,392	4,098	4,757	5,507	9,206	14,397	4,426	14,248	29,038	47,461
900	704	812	909	3,015	3,642	4,228	4,895	8,183	12,797	3,934	12,665	25,812	42,187
1,000	570	658	737	2,714	3,278	3,805	4,406	7,365	11,517	3,540	11,398	23,231	37,969
1,200	396	457	512	2,260	2,708	3,170	3,671	6,138	9,598	2,887	9,499	19,359	31,641
1,400	291	336	376	1,660	1,989	2,329	3,147	5,261	8,227	2,121	8,142	16,593	27,120
1,600	223	257	288	1,271	1,523	1,783	2,511	4,603	7,198	1,624	7,124	14,519	23,730
1,800	176	203	227	1,004	1,204	1,409	1,984	4,059	6,399	1,283	6,332	12,906	21,094
2,000	143	164	184	814	975	1,141	1,607	3,288	5,759	1,039	5,699	11,615	18,984
2,250	113	130	146	643	770	902	1,270	2,598	5,119	821	5,066	10,325	16,875
2,500	91	105	118	521	624	730	1,028	2,104	4,355	665	4,293	9,292	15,187
2,750	75	87	97	430	516	604	850	1,739	3,599	550	3,548	8,448	13,807
3,000	63	73	82	362	433	507	714	1,461	3,024	462	2,981	7,744	12,656
3,250	54	62	70	308	369	432	609	1,245	2,577	394	2,540	7,148	11,683
3,500	47	54	60	266	318	373	525	1,074	2,222	339	2,190	6,624	10,848
3,750	41	47	52	231	277	325	457	935	1,936	296	1,908	5,770	10,125
4,000	36	41	46	203	244	285	402	822	1,701	260	1,677	5,071	9,492
4,250	32	36	41	180	216	253	356	728	1,507	230	1,486	4,492	8,934
4,500	28	32	36	161	193	225	317	649	1,344	205	1,325	4,007	8,437
4,750	25	29	33	144	173	202	285	583	1,206	184	1,189	3,596	7,791
5,000	23	26	29	130	156	183	257	526	1,089	166	1,073	3,246	7,031
5,250	21	24	27	118	141	166	233	477	988	151	974	2,944	6,378
5,500	19	22	24	108	129	151	212	435	900	137	887	2,682	5,811
5,750	17	20	22	98	118	138	194	398	823	126	812	2,454	5,317
6,000	16	18	20	90	108	127	179	365	756	115	745	2,254	4,883

Max. allowed load in N.

The stated values are only valid for the fixing rail.
The maximum safe load of all other construction parts have to be verified.

For large spans and high rail flanks (> = 62mm), depending on the load, appropriate measures against occurring torsional forces may have to be taken.

BIS RapidStrut® Cantilever arms: suspension on 1 point

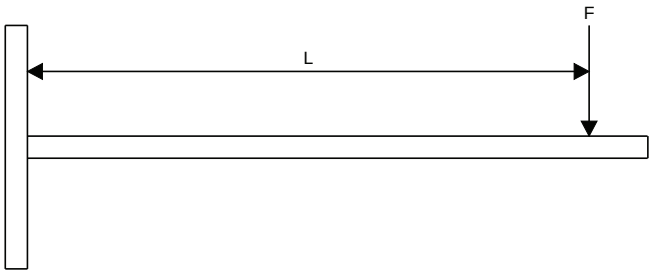

	Single									Double			
L (mm)	41x21 x1.5	41x21 x2.0	41x21 x2.5	41x41 x1.5	41x41 x2.0	41x41 x2.5	41x51 x2.0	41x62 x2.5	41x82 x2.5	41x21D	41x41D	41x62D	41x82D
100	1,155	1,346	1,488	3,392	4,098	4,757	5,507	9,206	14,397	4,426	14,248	29,038	47,461
150	770	897	992	2,261	2,732	3,171	3,671	6,138	9,598	2,950	9,499	19,359	31,641
200	557	642	719	1,696	2,049	2,378	2,754	4,603	7,198	2,213	7,124	14,519	23,730
250	356	411	460	1,357	1,639	1,903	2,203	3,683	5,759	1,770	5,699	11,615	18,984
300	247	286	320	1,131	1,366	1,586	1,836	3,069	4,799	1,475	4,749	9,679	15,820
350	182	210	235	969	1,171	1,359	1,573	2,630	4,113	1,264	4,071	8,297	13,560
400	139	161	180	794	952	1,114	1,377	2,302	3,599	1,015	3,562	7,260	11,865
450	110	127	142	628	752	881	1,224	2,046	3,199	802	3,166	6,453	10,547
500	89	103	115	508	609	713	1,004	1,841	2,879	650	2,850	5,808	9,492
550	74	85	95	420	504	589	830	1,674	2,618	537	2,591	5,280	8,629
600	62	71	80	353	423	495	697	1,427	2,399	451	2,375	4,840	7,910
700	45	52	59	259	311	364	512	1,048	2,057	331	2,035	4,148	6,780
800	35	40	45	199	238	279	392	803	1,661	254	1,638	3,630	5,933
900	27	32	36	157	188	220	310	634	1,313	200	1,294	3,226	5,273
1,000	22	26	29	127	152	178	251	514	1,063	162	1,048	2,904	4,746
1,100	18	21	24	105	126	147	208	425	879	134	866	2,619	4,315
1,200	15	18	20	88	106	124	174	357	738	113	728	2,201	3,955
1,300	13	15	17	75	90	106	149	304	629	96	620	1,875	3,651
1,400	11	13	15	65	78	91	128	262	542	83	535	1,617	3,390
1,500	-	11	13	56	68	79	112	228	473	72	466	1,409	3,052

Max. allowed load in N.

The stated values are only valid for the fixing rail.
The maximum safe load of all other construction parts have to be verified.

For large spans and high rail flanks (> = 62mm), depending on the load, appropriate measures against occurring torsional forces may have to be taken.

BIS RapidStrut® Cantilever arms: uniformly distributed load

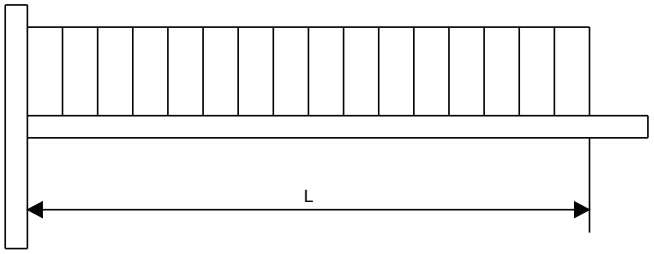

	Single									Double			
L (mm)	41x21 x1.5	41x21 x2.0	41x21 x2.5	41x41 x1.5	41x41 x2.0	41x41 x2.5	41x51 x2.0	41x62 x2.5	41x82 x2.5	41x21D	41x41D	41x62D	41x82D
100	2,310	2,691	2,976	6,784	8,195	9,514	11,014	18,413	28,794	8,851	28,496	58,077	94,922
150	1,540	1,794	1,984	4,523	5,463	6,342	7,343	12,275	19,196	5,901	18,997	38,718	63,281
200	1,155	1,346	1,488	3,392	4,098	4,757	5,507	9,206	14,397	4,426	14,248	29,038	47,461
250	924	1,076	1,190	2,714	3,278	3,805	4,406	7,365	11,517	3,540	11,398	23,231	37,969
300	660	761	853	2,261	2,732	3,171	3,671	6,138	9,598	2,950	9,499	19,359	31,641
350	485	559	626	1,938	2,341	2,718	3,147	5,261	8,227	2,529	8,142	16,593	27,120
400	371	428	480	1,696	2,049	2,378	2,754	4,603	7,198	2,213	7,124	14,519	23,730
450	293	338	379	1,508	1,821	2,114	2,448	4,092	6,399	1,967	6,332	12,906	21,094
500	238	274	307	1,356	1,625	1,902	2,203	3,683	5,759	1,732	5,699	11,615	18,984
550	196	227	254	1,121	1,343	1,572	2,003	3,348	5,235	1,432	5,181	10,559	17,258
600	165	190	213	942	1,128	1,321	1,836	3,069	4,799	1,203	4,749	9,679	15,820
700	121	140	157	692	829	970	1,367	2,630	4,113	884	4,071	8,297	13,560
800	93	107	120	530	635	743	1,046	2,140	3,599	677	3,562	7,260	11,865
900	73	85	95	418	501	587	827	1,691	3,199	535	3,166	6,453	10,547
1,000	59	69	77	339	406	476	670	1,370	2,835	433	2,795	5,808	9,492
1,100	49	57	63	280	336	393	553	1,132	2,343	358	2,310	5,280	8,629
1,200	41	48	53	235	282	330	465	951	1,969	301	1,941	4,840	7,910
1,300	35	41	45	201	240	281	396	811	1,678	256	1,654	4,467	7,302
1,400	30	35	39	173	207	243	342	699	1,447	221	1,426	4,148	6,780
1,500	26	30	34	151	181	211	298	609	1,260	192	1,242	3,757	6,328

Max. allowed load in N.

The stated values are only valid for the fixing rail.
The maximum safe load of all other construction parts have to be verified.

For large spans and high rail flanks (> = 62mm), depending on the load, appropriate measures against occurring torsional forces may have to be taken.

Maxx Bolt Set (ZFC)

(H2 05 28)

for fixing to Maxx Heavy Rail Profiles



Features and Benefits

- for fixing in profile perforation
- the bolt size is ideally suited to fit the perforation of Maxx Heavy Rail Profile
- max. torque is 80Nm
- hexagon nut with collar and serration
- material: steel, strength class 8.8
- surface treatment: zinc flake coated
- consists of:
  - 1 bolt
  - 1 nut
  - 1 washer

Part No.	Model	G	L	Pack 1
614581213	Maxx 100 Bolt Set	M12	140 mm	25
614581216	Maxx 120 Bolt Set	M12	160 mm	25
614581614	Maxx 100 Bolt Set	M16	140 mm	25
614581616	Maxx 120 Bolt Set	M16	160 mm	25

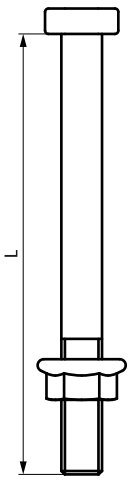

EN-SG 02/2022- Subject to modifications

Maxx End Cap

(H2 05 40)

finishing of rail



Features and Benefits

- for clean finishing of rail end, covers all burrs
- easy to fix securely
- suitable for Maxx Profile MX100 and MX120
- material: PE (polyethylene), green

Part No.	Type	Pack 1
6566810	EC100	1
6566812	EC120	1

BIS Rooftop + Solar Fixings



BIS Support System for Rooftop Installations

BIS Yeti® 480 Support System (BUP1000) 302
BIS Yeti® Ballast Block 303
BIS Yeti® 335 Support System (BUP1000) 304
BIS Yeti® 335 H-Set with Rail (BUP1000) 305
BIS Yeti® 335 Hinge (BUP1000) 306
BIS Yeti® 335 Frame Set 307
BIS Yeti® 130 Support System 308
BIS Yeti® 130 Frame Set (BUP1000) 309
BIS Yeti® 130 Cable Tray Set (BUP1000) 310
BIS Yeti® Triplex Separation Layer 311
BIS Yeti® Service Deck Grid 312
BIS Yeti® Service Deck Step 313
Fastening Set for Grids 314
Rooftop Anchor 315
BIS Ursus Foot Support System (BUP1000) 316



BIS Solar Panel Fixings

BIS Fixing Brackets - 755 / 756 317

BIS Yeti® 480 Support System (BUP1000)

(I 04 05)

for Rooftop Installations







SG Bauakustik
Nr. 1762-001-19

UV

Features and Benefits

- modular supporting system for climate installations, solar panels, walkways, pipe work, cable ways, etc.
- for flat and low pitched roofs
- adjustable up to 7° to compensate roof pitch
- 360° rotatable insert for BIS RapidStrut® 41x41 or BIS RapidStrut® DS 5 (41x52 mm)
- with non-slip anti-vibration mat
- with optional stackable ballast block for increased weight / stability
- mouldings made of WPC, a composite of recycled plastic and wood fibre
- resistant to UV and chemical influences
- noise reduction according to DIN EN ISO 10140-1 and DIN EN ISO 10140-3 up to 31 dB(A)
- UV-resistance according to EN ISO 16474-3:2014-02
- BIS Yeti 480 H-set consisting of:
  - 2 x BIS Yeti® 480 vertical, including non-slip anti-vibration mat (made of rubber)
  - 4 x BIS Strut Connector 90°
  - 8 x hexagon head bolts and slide nuts

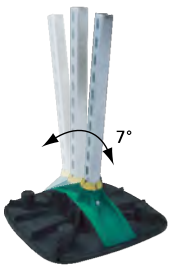



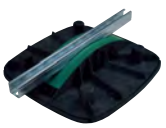



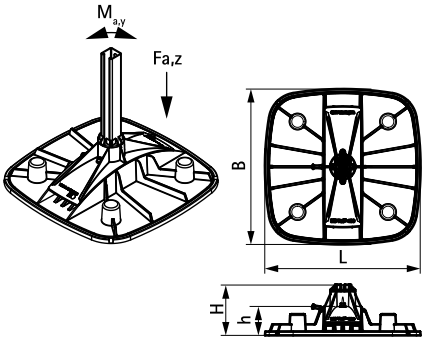

Part No.	Model	L	B (mm)	H (mm)	h (mm)	$F_{a,z}$ (N)	$F_{a,z\ 2}$ (N)	$M_{a,y}$ (Nm)	Pack 1	Pack 2
67685001	Vertical	480 mm	480	160	80	20,000*	30,000**	200.0	1	25
67685101	Horizontal	480 mm	480	-	-	20,000*	30,000**	200.0	1	30
67685301	H-set (without Strut Rail)	480 mm	480	-	-	20,000*	30,000**	200.0	1	-

** = Maximum allowed load for Strut 41x41x2.5.*
*** = Maximum allowed load for Strut 41x51x2.0 - DS5.*
For a detailed calculation and for support how to spread the load please contact Walraven Technical Support.
In cases where a foot is used in roof applications, the installer is obliged to verify maximum load capacity of roof before installation.

Complementary

303 BIS Yeti® Ballast Block
311 BIS Yeti® Triplex Separation Layer

EN-SG 02/2022- Subject to modifications

BIS Yeti® Ballast Block

(I 04 07)





Features and Benefits

- Ballast Block for BIS Yeti® 480 Support System
- re-inforced concrete ballast block for outside use
- easy to install, without tools
- stackable due to special design
- increases stability against wind loads
- material: reinforced concrete

Part No.	L	B (mm)	H (mm)	h (mm)	k (mm)	Weight (kg)	Pack 1	Pack 2
67685401	380 mm	100	140	110	283	8	1	100

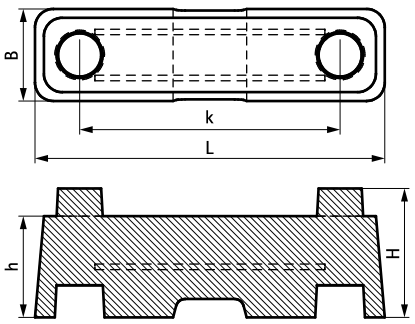

Complementary

302 BIS Yeti® 480 Support System (BUP1000)

EN-SG 02/2022- Subject to modifications

BIS Yeti® 335 Support System (BUP1000)

(I 04 10)

for Rooftop Installations





Features and Benefits

- modular supporting system for climate installations, solar panels, walkways, pipe work, cable ways, etc.
- for flat roofs
- for horizontal and vertical applications
- 360° rotatable insert for BIS RapidStrut® 41x41 or BIS RapidStrut® DS 5 (41x52 mm)
- with non-slip anti-vibration mat
- mouldings made of WPC, a composite of recycled plastic and wood fibre
- resistant to UV and chemical influences
- noise reduction according to DIN EN ISO 10140-1 and DIN EN ISO 10140-3 up to 31 dB(A)
- UV-resistance according to EN ISO 16474-3:2014-02
- BIS Yeti 335 H-set consisting of:
  - 2 x BIS Yeti® 335 including non-slip anti-vibration mat (made of rubber)
  - 4 x BIS Strut Connector 90°
  - 8 x hexagon head bolts and slide nuts

SG Bauakustik
Nr. 1762-001-19

Part No.	Model	L	B (mm)	H (mm)	h (mm)	$F_{a,z}$ (N)	$F_{a,z\ 2}$ (N)	$M_{a,y}$ (Nm)	Pack 1	Pack 2
67685201	Vertical	335 mm	335	100	20	20,000*	30,000**	200.0	1	75
67685302	H-set (without Strut Rail)	335 mm	335	-	-	20,000*	30,000**	200.0	1	27

** = Maximum allowed load for Strut 41x41x2.5.*
*** = Maximum allowed load for Strut 41x51x2.0 - DS5.*
For a detailed calculation and for support how to spread the load please contact Walraven Technical Support.
In cases where a foot is used in roof applications, the installer is obliged to verify maximum load capacity of roof before installation.

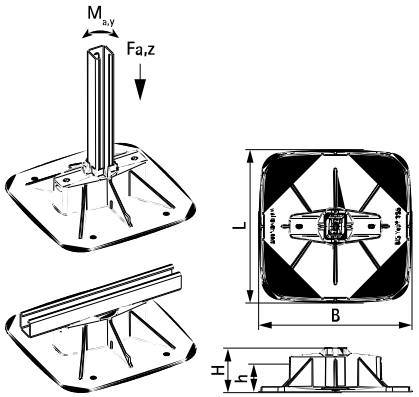

Complementary
311 BIS Yeti® Triplex Separation Layer
306 BIS Yeti® 335 Hinge (BUP1000)

Alternative
308 BIS Yeti® 130 Support System

EN-SG 02/2022- Subject to modifications

BIS Yeti® 335 H-Set with Rail (BUP1000)

(I 04 11)

for Rooftop Installations



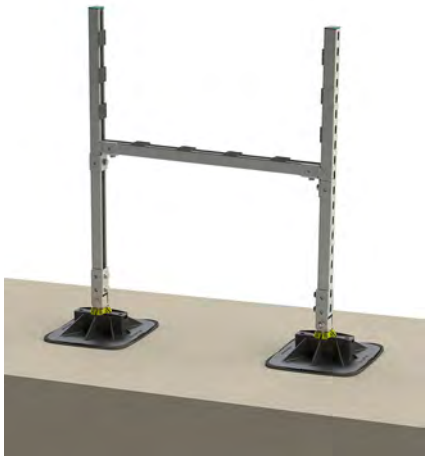

Features and Benefits

- complete set for supporting installation appliances on flat and low pitched roofs
- for quick installation of air duct channels on the roof
- adjustable to compensate roof pitch and 360° rotatable insert for flexibility in positioning
- with non-slip anti-vibration mat
- predefined load capacity (see assembly instruction), calculation not necessary
- mouldings made of WPC, a composite of recycled plastic and wood fibre
- resistant to UV and chemical influences
- surface protection:
  - product is part of the BIS UltraProtect® 1000 system
  - suitable for in- and outdoor applications
  - stands min. 1,000 hours salt spray test (max. 5% red rust) according to ISO 9227
- noise reduction according to DIN EN ISO 10140-1 and DIN EN ISO 10140-3 up to 31 dB(A)
- UV-resistance according to EN ISO 16474-3:2014-02
- Part No. 67685310 consisting of:
  - 2 x BIS Yeti® 335 including non-slip anti-vibration mat (made of rubber)
  - 3 x 1.0 m BIS RapidStrut® Fixing Rail 41x41/2.0 (BUP1000), cut to length and deburred
  - 2 x BIS Yeti 335 Hinge (BUP1000)
  - 2 x BIS Strut Connector 90° / 2D (BUP1000)
  - 10 x BIS Strut Rubber Strip 50mm for noise insulating according DIN 4109
  - all connecting elements, rail end caps and bolts are included and most are pre-assembled

SG Bauakustik
Nr. 1762-001-19

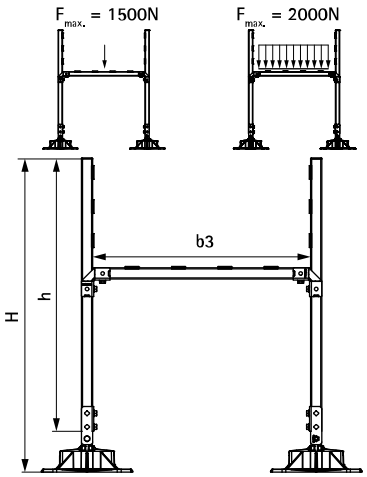

Part No.	b3 (mm)	H (mm)	h (mm)	Pack 1
67685310	1,000	1,150	1,000	1

Maximum load ($F_{a,z}$) depends on the load capacity of the trapezium shaped roofing sheet. Before mounting, the roof load capacity has to be confirmed by a structural engineer.
If changes to the mounting parameters is necessary then please contact Walraven Technical Department.

Complementary

207 BIS RapidStrut® Fixing Rail (BUP1000)

BIS Yeti® 335 Hinge (BUP1000)

(I 04 12)

for Rooftop Installations



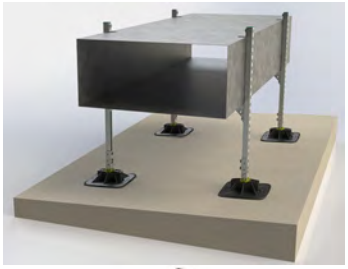



Features and Benefits

- adjustable connector for rails
- fully flexible in angle and direction due to rotatable insert in Yeti 335
- material: steel 1.0332
- surface protection:
  - product is part of the BIS UltraProtect® 1000 system
  - suitable for in- and outdoor applications
  - stands min. 1,000 hours salt spray test (max. 5% red rust) according to ISO 9227
- UV-resistance according to EN ISO 16474-3:2014-02

Part No.	L	B (mm)	H (mm)	h (mm)	b (mm)	s (mm)
67685414	40	70	228	125	42	4

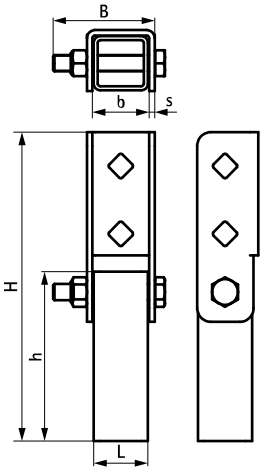

Complementary

307 BIS Yeti® 335 Frame Set
304 BIS Yeti® 335 Support System (BUP1000)
207 BIS RapidStrut® Fixing Rail (BUP1000)

EN-SG 02/2022- Subject to modifications

BIS Yeti® 335 Frame Set

(I 04 15)

for Rooftop Installations



6768 5 501



6768 5 502



Features and Benefits

- complete set for supporting installation appliances on flat roofs
- suitable for wide range of commonly used airco's, ventilation units, etc.
- with non-slip anti-vibration mat
- predefined load capacity: calculation not necessary
- device can't be heavier than 150 kg
- top of device can't be higher than 1.2 m over the roof level
- mouldings made of WPC, a composite of recycled plastic and wood fibre
- surface protection:
  - product is part of the BIS UltraProtect® 1000 system
  - suitable for in- and outdoor applications
  - stands min. 1,000 hours salt spray test (max. 5% red rust) according to ISO 9227
- sets meet the requirements of DIN 18531-1
- UV-resistance according to EN ISO 16474-3:2014-02
- Part No. 67685501: consisting of:
  - 4 x BIS Yeti® 335 including non-slip anti-vibration mat (made of rubber)
  - 2 x 1.5 m BIS RapidStrut® Fixing Rail DS 5 (BUP1000), pre-assembled with vertical legs of 0.5 m on both sides, ready to just plug in the BIS Yeti® 335
  - 2 x 1 m BIS RapidStrut® Fixing Rail DS 5 (BUP1000), as a cross-connection to the frame. Connecting elements are already pre-installed on the frame
  - all connecting elements, rail end caps and bolts are included and most are pre-assembled
- Part No. 67685502: consisting of:
  - 6 x BIS Yeti® 335 including non-slip anti-vibration mat (made of rubber)
  - 2 x 2 m and 4 x 1.5 m pre-cutted BIS RapidStrut® Fixing Rail DS 5 (BUP1000), for use as longitudinal and transverse rails
  - 6 x 0.5 m BIS RapidStrut® Fixing Rail DS 5 (BUP1000), for use as vertical legs with pre-assembled connecting elements
  - all connecting elements, rail end caps and bolts are included and most are pre-assembled

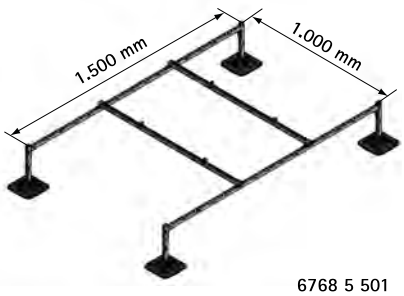

6768 5 501

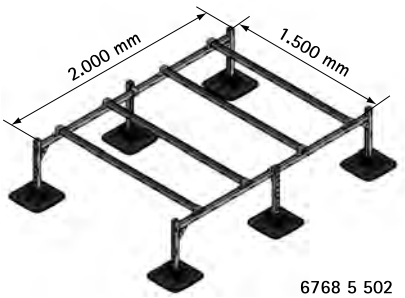

6768 5 502

Part No.	Model	Pack 1
67685501	BIS Yeti® 335 for 1 installation appliance	1
67685502	BIS Yeti® 335 for 2 installation appliances	1

Before mounting, the roof load capacity has to be confirmed by a structural engineer. If changes to the mounting parameters is necessary then please contact Walraven Technical Department.

BIS Yeti® 130 Support System

(I 04 50)

for Light Rooftop Installations









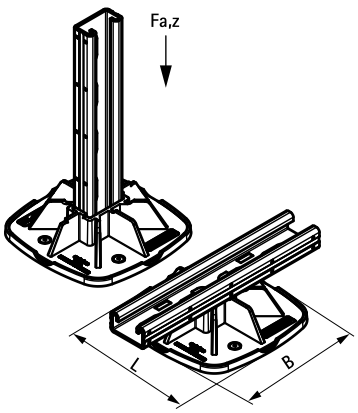

Features and Benefits

- modular supporting system for light rooftop installations
- for horizontal and vertical applications
- flexible and cost-effective solution for pipes, cable-trays, air duct channels etc.
- with non-slip anti-vibration mat
- with unique click-mechanism for quick and safe installation
- mouldings made of WPC, a composite of recycled plastic and wood fibre
- plastic components made from 100% recycled material
- resistant to UV and chemical influences
- UV-resistance according to EN ISO 16474-3:2014-02

Part No.	Model	L	B (mm)	For Rail	$F_{a,z}$ (N)	Pack 1
67685130	Including non-slip anti-vibration mat	130 mm	130	Strut 41x21	2,500	10

For a detailed calculation and for support how to spread the load please contact Walraven Technical Support.
In cases where a foot is used in roof applications, the installer is obliged to verify maximum load capacity of roof before installation.

Complementary

311 BIS Yeti® Triplex Separation Layer

EN-SG 02/2022- Subject to modifications

BIS Yeti® 130 Frame Set (BUP1000)

(I 04 52)

for Light Rooftop Installations





Features and Benefits

- complete set for supporting installation appliances on flat roofs
- suitable for wide range of commonly used airco's, ventilation units, etc.
- with non-slip anti-vibration mat
- predefined load capacity (max. 1,500 N), calculation not necessary
- top of device can't be higher than 1.2 m over the roof level
- mouldings made of WPC, a composite of recycled plastic and wood fibre
- plastic components made from 100% recycled material
- resistant to UV and chemical influences
- surface protection:
  - product is part of the BIS UltraProtect® 1000 system
  - suitable for in- and outdoor applications
  - stands min. 1,000 hours salt spray test (max. 5% red rust) according to ISO 9227
- sound reduction
- UV-resistance according to EN ISO 16474-3:2014-02
- Part No. 67685532 consisting of:
  - 4 x BIS Yeti® 130 including non-slip anti-vibration mat (made of rubber)
  - 2 x 1.0 m BIS RapidStrut® Fixing Rail 41x21 (BUP1000), cut to length and deburred
  - 2 x 0.6 m BIS RapidStrut® Fixing Rail 41x21 (BUP1000), cut to length and deburred
  - 4 x 0.4 m BIS RapidStrut® Fixing Rail 41x21 (BUP1000), cut to length and deburred, as vertical legs, ready to just plug in the BIS Yeti® 130
  - all connecting elements, rail end caps and bolts are included and most are pre-assembled

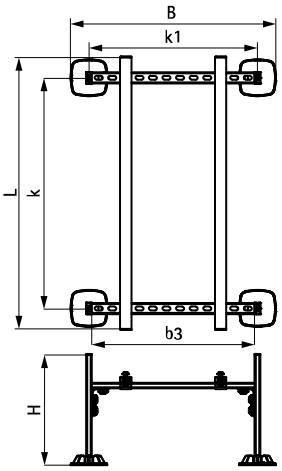

Part No.	Model	L	B (mm)	b3 (mm)	H (mm)	k (mm)	k1 (mm)	$F_{a,z}$ (N)	Pack 1
67685532	BIS Yeti® 130 Frame Set for 1 installation appliance	1,000 mm	751	600	400	850	621	1,500	1

Maximum load ($F_{a,z}$) depends on the load capacity of the trapezium shaped roofing sheet. Before mounting, the roof load capacity has to be confirmed by a structural engineer.
If changes to the mounting parameters is necessary then please contact Walraven Technical Department.

Alternative
307 BIS Yeti® 335 Frame Set

BIS Yeti® 130 Cable Tray Set (BUP1000)

(I 04 54)

for installation of cable trays on roofs



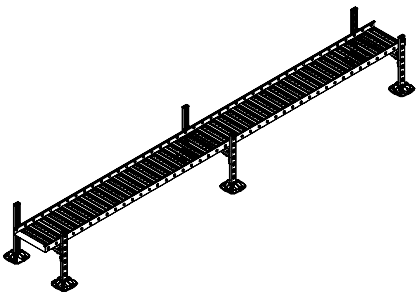

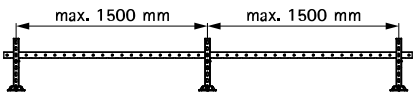

Features and Benefits

- complete set for cable tray installations on the roof
- flexible and cost-effective solution
- also possible to use for pipes or small air duct channels
- with non-slip anti-vibration mat
- predefined load capacity: calculation not necessary
- mouldings made of WPC, a composite of recycled plastic and wood fibre
- plastic components made from 100% recycled material
- resistant to UV and chemical influences
- surface protection:
  - product is part of the BIS UltraProtect® 1000 system
  - suitable for in- and outdoor applications
  - stands min. 1,000 hours salt spray test (max. 5% red rust) according to ISO 9227
- sound reduction
- UV-resistance according to EN ISO 16474-3:2014-02
- Part No. 67685534 consisting of:
  - 6 x BIS Yeti® 130 including non-slip anti-vibration mat (made of rubber)
  - 9 x 0.4 m BIS RapidStrut® Fixing Rail 41x21 (BUP1000), cut to length and deburred
  - 6 x BIS RapidStrut® 90° Connector, pre-assembled ready to use
  - 6 x BIS RapidStrut® Endcaps

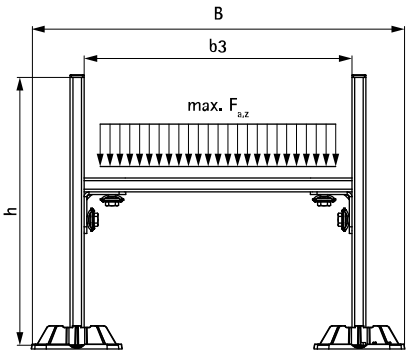

Part No.	Model	B (mm)	b3 (mm)	h (mm)	$F_{a,z}$ (N)	Pack 1
67685534	BIS Yeti® 130 Cable Tray Set 400	551	400	400	1,500	1

Maximum load ($F_{a,z}$) depends on the load capacity of the trapezium shaped roofing sheet. Before mounting, the roof load capacity has to be confirmed by a structural engineer.
If changes to the mounting parameters is necessary then please contact Walraven Technical Department.

Complementary

218 BIS Strut T-shape Base Plate (BUP1000)
207 BIS RapidStrut® Fixing Rail (BUP1000)
251 BIS Strut Connector 90° (BUP1000)

EN-SG 02/2022- Subject to modifications

BIS Yeti® Triplex Separation Layer

(I 04 55)

for Rooftop Installations

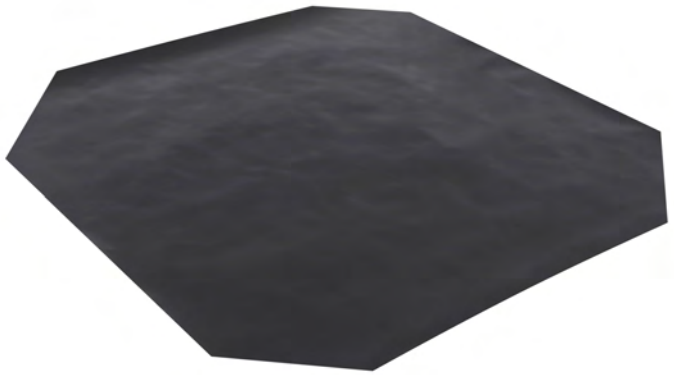

Features and Benefits

- 3-layer release and protection layer for use between BIS Yeti® mounting foot and PVC roof
- size 350x350 by ¼ pitch also suitable for BIS Yeti® 130
- high coefficient of static friction (between 0.400 and 0.500 depending on roof pitch and dry / wet condition)
- use on both sides possible
- material: HDPE film (black), aluminum foil, PET film (transparent)

Part No.	L	B (mm)	Pack 1
67685403	350 mm	350	10
67685405	500 mm	500	10

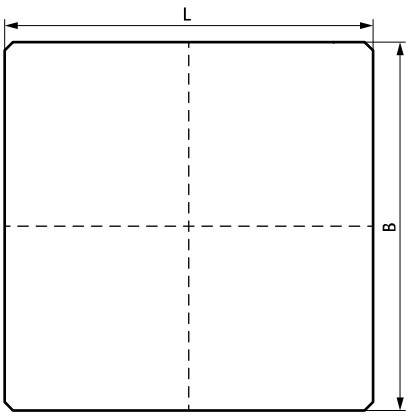

Complementary

302 BIS Yeti® 480 Support System (BUP1000)
304 BIS Yeti® 335 Support System (BUP1000)
307 BIS Yeti® 335 Frame Set

EN-SG 02/2022- Subject to modifications

BIS Yeti® Service Deck Grid

(I 04 16)

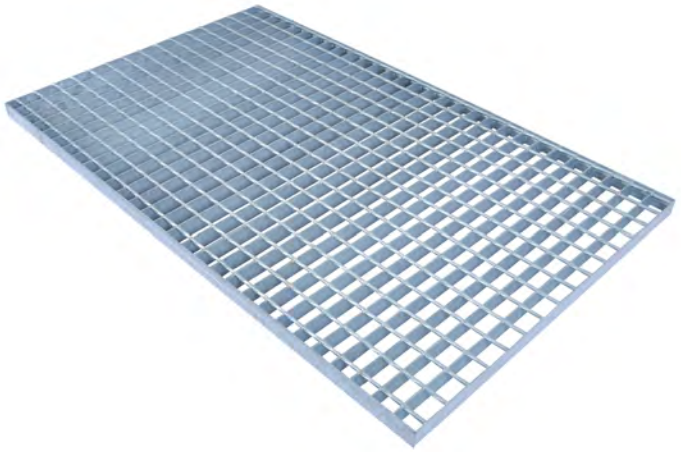



Features and Benefits

- complete range of gratings and stair treads to build service walkways
- in combination with BIS Yeti® and BIS RapidStrut® a complete system for outside use
- on request we offer engineered customized solutions as set
- material: steel
- hot dip galvanized

Part No.	Model	L	B (mm)	Pack 1	
67695100	Grid SP (30x2)	500 mm	1,000	1	*
67696100	Grid SP (30x2)	600 mm	1,000	1	*
67698100	Grid SP (30x2)	800 mm	1,000	1	*
67691050	Grid SP (30x2)	1,000 mm	500	1	*
67691080	Grid SP (30x2)	1,000 mm	800	1	*
67691100	Grid SP (30x2)	1,000 mm	1,000	1	*
67691120	Grid RR (33x33)	1,000 mm	1,200	1	**
67692100	Grid SP (30x2)	1,200 mm	1,000	1	*
67695010	Grid SP (30x2)	1,500 mm	1,000	1	*
67695015	Grid RR (33x33)	1,500 mm	1,500	1	**

** L = flat steel direction; B = rod direction (Type SP)*
*** L = flat steel direction; B = flat steel direction (Type RR)*

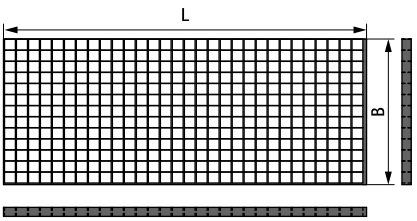

Complementary

313 BIS Yeti® Service Deck Step
314 Fastening Set for Grids
302 BIS Yeti® 480 Support System (BUP1000)

Complementary

205 BIS RapidStrut® Fixing Rail DS 5 (BUP1000)
207 BIS RapidStrut® Fixing Rail (BUP1000)

EN-SG 02/2022- Subject to modifications

BIS Yeti® Service Deck Step

(I 04 17)





Features and Benefits

- complete range of gratings and stair treads to build service walkways
- in combination with BIS Yeti® and BIS RapidStrut® a complete system for outside use
- on request we offer engineered customized solutions as set
- material: steel
- hot dip galvanized

Part No.	Model	L	B (mm)	Pack 1
67690060	Step TSP 3-30	600 mm	240	1
67690080	Step TSP 3-30	800 mm	240	1
67690100	Step TSP 3-30	1,000 mm	240	1
67690130	Step TSP 3-30	1,000 mm	305	1
L =flat steel direction; B=rod direction (Type TSP)				

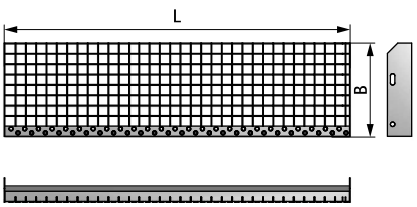

Complementary

312 BIS Yeti® Service Deck Grid
314 Fastening Set for Grids
302 BIS Yeti® 480 Support System (BUP1000)

Complementary

205 BIS RapidStrut® Fixing Rail DS 5 (BUP1000)
207 BIS RapidStrut® Fixing Rail (BUP1000)

EN-SG 02/2022- Subject to modifications

Fastening Set for Grids

(I 04 18)



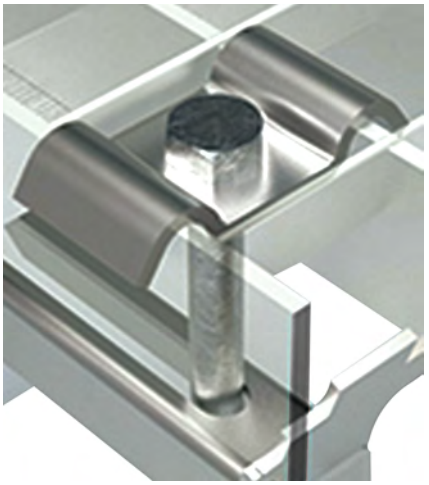

Features and Benefits

- set contains 4 top plates, 4 screws and 4 slidenuts
- W-shaped top plate for optimal fit to grids and flat top surface
- material: steel
- hot dip galvanized

Part No.	G	L	B (mm)	H (mm)	Set	Pack 1
67699000	M8	21 mm	60	68	4 pcs.	1

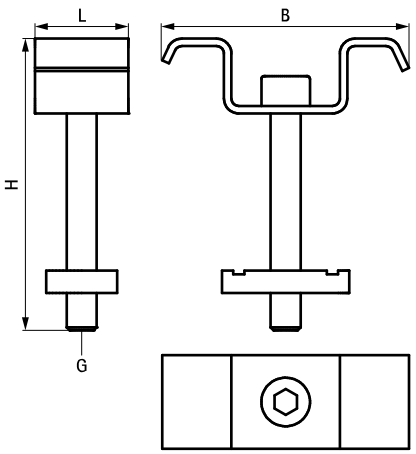

Complementary

312 BIS Yeti® Service Deck Grid
313 BIS Yeti® Service Deck Step

EN-SG 02/2022- Subject to modifications

Rooftop Anchor

(I 04 19)

for Rooftop Installations



Features and Benefits

- to connect rooftop installations with the building structure
- as fixpoint construction when required
- the inside of the mounting base must be filled with weatherproof expanding foam on site to avoid thermal bridges
- 67685410 to be used in combination with BIS RapidStrut® Base Plates (665885400 / 66583804)
- 67685411 to be used in combination with Maxx Base Plates (6581820 / 6581821)
- material: steel S235JR
- hot dip galvanized

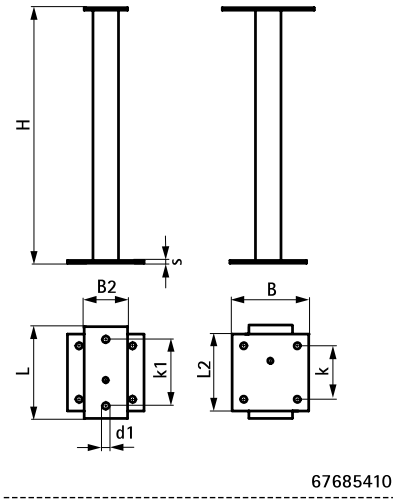

67685410

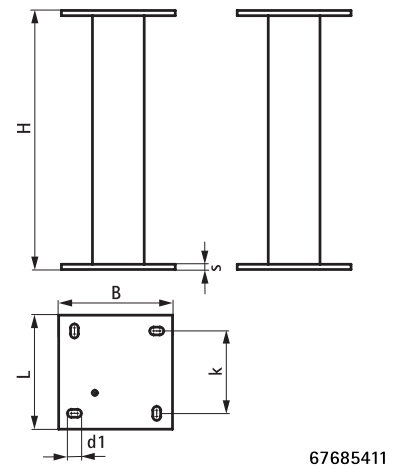

67685411

Part No.	L	L2 (mm)	B (mm)	B2 (mm)	H (mm)	s (mm)	d1 (mm)	k (mm)	k1 (mm)	From Rail
67685410	180 mm	150 mm	150	85	500	5	13	105	130	50x50x4
67685411	220 mm	-	220	-	500	10	27x15	159	-	100x100x4

Complementary

216 BIS RapidStrut® Base Plate G2 (BUP1000)
207 BIS RapidStrut® Fixing Rail (BUP1000)
302 BIS Yeti® 480 Support System (BUP1000)

Complementary

304 BIS Yeti® 335 Support System (BUP1000)

BIS Ursus Foot Support System (BUP1000)

(I 04 20)

for Rooftop Installations





Features and Benefits

- for supporting small pipework systems, ductwork runs and cable trays
- to support climate installations, walkways on flat roofs, etc.
- does not penetrate the waterproof membrane
- material: vulcanized rubber, black; Strut Rail made of steel 1.0242
- UV resistant
- Strut Rail: surface protection:
  - product is part of the BIS UltraProtect® 1000 system
  - suitable for in- and outdoor applications
  - stands min. 1,000 hours salt spray test (max. 5% red rust) according to ISO 9227

Part No.	Model	L	B (mm)	H (mm)	$F_{a,z}$ (N)	Pack 1
67687250	Horizontal, including rail	250 mm	130	50	1,000	1
67687400	Horizontal, including rail	400 mm	130	50	2,000	1
67687601	Horizontal, including rail	600 mm	200	50	3,000	1

For a detailed calculation and for support how to spread the load please contact Walraven Technical Support.
In cases where a foot is used in roof applications, the installer is obliged to verify maximum load capacity of roof before installation.

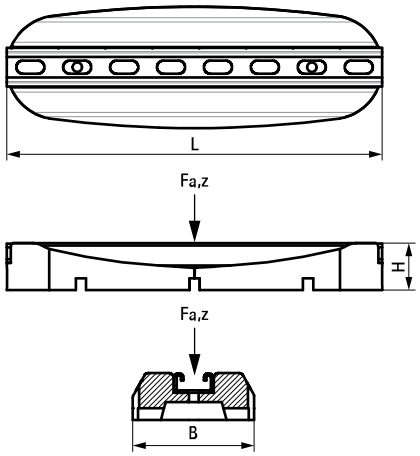

EN-SG 02/2022- Subject to modifications

BIS Fixing Brackets - 755 / 756

(I 08 30)



790 4 150



790 4 0XX

Features and Benefits

- for fixing solar panels to Strut rail
- material: steel
- surface treatment: Dacromet

Part No.	Model	L	Pack 1
7904150	Middle Clamp	35 - 50 mm	20
7904035	End Clamp	35 mm	20
7904040	End Clamp	40 mm	20
7904045	End Clamp	45 mm	20
7904050	End Clamp	50 mm	20

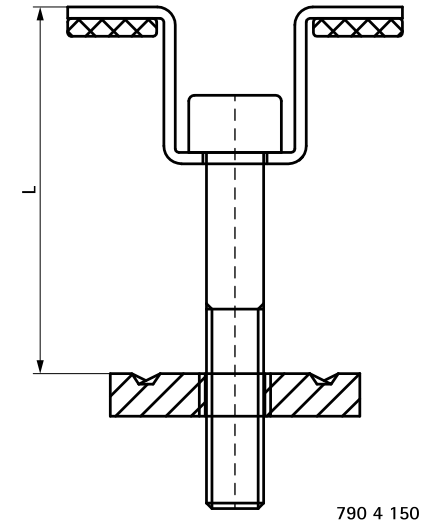

790 4 150

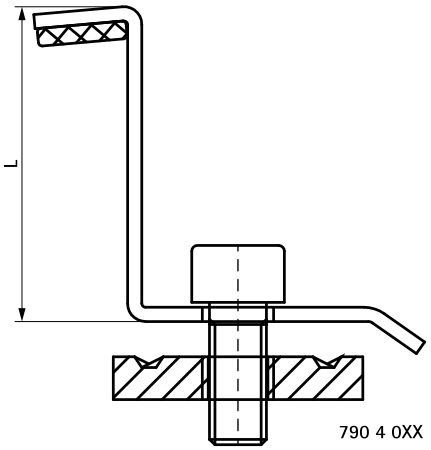

790 4 0XX

J BIS Electrical Fixings



Britclips® – Beam Clips

Britclips® Tiger 324
Britclips® FC 325
Britclips® FC TB 326
Britclips® FC ICC 327
Britclips® FC M6 x 9 328
Britclips® FCHR M6 x 11 329
Britclips® FCR M6 330
Britclips® FC PD 331
Britclips® FC ICT 332



Britclips® – Universal Beam Clips

Britclips® FU 333
Britclips® FU M6 x 9 334
Britclips® FU ICC 335



Britclips® – Screw-on Beam Clamps

Britclips® SB 336
Britclips® SB CT 337
Britclips® SB ICCS 338



Britclips® – Push-on Clips

Britclips® GAM8 339
Britclips® PC Flange 340
Britclips® PC Flange 341
Britclips® PCD 342
Britclips® PCF 343
Britclips® PCM 344



Britclips® – Threaded Rod Clips

Britclips® TRC 345
Britclips® TR 346



Britclips® – Roof Deck Hangers

Britclips® RD 347
Britclips® RD ICT 348
Britclips® Rapid RTB 349



Britclips® – Acoustic Ceiling Clips

Britclips® ACC15 350
Britclips® ACC25 351
Britclips® ACN 352
Britclips® ACO 353
Britclips® ACT 354
Britclips® ACHW / ACHZ 355
Britclips® ACS 356
Britclips® T Bar Angle Bracket 357



Britclips® – Purlin Hangers

Britclips® PHV 358
Britclips® PHV ICT 359



Britclips® – Composite Deck Hangers

Britclips® WN 360



Britclips® – Miscellaneous

BIS LYRE - LY 361
Britclips® RSWB 362

EN-SG 02/2022- Subject to modifications

J BIS Electrical Fixings



BIS Cablefix

BIS Twistfix **363**
BIS Fixing Rail for BIS Twistfix **364**
BIS Fixing Rail for BIS Cablefix **365**



BIS STARLOCK, Cable Ties

BIS STARLOCK I Cable Bind System **366**
BIS STARLOCK II Cable Bind System **367**
BIS STARLOCK Consumables **368**
BIS STARLOCK Parts **369**
BIS Cable Tie **370**
BIS Basefix **371**
BIS Fixing Accessory for Cable Tie **372**



BIS Nail Clips

BIS Nail Clip (White) **373**
BIS Nail Clip (Black) **374**

EN-SG 02/2022- Subject to modifications

Application Britclips® Tiger, FC, FU, SB, PC

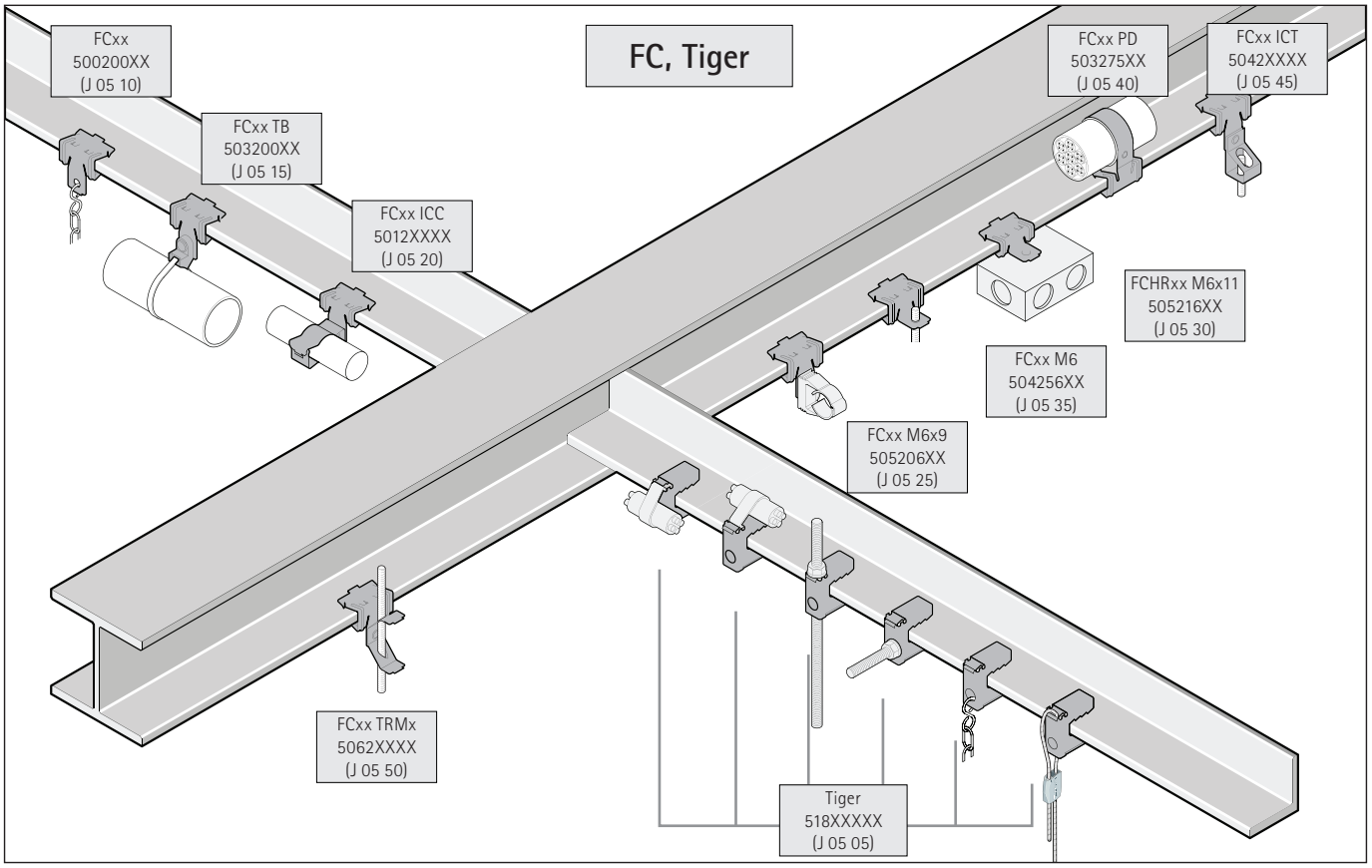

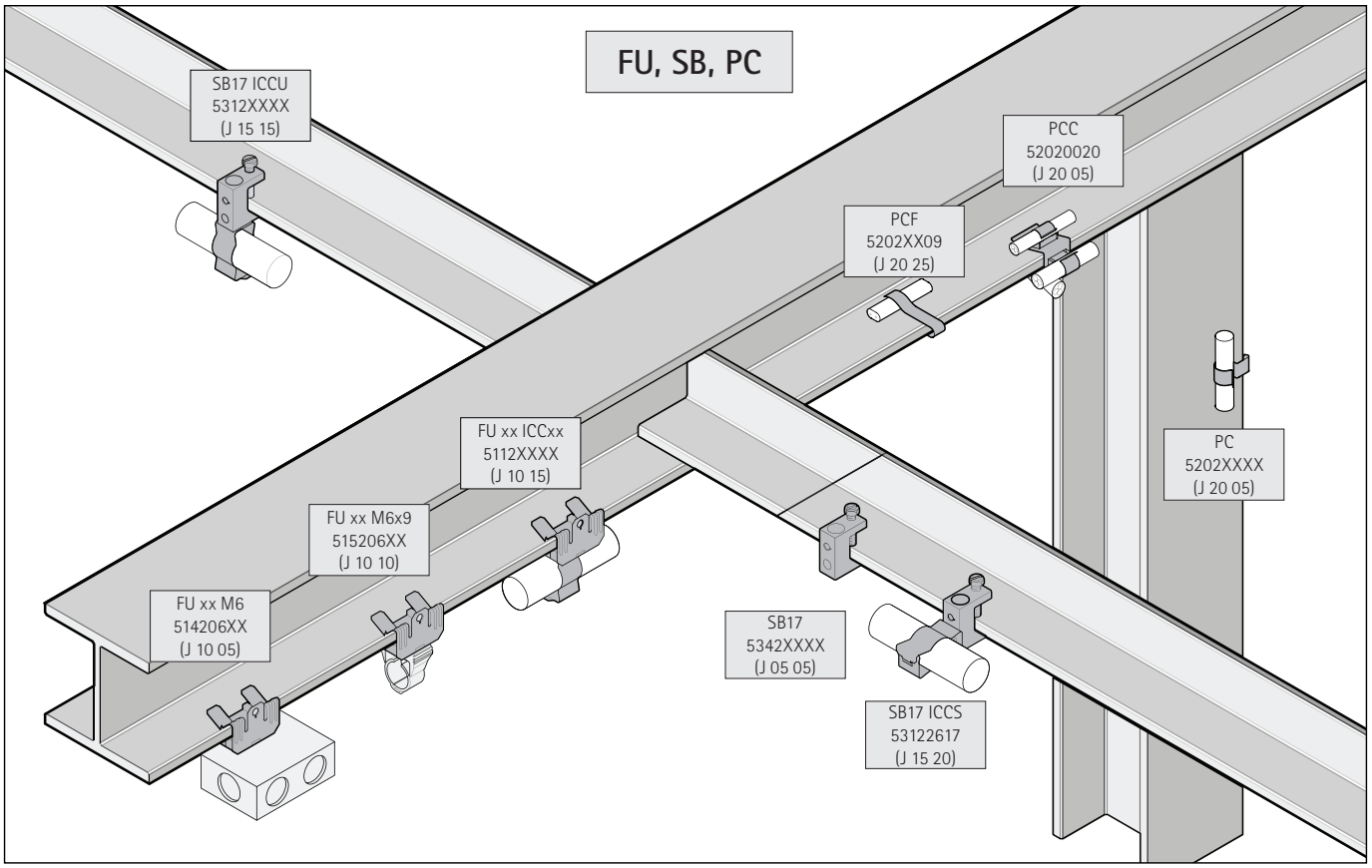

Application Britclips® RD, RTB, TR, CD

RD, RTB

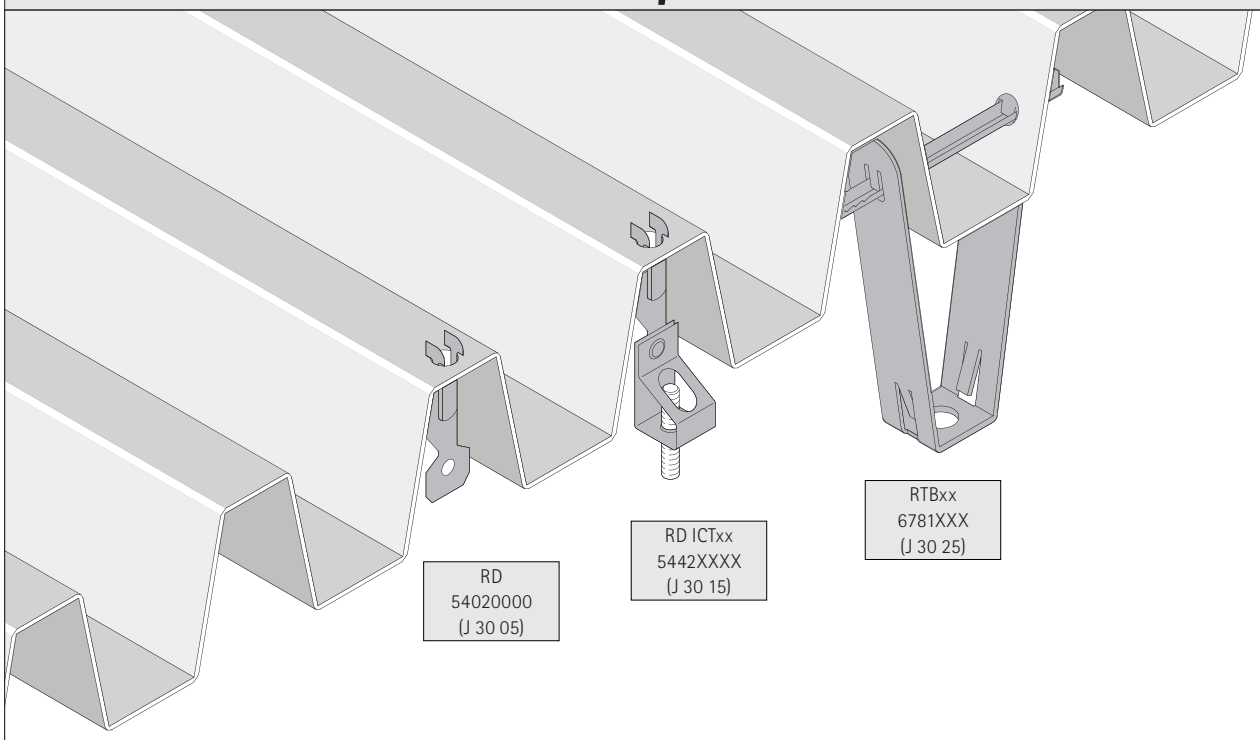

TR

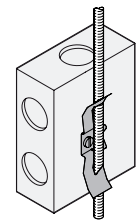

WN

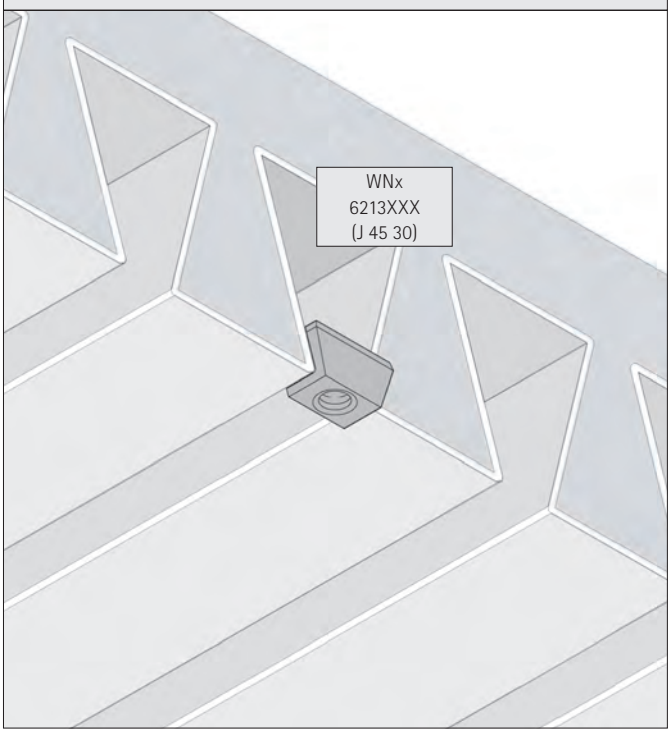

EN-SG 02/2022- Subject to modifications

Application Britclips® PH, AC, PHV

Britclips® PH

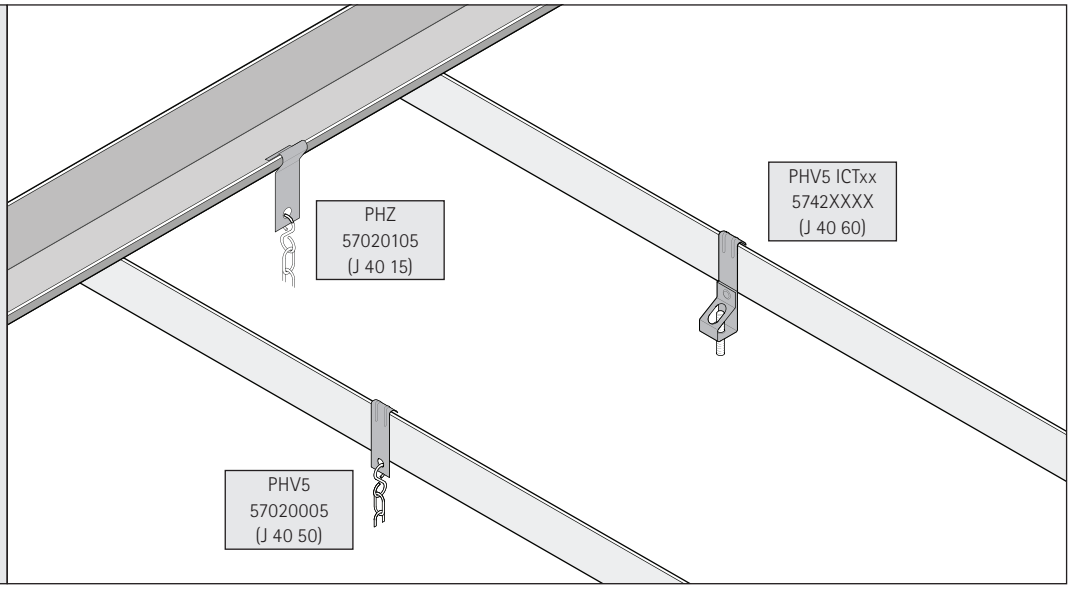

Britclips® AC

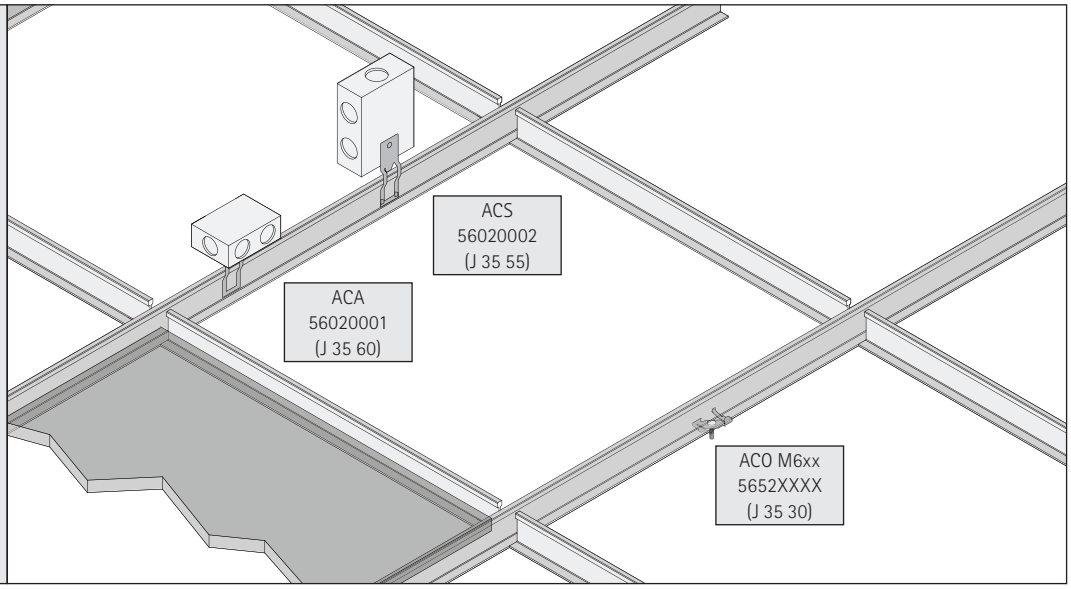

Britclips® Tiger

(J 05 05)

for flange 2 - 24 mm





Features and Benefits

- multi-purpose clip
- for static loads, single use and non relocatable
- to hammer on or by hand; always the eye opposite to the load
- also suitable for outside use
- with hole to receive steel cable, S-Hook, cable tie, threaded rod (M6 or M8), etc.
- material: spring steel (type C67S according to EN10132)
- surface treatment: Magni coated, 2 layers (600 hours resistant to salt spray)
- incl. Britclips® ICP Thread plate, for wood screws from 4.0 to 4.5 mm (see J 50 07)

CSTB
le futur en construction

Report ED 05 / 022

Part No.	Code	A (mm)	B (mm)	H (mm)	d1 (mm)	d2 (mm)	$F_{a,z}$ (N)	CSTB	Pack 1	Pack 2
51803208	Tiger 8R	2 - 8	30	30	8.0	6.6	1,200	CSTB	25	250
51803216	Tiger 16R	8 - 16	32	38	8.0	6.6	1,200	CSTB	25	250
51805216	Tiger 16	8 - 16	32	38	8.0	6.6	1,200	CSTB	100	500
51804224	Tiger 24	16 - 24	42	48	8.0	6.6	1,200	CSTB	50	250

For use with static loads only.
Max. allowed load ($F_{a,z}$) with M6 or M8 threaded rod vertical (safety margin 1:4).
Externally tested by CSTB.

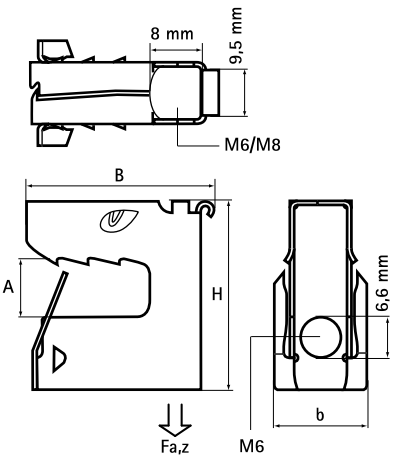

Complementary

446 BIS Stud Bolt
370 BIS Cable Tie
441 BIS S-Hook

Complementary

448 BIS Threaded Rod
439 BIS Chain (DIN 5685)

EN-SG 02/2022- Subject to modifications

Britclips® FC

(J 05 10)

for flange 2 - 30 mm



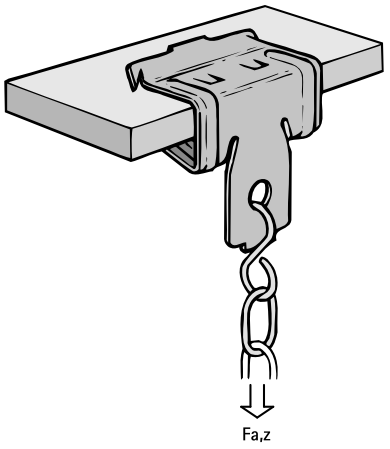

Features and Benefits

- for a solid fixing to steel construction without the need for welding or drilling
- with fixing hole (Ø 7 mm) to fix S-hook, bolt/nut, etc.
- material: spring steel (type C67S according to EN10132)
- surface treatment: Delta-Tone 9000 (480 hours)

Part No.	Code	A (mm)	h (mm)	d1 (mm)	$F_{a,z}$ (N)	Pack 1
50020004	FC4	2 - 4	27	7	450	100
50020009	FC8	4 - 8	39	7	950	100
50020059	FC8-B	4 - 8	39	7	950	25
50020016	FC14	8 - 14	41	7	950	100
50020066	FC14-B	8 - 14	41	7	950	25
50020020	FC20	14 - 20	47	7	950	100
50020070	FC20-B	14 - 20	47	7	950	25
50020030	FC28	20 - 28	56	7	950	100

Articles with codes ending in a '-B' are packed in a plastic bag.
For use with static loads only.

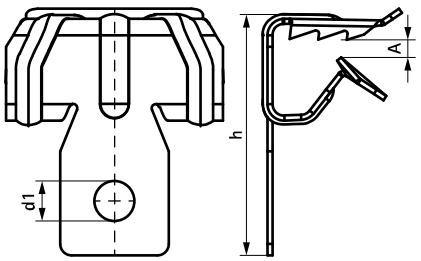

Complementary

441 BIS S-Hook
439 BIS Chain (DIN 5685)

Alternative

324 Britclips® Tiger

EN-SG 02/2022- Subject to modifications

Britclips® FC TB

(J 05 15)

for flange 2 - 30 mm



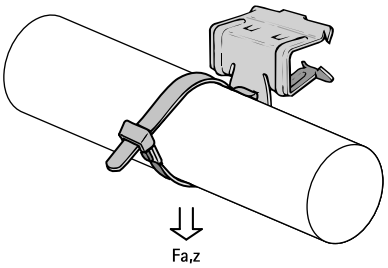

Features and Benefits

- for a solid fixing to steel construction without the need for welding or drilling
- with saddle for cable tie attachment (up to width 7.6 mm)
- material: bracket made of spring steel (type C67S according to EN10132); tie-wrap clip of PA (polyamide), black
- surface treatment: Delta-Tone 9000 (480 hours)

Part No.	Code	A (mm)	h (mm)	$F_{a,z}$ (N)	Pack 1	Pack 2
50320004	FC4 TB	2 - 4	27	220	100	400
50320009	FC8 TB	4 - 8	39	220	100	400
50320016	FC14 TB	8 - 14	41	220	100	400
50320020	FC20 TB	14 - 20	47	220	100	400
50320030	FC28 TB	20 - 28	50	220	100	400
50320066	FC14 TB-B	8 - 14	41	220	25	250
For use with static loads only.						

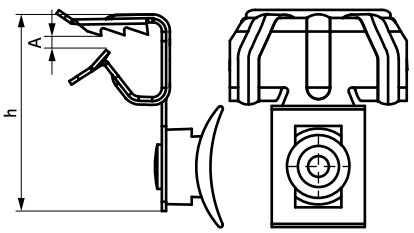

Complementary
370 BIS Cable Tie

Alternative
324 Britclips® Tiger

EN-SG 02/2022- Subject to modifications

Britclips® FC ICC

(J 05 20)

for flange 2 - 30 mm



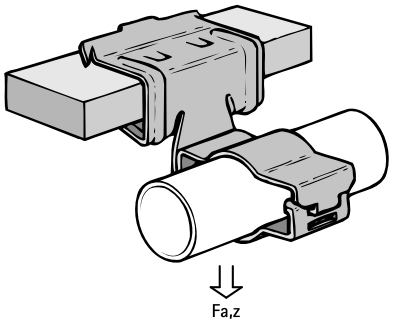

Features and Benefits

- for a solid fixing to steel construction without the need for welding or drilling
- suitable for pipe or cable fixing horizontal, vertical or crossed with respect to the flange
- conduit clip swivels 360°
- conduit clip with jaw locking (use pliers to lock)
- material: spring steel (type C67S according to EN10132)
- surface treatment: Delta-Tone 9000 (480 hours)

Part No.	Code	D (mm)	A (mm)	h (mm)	$F_{a,z}$ (N)	Pack 1	Pack 2
50121709	FC8 ICC17	11 - 17	4 - 8	39	250	50	200
50121716	FC14 ICC17	11 - 17	8 - 14	41	250	50	200
50121720	FC20 ICC17	11 - 17	14 - 20	47	250	50	200
50121730	FC28 ICC17	11 - 17	20 - 28	56	250	50	200
50122404	FC4 ICC24	18 - 24	2 - 4	27	450	50	200
50122409	FC8 ICC24	18 - 24	4 - 8	39	450	50	200
50122416	FC14 ICC24	18 - 24	8 - 14	41	450	50	200
50122420	FC20 ICC24	18 - 24	14 - 20	47	450	50	200
50122430	FC28 ICC24	18 - 24	20 - 28	56	450	50	200
50122604	FC4 ICC26	22 - 26	2 - 4	27	450	50	200
50122609	FC8 ICC26	22 - 26	4 - 8	39	450	50	200
50122616	FC14 ICC26	22 - 26	8 - 14	41	450	50	200
50122620	FC20 ICC26	22 - 26	14 - 20	47	450	50	200
50122630	FC28 ICC26	22 - 26	20 - 28	56	450	50	200
50123209	FC8 ICC32	30 - 32	4 - 8	39	450	50	200
50123216	FC14 ICC32	30 - 32	8 - 14	41	450	50	200
50123220	FC20 ICC32	30 - 32	14 - 20	47	450	50	200
50123230	FC28 ICC32	30 - 32	20 - 28	56	450	50	200
50124009	FC8 ICC40	36 - 40	4 - 8	39	450	50	200
50124016	FC14 ICC40	36 - 40	8 - 14	41	450	50	200
50124020	FC20 ICC40	36 - 40	14 - 20	47	450	25	100
50124030	FC28 ICC40	36 - 40	20 - 28	56	450	50	200

For use with static loads only.

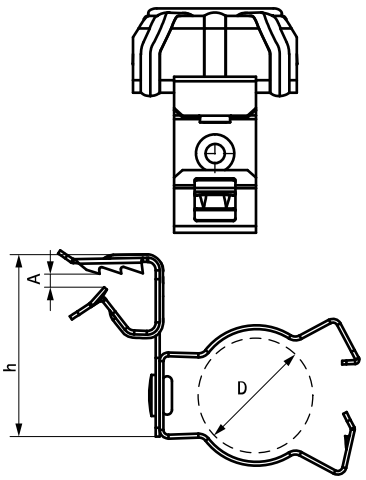

Britclips® FC M6 x 9

(J 05 25)

for flange 2 - 30 mm



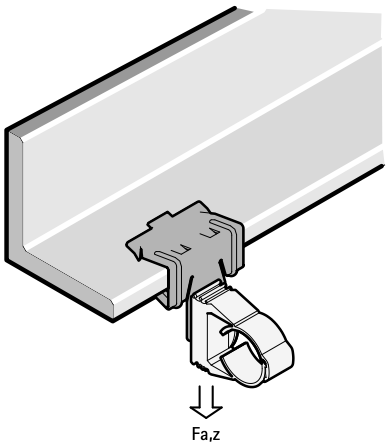

Features and Benefits

- for a solid fixing to steel construction without the need for welding or drilling
- with stud bolt M6 x 9 mm for fixing of clamp, conduit junction box, etc.
- material: spring steel (type C67S according to EN10132)
- surface treatment: Delta-Tone 9000 (480 hours)

Part No.	Code	A (mm)	h (mm)	$F_{a,z}$ (N)	Pack 1	Pack 2
50520604	FC4 M6x9	2 - 4	27	450	100	500
50520609	FC8 M6x9	4 - 8	39	450	100	500
50520616	FC14 M6x9	8 - 14	41	450	100	400
50520620	FC20 M6x9	14 - 20	47	450	100	400
50520630	FC28 M6x9	20 - 28	50	450	100	400
For use with static loads only.						

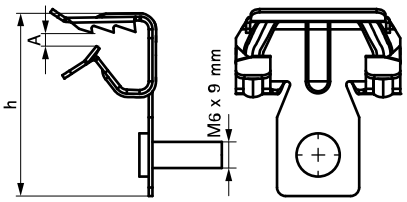

Complementary

82 starQuick® Clamp - M6 (Grey)

EN-SG 02/2022- Subject to modifications

Britclips® FCHR M6 x 11

(J 05 30)

for flange 5 - 16 mm



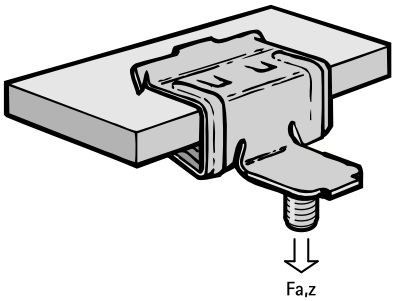

Features and Benefits

- for a solid fixing to steel construction without the need for welding or drilling
- with stud bolt M6 x 11 mm for fixing of clamp, conduit junction box, etc.
- material: spring steel (type C67S according to EN10132)
- surface treatment: Delta-Tone 9000 (480 hours)

Part No.	Code	A (mm)	$F_{a,z}$ (N)	Pack 1	Pack 2
50521616	FCHR14 M6x11	8 - 14	200	100	400
For use with static loads only.					

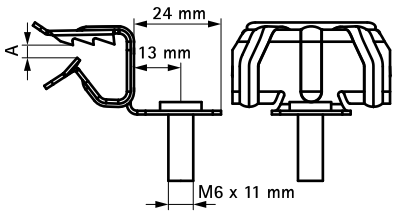

Complementary

77 starQuick® Clamp (Grey)

Britclips® FCR M6

(J 05 35)

for flange 5 - 16 mm



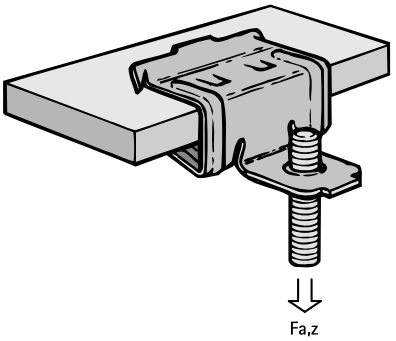

Features and Benefits

- for a solid fixing to steel construction without the need for welding or drilling
- with female thread M6
- material: spring steel (type C67S according to EN10132)
- surface treatment: Delta-Tone 9000 (480 hours)

Part No.	Code	A (mm)	R	$F_{a,z}$ (N)	Pack 1	Pack 2
50425609	FCR8 M6	4 - 8	M6	200	100	400
50425616	FCR14 M6	8 - 14	M6	200	100	400
For use with static loads only.						

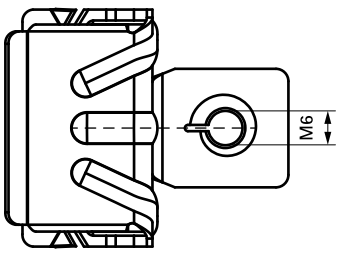

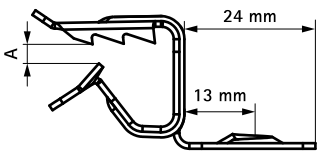

Complementary

446 BIS Stud Bolt
448 BIS Threaded Rod

EN-SG 02/2022- Subject to modifications

Britclips® FC PD

(J 05 40)

for flange 2 - 30 mm



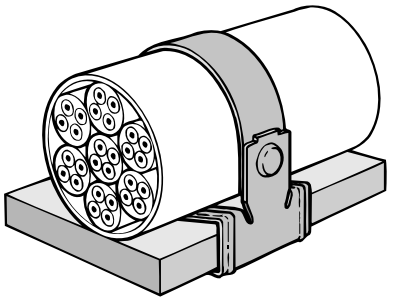

Features and Benefits

- for a solid fixing to steel construction without the need for welding or drilling
- with flexible strip to support cables
- material: spring steel (type C67S according to EN10132)
- surface treatment: Delta-Tone 9000 (480 hours)

Part No.	Code	A (mm)	Pack 1	Pack 2
50327504	FC4 PD	2 - 4	100	400
50327509	FC8 PD	4 - 8	100	400
50327516	FC14 PD	8 - 14	100	400
50327520	FC20 PD	14 - 20	100	400
50327530	FC28 PD	20 - 28	100	400
50327566	FC14 PD-B	8 - 14	25	250

For use with static loads only.

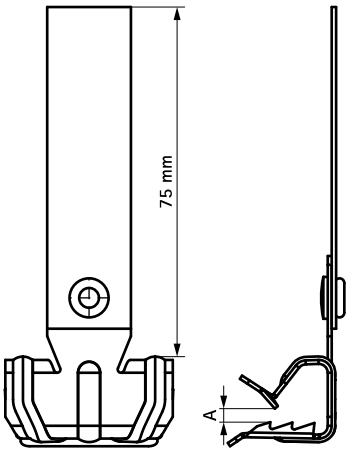

Britclips® FC ICT

(J 05 45)

for flange 2 - 30 mm



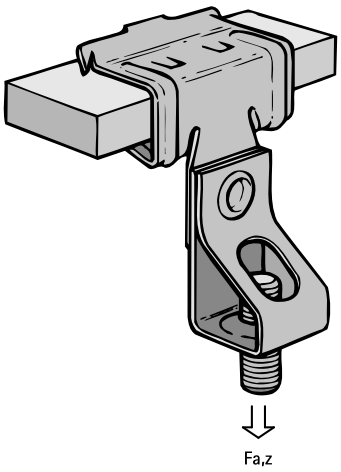

Features and Benefits

- for a solid fixing to steel construction without the need for welding or drilling
- with threaded rod holder (rod height adjustable by screwing)
- material: spring steel (type C67S according to EN10132)
- surface treatment: Delta-Tone 9000 (480 hours)

Part No.	Code	A (mm)	R	H (mm)	$F_{a,z}$ (N)	Pack 1	Pack 2
50420609	FC8 ICTM6	4 - 8	M6	51	650	100	400
50420809	FC8 ICTM8	4 - 8	M8	51	700	100	400
50420616	FC14 ICTM6	8 - 14	M6	56	650	100	400
50420816	FC14 ICTM8	8 - 14	M8	56	700	100	400
50420620	FC20 ICTM6	14 - 20	M6	63	650	100	400
For use with static loads only.							

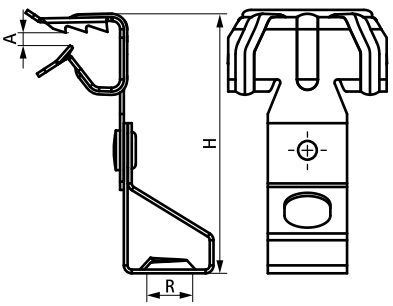

Complementary

446 BIS Stud Bolt
448 BIS Threaded Rod

Alternative

324 Britclips® Tiger

EN-SG 02/2022- Subject to modifications

Britclips® FU

(J 10 05)

for flange 3 - 20 mm



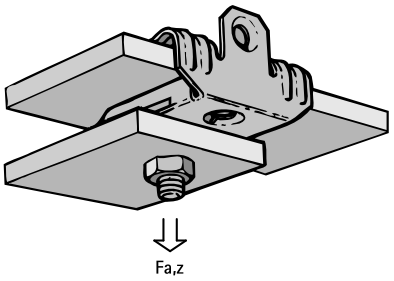

Features and Benefits

- for a solid fixing under flanges without welding or drilling
- suitable for horizontal and vertical flanges
- with female thread M6
- material: spring steel (type C67S according to EN10132)
- surface treatment: Delta-Tone 9000 (480 hours)

Part No.	Code	A (mm)	R	$F_{a,z}$ (N)	Pack 1	Pack 2
51420607	FU7 M6	3.0 - 7.0	M6	450	100	400
51420613	FU12,5 M6	8.0 - 12.5	M6	450	100	400
51420620	FU20 M6	14.0 - 20.0	M6	450	100	400
51420663	FU12,5 M6-B	8.0 - 12.5	M6	450	25	250
For use with static loads only.						

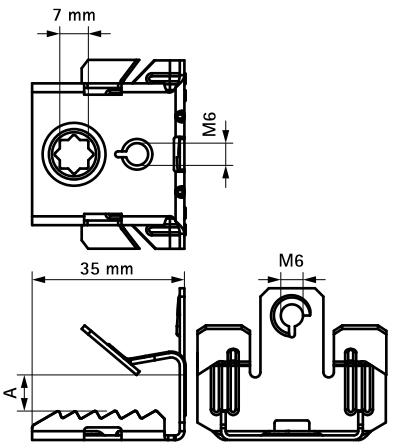

Complementary

446 BIS Stud Bolt
370 BIS Cable Tie
448 BIS Threaded Rod

Alternative

324 Britclips® Tiger

Britclips® FU M6 x 9

(J 10 10)

for flange 3 - 20 mm



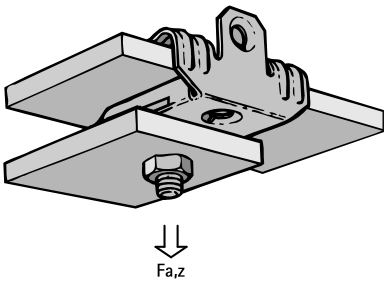

Features and Benefits

- for a solid fixing under flanges without welding or drilling
- suitable for horizontal and vertical flanges
- with stud bolt M6 x 9 mm for fixing of clamp, conduit junction box, etc.
- material: spring steel (type C67S according to EN10132)
- surface treatment: Delta-Tone 9000 (480 hours)

Part No.	Code	A (mm)	R	$F_{a,z}$ (N)	Pack 1	Pack 2
51520607	FU7 M6x9	3.0 - 7.0	M6	450	100	400
51520613	FU12,5 M6x9	8.0 - 12.5	M6	450	100	400
51520620	FU20 M6x9	14.0 - 20.0	M6	450	100	400
51520663	FU12,5 M6x9-B	8.0 - 12.5	M6	450	25	250
51520670	FU20 M6x9-B	14.0 - 20.0	M6	450	25	250
For use with static loads only.						

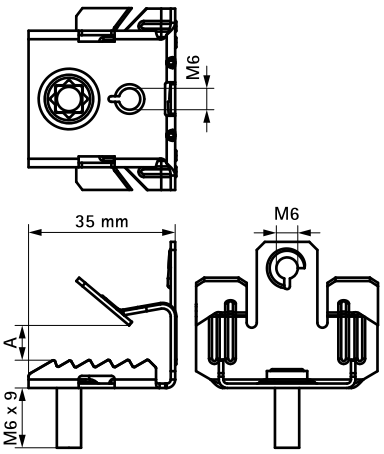

Complementary

77 starQuick® Clamp (Grey)

EN-SG 02/2022- Subject to modifications

Britclips® FU ICC

(J 10 15)

for flange 3 - 20 mm



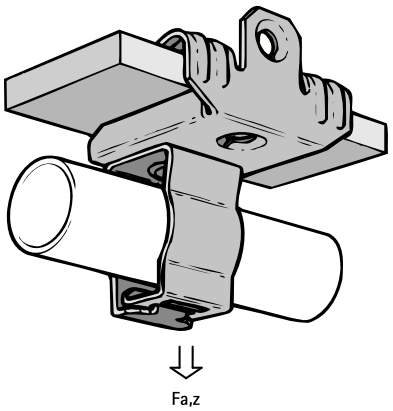

Features and Benefits

- for a solid fixing under flanges without welding or drilling
- suitable for pipe or cable fixing horizontal, vertical or crossed with respect to the flange
- conduit clip swivels 360°
- conduit clip with jaw locking (use pliers to lock)
- material: spring steel (type C67S according to EN10132)
- surface treatment: Delta-Tone 9000 (480 hours)

Part No.	Code	D (mm)	A (mm)	$F_{a,z}$ (N)	Pack 1	Pack 2
51121707	FU7 ICC17	12 - 16	3.0 - 7.0	250	100	400
51121713	FU12,5 ICC17	12 - 16	8.0 - 12.5	250	100	400
51121720	FU20 ICC17	12 - 16	14.0 - 20.0	250	50	200
51122407	FU7 ICC24	19 - 22	3.0 - 7.0	450	50	200
51122413	FU12,5 ICC24	19 - 22	8.0 - 12.5	450	50	200
51122420	FU20 ICC24	19 - 22	14.0 - 20.0	450	50	200
51122607	FU7 ICC26	23 - 25	3.0 - 7.0	450	50	200
51122613	FU12,5 ICC26	23 - 25	8.0 - 12.5	450	50	200
51122620	FU20 ICC26	23 - 25	14.0 - 20.0	450	50	200
51123207	FU7 ICC32	26 - 32	3.0 - 7.0	450	50	200
51123213	FU12,5 ICC32	26 - 32	8.0 - 12.5	450	50	200
51123220	FU20 ICC32	26 - 32	14.0 - 20.0	450	50	200
51124007	FU7 ICC40	33 - 40	3.0 - 7.0	450	25	200
51124013	FU12,5 ICC40	33 - 40	8.0 - 12.5	450	50	200
51124020	FU20 ICC40	33 - 40	14.0 - 20.0	450	50	200
For use with static loads only.						

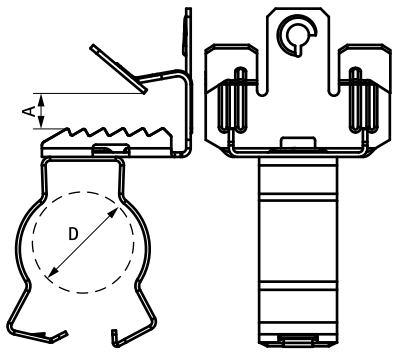

EN-SG 02/2022- Subject to modifications

Britclips® SB

(J 15 05)

for flange 2 - 17 mm



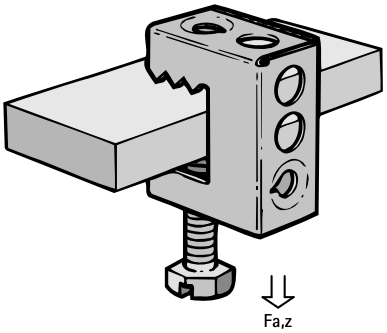

Features and Benefits

- for a solid fixing to steel construction without the need for welding or drilling
- various fixing possibilities to clamp (horizontal and vertical)
- with thread connector M6
- material: spring steel (type C67S according to EN10132)
- surface treatment: Delta-Tone 9000 (480 hours)

Part No.	Code	A (mm)	R	G	h (mm)	d1 (mm)	d2 (mm)	$F_{a,z}$ (N)	Pack 1	Pack 2
53420717	SB17 6,5	2 - 17	11 mm	Ø 6.0 mm	36	M6	6.0	550	100	300
53420757	SB17 6,5-B	2 - 17	11 mm	Ø 6.0 mm	36	M6	6.0	550	25	-
53421117	SB17 11	2 - 17	11 mm	Ø 11.0 mm	36	M6	6.0	550	100	400

Articles with codes ending in a '-B' are packed in a plastic bag.
For use with static loads only.

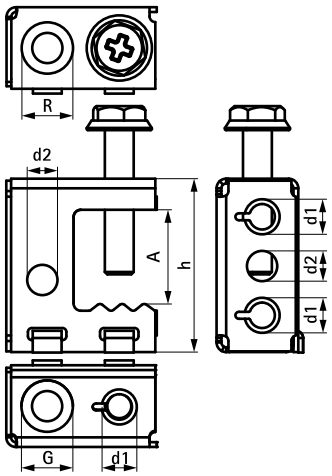

Complementary

446 BIS Stud Bolt
448 BIS Threaded Rod

Alternative

324 Britclips® Tiger

EN-SG 02/2022- Subject to modifications

Britclips® SB CT

(J 15 10)

for flange 2 - 17 mm



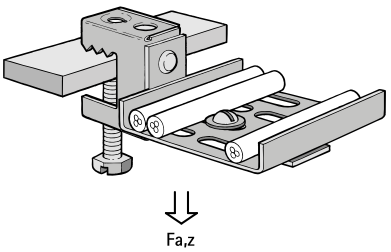

Features and Benefits

- for a solid fixing to steel construction without the need for welding or drilling
- for light duty cable trays
- material: Britclips® SB made of spring steel (type C67S according to EN10132); other parts made of steel
- surface treatment: Delta-Tone 9000 (480 hours)

Part No.	Code	$F_{a,z}$ (N)	Pack 1	Pack 2
53920017	SB17 CT	150	50	200
For use with static loads only.				

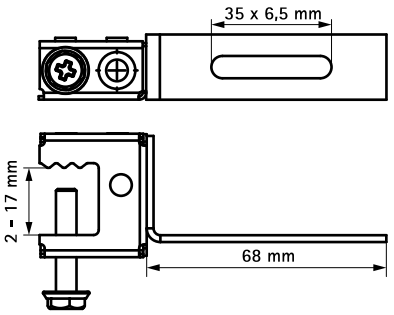

Britclips® SB ICCS

(J 15 20)

for flange 2 - 17 mm



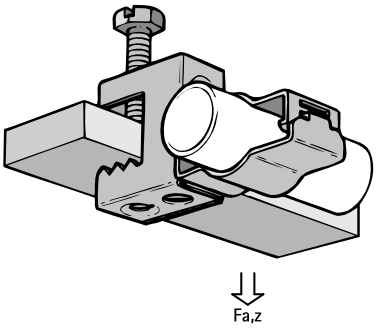

Features and Benefits

- suitable for pipe or cable fixing horizontal, vertical or crossed with respect to the flange
- conduit clip swivels 360°
- conduit clip with jaw locking (use pliers to lock)
- material: spring steel (type C67S according to EN10132)
- surface treatment: Delta-Tone 9000 (480 hours)

Part No.	Code	D (mm)	$F_{a,z}$ (N)	Pack 1	Pack 2
53122617	SB17 ICCS26	23 - 25	450	50	200
For use with static loads only.					

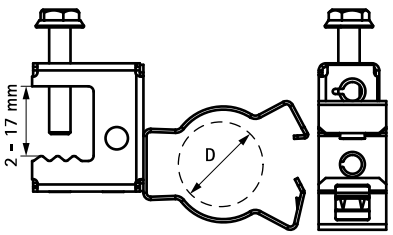

EN-SG 02/2022- Subject to modifications

Britclips® GAM8

(J 20 03)

for flange 2 - 12 mm





Features and Benefits

- for quick fixing of cables
- also suitable for outside use
- only 8 types for all pipes Ø 6 - 32 mm to girders 2 - 12 mm
- material: spring steel (type C67S according to EN10132)
- surface treatment: zinc plated (min. 400 hours resistant to salt spray)

Part No.	Code	D (mm)	A (mm)	Pack 1	Pack 2
52090709	GAM8 7 9	6 - 9	2 - 7	100	600
52090714	GAM8 7 14	10 - 14	2 - 7	100	600
52090721	GAM8 7 21	15 - 21	2 - 7	100	600
52090732	GAM8 7 32	22 - 32	2 - 7	100	300
52091209	GAM8 12 9	6 - 9	8 - 12	100	600
52091214	GAM8 12 14	10 - 14	8 - 12	100	600
52091221	GAM8 12 21	15 - 21	8 - 12	100	300
52091232	GAM8 12 32	22 - 32	8 - 12	100	300

For use with static loads only.

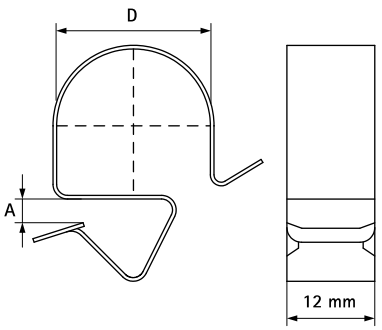

EN-SG 02/2022- Subject to modifications

Britclips® PC Flange

(J 20 05)

for flange 2 - 7 mm



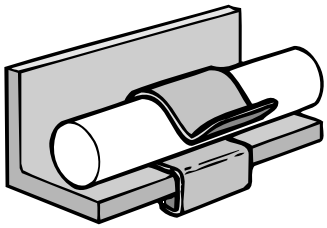

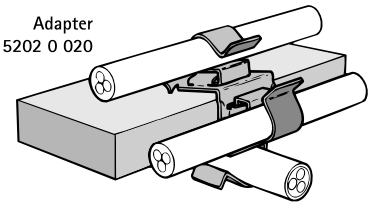

Features and Benefits

- for quick fixing of cables
- material: spring steel (type C67S according to EN10132)
- surface treatment: Delta-Tone 9000 (480 hours)

Part No.	Code	D (mm)	A (mm)	Pack 1	Pack 2
52020604	PC4 5,5	4.5 - 5.5	2 - 4	100	500
52020704	PC4 7	6.0 - 7.0	2 - 4	100	500
52020904	PC4 9	7.0 - 9.0	2 - 4	100	500
52021104	PC4 11	10.0 - 11.0	2 - 4	100	500
52021404	PC4 14	12.0 - 14.0	2 - 4	100	500
52021804	PC4 18	15.0 - 18.0	2 - 4	100	500
52022404	PC4 24	19.0 - 24.0	2 - 4	100	500
52023004	PC4 30	25.0 - 30.0	2 - 4	100	500
52020607	PC7 5,5	4.5 - 5.5	4 - 7	100	500
52020707	PC7 7	6.0 - 7.0	4 - 7	100	500
52020907	PC7 9	7.0 - 9.0	4 - 7	100	500
52021107	PC7 11	10.0 - 11.0	4 - 7	100	500
52021407	PC7 14	12.0 - 14.0	4 - 7	100	500
52021807	PC7 18	15.0 - 18.0	4 - 7	100	500
52022407	PC7 24	19.0 - 24.0	4 - 7	100	500
52023007	PC7 30	25.0 - 30.0	4 - 7	100	500

For use with static loads only.

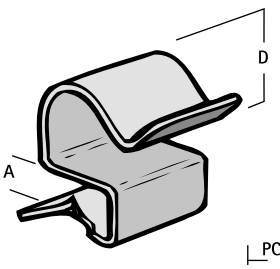

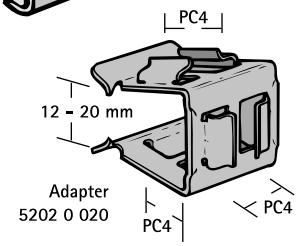

Alternative

339 Britclips® GAM8

EN-SG 02/2022- Subject to modifications

Britclips® PC Flange

(J 20 06)

for flange 8 - 12 mm



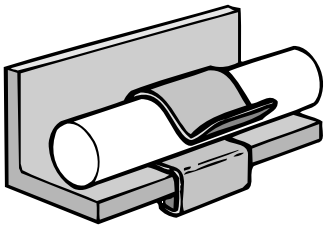

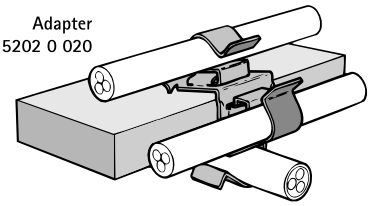

Features and Benefits

- for quick fixing of cables
- Part No. 52020020: adaptor for fastening of maximum 3 cable run clips (type PC4)
- material: spring steel (type C67S according to EN10132)
- surface treatment: Delta-Tone 9000 (480 hours)

Part No.	Code	D (mm)	A (mm)	Pack 1	Pack 2
52020712	PC12 7	6.0 - 7.0	8 - 12	100	500
52020912	PC12 9	7.0 - 9.0	8 - 12	100	500
52021112	PC12 11	10.0 - 11.0	8 - 12	100	500
52021412	PC12 14	12.0 - 14.0	8 - 12	100	500
52021812	PC12 18	15.0 - 18.0	8 - 12	100	500
52022412	PC12 24	19.0 - 24.0	8 - 12	100	500
52023012	PC12 30	25.0 - 30.0	8 - 12	100	500
52020020	PCC	0	12 - 20	50	200
For use with static loads only.					

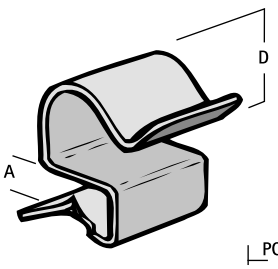

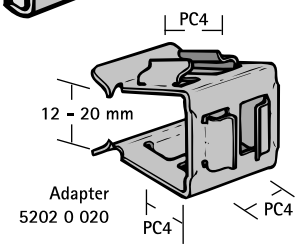

Alternative

339 Britclips® GAM8

Britclips® PCD

(J 20 15)

for flange 3 - 25 mm



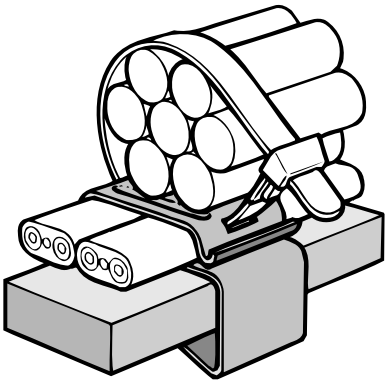

Features and Benefits

- for a solid fixing to steel construction without the need for welding or drilling
- suitable for horizontal and vertical flanges
- for quick fixing of round or flat cables parallel to flange
- material: spring steel (type C67S according to EN10132)
- surface treatment: Delta-Tone 9000 (480 hours)

Part No.	Code	A (mm)	Pack 1	Pack 2
52323412	PCD12	3 - 12	100	400
52323425	PCD25	12 - 25	100	300
For use with static loads only.				

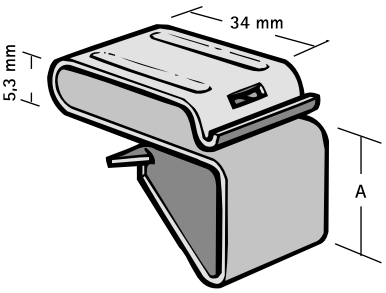

Complementary

370 BIS Cable Tie

EN-SG 02/2022- Subject to modifications

Britclips® PCF

(J 20 25)

for flange 3 - 11 mm



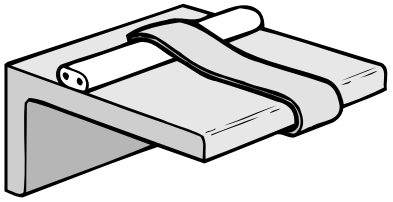

Features and Benefits

- for a solid fixing to steel construction without the need for welding or drilling
- for quick fixing of cables
- material: spring steel (type C67S according to EN10132)
- surface treatment: Delta-Tone 9000 (480 hours)

Part No.	Code	D (mm)	A (mm)	L	Pack 1
52022009	PCF9	7 - 20	8 - 9 / 10 - 11	41 mm	100
For use with static loads only.					

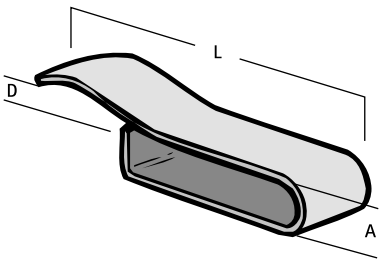

EN-SG 02/2022- Subject to modifications

Britclips® PCM

(J 20 30)

for flange 3 - 18 mm





Features and Benefits

- with 2 slots for cable strap up to width 9 mm
- zinc plated
- with hole Ø 6.5 mm for threaded rod or bolt M6
- material: spring steel (type C67S according to EN10132)

Part No.	Code	A (mm)	R	Pack 1	Pack 2
52350010	PCM10	3 - 10	M6	100	500
52350018	PCM18	10 - 18	M6	100	500
For use with static loads only.					

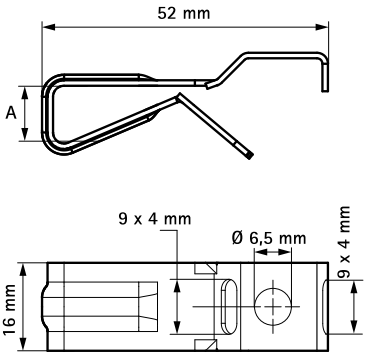

EN-SG 02/2022- Subject to modifications

Britclips® TRC

(J 25 05)

for threaded rods or flanges 16 - 20 mm

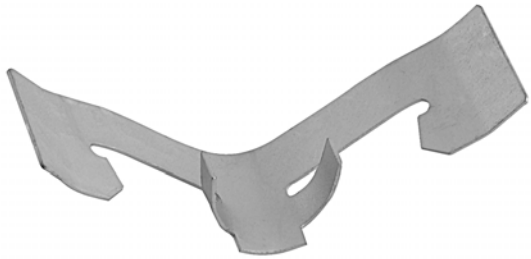

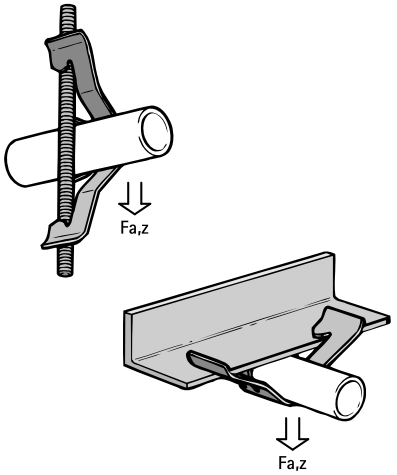

Features and Benefits

- for quick fixing to threaded rods or flanges without welding or drilling
- material: spring steel (type C67S according to EN10132)
- surface treatment: Delta-Tone 9000 (480 hours)

Part No.	Code	D (mm)	A (mm)	R	$F_{a,z}$ (N)	Pack 1	Pack 2
55922510	TRCM10	16 - 20	6 - 9	M6 - M8 / M10	450	100	400
For use with static loads only. *Load shown is for beam application, for rod application $F_{a,z}$ = 220 N.*							

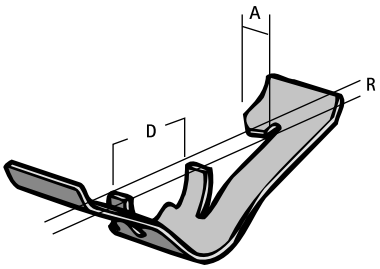

Complementary

448 BIS Threaded Rod

Britclips® TR

(J 25 15)

for threaded rods or flanges



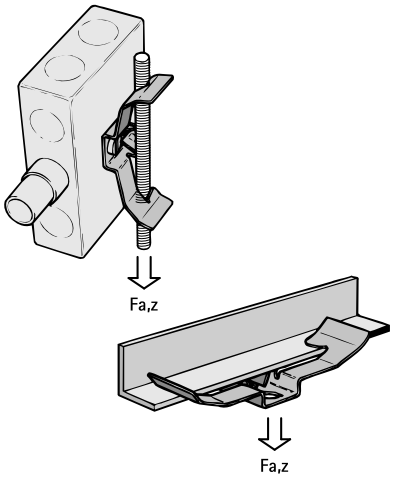

Features and Benefits

- for quick fixing to threaded rods or flanges without welding or drilling
- with female thread or hole for universal use
- material: spring steel (type C67S according to EN10132)
- surface treatment: Delta-Tone 9000 (480 hours)

Part No.	Code	A (mm)	R	G	B (mm)	$F_{a,z}$ (N)	Pack 1	Pack 2
55020008	TRM8	3 - 7	M4 - M8	M4	80	220	100	400
For use with static loads only.								

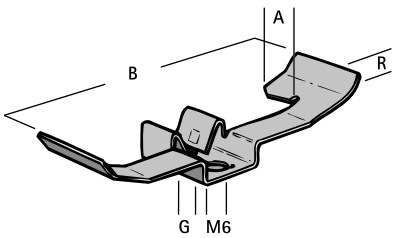

Complementary

446 BIS Stud Bolt
448 BIS Threaded Rod

EN-SG 02/2022- Subject to modifications

Britclips® RD

(J 30 05)

for ceilings



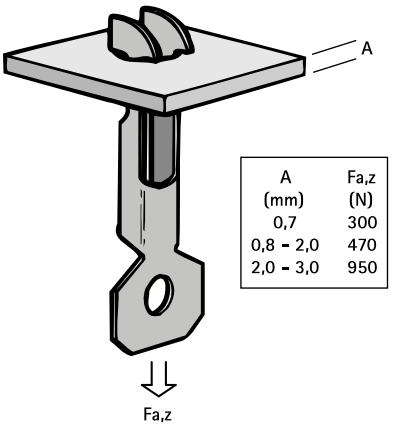

A (mm)	Fa,z (N)
0,7	300
0,8 - 2,0	470
2,0 - 3,0	950

Features and Benefits

- for fixing to roofing sheets
- with fixing hole (Ø 6.5 mm) to fix S-hook, bolt/nut, etc.
- material: spring steel (type C67S according to EN10132)
- surface treatment: Delta-Tone 9000 (480 hours)

Part No.	Code	d1 (mm)	Pack 1	Pack 2
54020000	RD	6.5	100	500
For use with static loads only. *Safe load dependent on thickness of roof sheet.*				

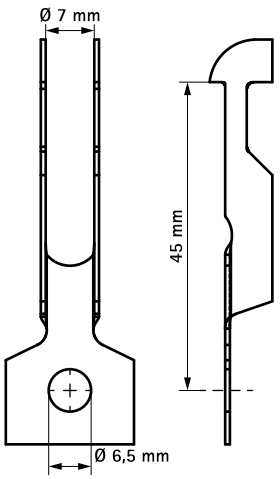

Complementary

441 BIS S-Hook
439 BIS Chain (DIN 5685)

EN-SG 02/2022- Subject to modifications

Britclips® RD ICT

(J 30 15)

for ceilings



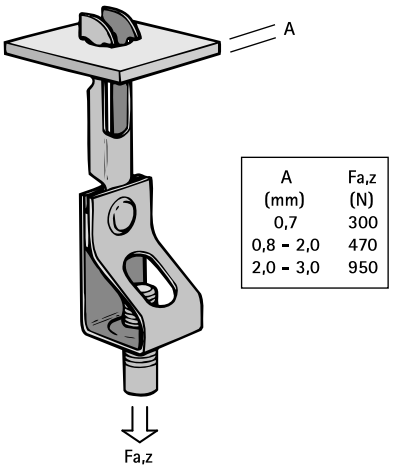

A (mm)	Fa,z (N)
0,7	300
0,8 - 2,0	470
2,0 - 3,0	950

Features and Benefits

- for fixing to roofing sheets
- with threaded rod holder (rod height adjustable by screwing)
- material: spring steel (type C67S according to EN10132)
- surface treatment: Delta-Tone 9000 (480 hours)

Part No.	Code	R	Pack 1	Pack 2
54420800	RD ICTM8	M8	100	400
54421000	RD ICTM10	M10	100	400
For use with static loads only. *Safe load dependent on thickness of roof sheet.*				

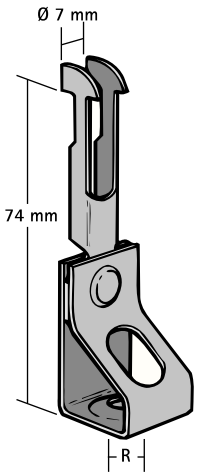

Complementary

446 BIS Stud Bolt
448 BIS Threaded Rod

EN-SG 02/2022- Subject to modifications

Britclips® Rapid RTB

(J 30 25)

for ceilings



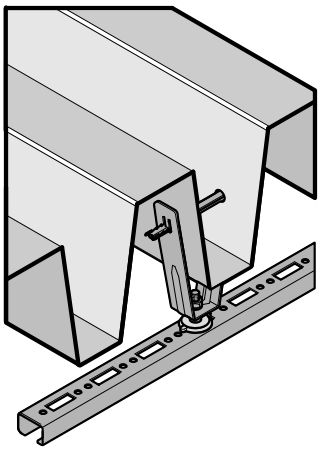

Features and Benefits

- for fixing to trapezium shaped roofing sheets
- minimum thickness roof sheet 0.63 mm
- quick fixing: one piece and elements cannot be lost
- for making a hole in the roof deck we recommend the use of the BIS Hole Punching Pliers (Part No. 692 0 012)
- material: steel
- pre-galvanized

Part No.	Code	G	Pack 1
6781106	RTB 6	M6	50
6781108	RTB 8	M8	50
6781110	RTB 10	M10	50
6781013	RTB 13	Ø 13.0 mm	50

Maximum load ($F_{a,z}$) depends on the load capacity of the trapezium shaped roofing sheet. Before mounting, the roof load capacity has to be confirmed by a structural engineer.

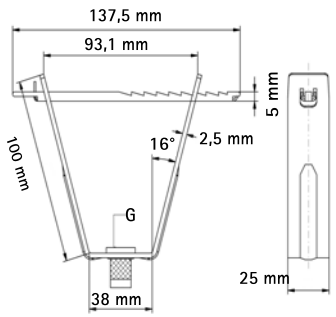

Complementary

446 BIS Stud Bolt
448 BIS Threaded Rod
405 BIS Hole Punching Plier

Britclips® ACC15

(J 35 05)

for ceiling grid 15 mm



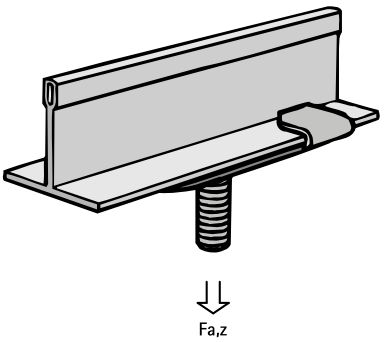

Features and Benefits

- twist on fixing
- for fixing to the ceiling grid
- with stud bolt M6 x 16 mm for fixing of clamp, conduit junction box, etc.
- material: spring steel (type C67S according to EN10132)
- surface treatment: Delta-Tone 9000 (480 hours)

Part No.	Code	$F_{a,z}$ (N)	Pack 1	Pack 2
56521600	ACC15 M6x16	220	100	600
For use with static loads only.				

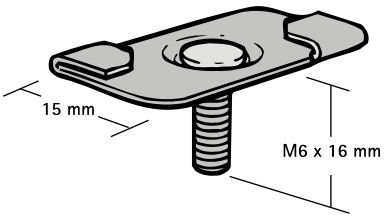

Complementary

77 starQuick® Clamp (Grey)

EN-SG 02/2022- Subject to modifications

Britclips® ACC25

(J 35 10)

for ceiling grid 25 mm



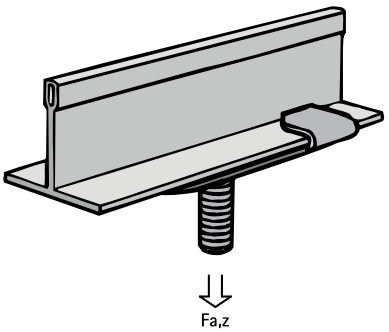

Features and Benefits

- twist on fixing
- for fixing to the ceiling grid
- with stud bolt M6 (length see table) for fixing of clamp, conduit junction box, etc.
- material: spring steel (type C67S according to EN10132)
- surface treatment: Delta-Tone 9000 (480 hours)

Part No.	Code	G	$F_{a,z}$ (N)	Pack 1	Pack 2
56521101	ACC25 M6x11	M6 x 11 mm	220	100	400
56521601	ACC25 M6x16	M6 x 16 mm	220	100	400
56522501	ACC25 M6x25	M6 x 25 mm	220	100	400
For use with static loads only.					

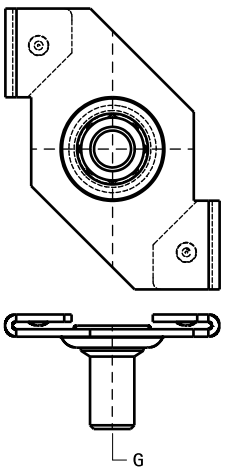

Complementary

77 starQuick® Clamp (Grey)

Britclips® ACN

(J 35 15)

for ceiling grid



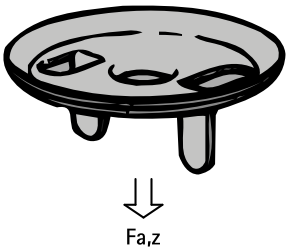

Features and Benefits

- twist on fixing
- for fixing without tools (also protects coating)
- with female thread M6
- material: spring steel (type C67S according to EN10132)
- surface treatment: Delta-Tone 9000 (480 hours)

Part No.	Code	$F_{a,z}$ (N)	Pack 1	Pack 2
56520156	ACN6-B	220	25	150
For use with static loads only.				

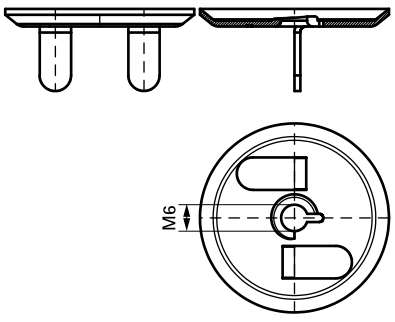

Complementary

446 BIS Stud Bolt

EN-SG 02/2022- Subject to modifications

Britclips® ACO

(J 35 30)

for ceiling grid 25 mm



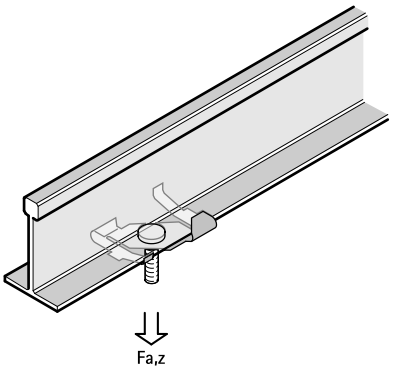

Features and Benefits

- twist on fixing
- for fixing to the ceiling grid
- with stud bolt M6 (length see table) for fixing of clamp, conduit junction box, etc.
- with bended ends to secure suspension
- material: spring steel (type C67S according to EN10132)
- surface treatment: Delta-Tone 9000 (480 hours)

Part No.	Code	G	$F_{a,z}$ (N)	Pack 1	Pack 2
56521102	ACO M6x11	M6 x 11 mm	220	100	400
56521602	ACO M6x16	M6 x 16 mm	220	100	400
56521652	ACO M6x16-B	M6 x 16 mm	220	25	150
56522502	ACO M6x25	M6 x 25 mm	220	100	400
For use with static loads only.					

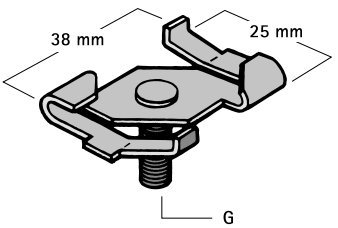

Complementary

77 starQuick® Clamp (Grey)

EN-SG 02/2022- Subject to modifications

Britclips® ACT

(J 35 37)

for ceiling grid 25 mm



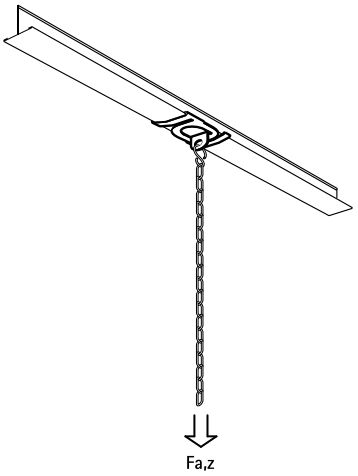

Features and Benefits

- twist on fixing
- for fixing to the ceiling grid
- with fixing hole (Ø 6.0 mm) to fix S-hook, etc.
- material: steel 1.0226

Part No.	Code	d1 (mm)	$F_{a,z}$ (N)	ST	Pack 1	Pack 2
56091075	ACTW-B	6	190	epoxy-coated (white)	25	250
For use with static loads only.						

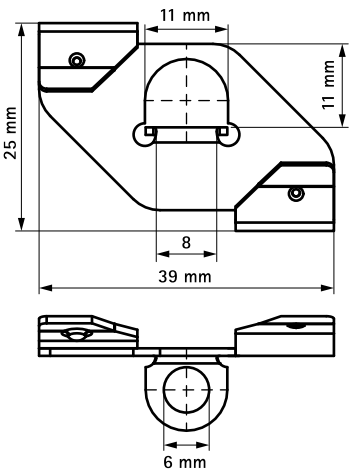

EN-SG 02/2022- Subject to modifications

Britclips® ACHW / ACHZ

(J 35 40)

for ceiling grid 25 mm



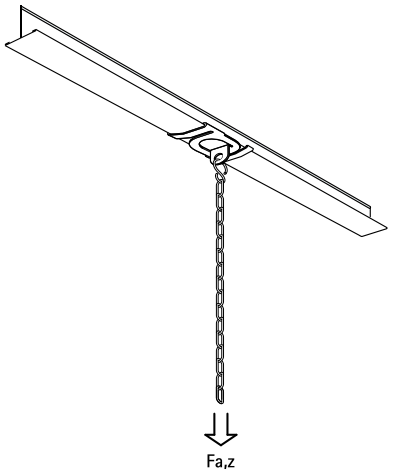

Features and Benefits

- twist on fixing
- for fixing to the ceiling grid
- with fixing hole (Ø 7,0 mm) to fix S-hookIt/nut, etc.
- material: spring steel (type C67S according to EN10132)

Part No.	Code	d1 (mm)	$F_{a,z}$ (N)	ST	Pack 1	Pack 2
56090025	ACHW	7.0	220	epoxy-coated (white)	100	500
56030025	ACHZ	7.0	220	zinc plated	100	500
For use with static loads only.						

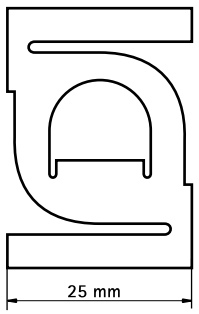

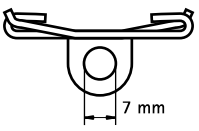

Complementary

441 BIS S-Hook
439 BIS Chain (DIN 5685)

EN-SG 02/2022- Subject to modifications

Britclips® ACS

(J 35 55)

for ceiling grid



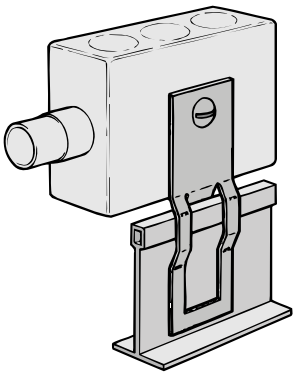

Features and Benefits

- for fixing to the ceiling grid
- straight, with hole (Ø 6.5 mm) for universal connection
- material: spring steel (type C67S according to EN10132)
- surface treatment: Delta-Tone 9000 (480 hours)

Part No.	Code	Pack 1	Pack 2
56020002	ACS	100	500
For use with static loads only.			

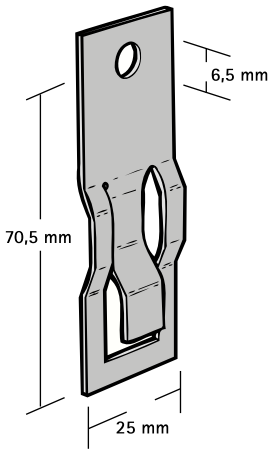

EN-SG 02/2022- Subject to modifications

Britclips® T Bar Angle Bracket

(J 35 140)

for ceiling grid

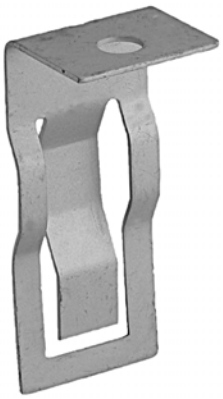

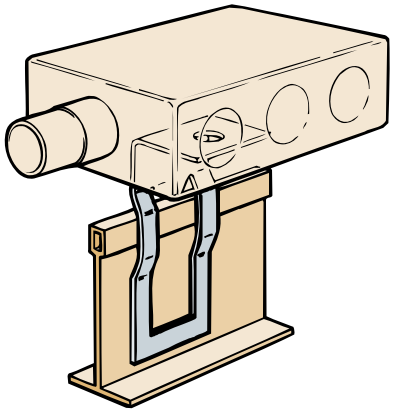

Features and Benefits

- for fixing to the ceiling grid
- angle bracket 90°
- with drilling hole (Ø 6.5 mm) for a universal connection
- material: spring steel (type CS70)
- surface treatment: Delta-Tone 9000 (480 hours)

Part No.	Code	Pack 1	Pack 2
56020001	ACA	100	500
For use with static loads only.			

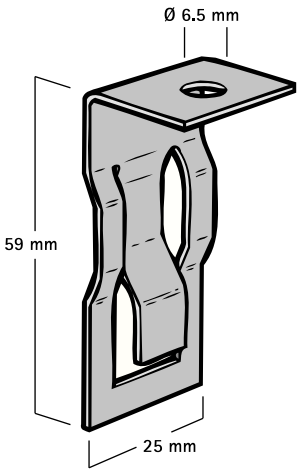

Complementary

446 BIS Stud Bolt
448 BIS Threaded Rod

EN-SG 02/2022- Subject to modifications

Britclips® PHV

(J 40 50)

for vertical flanges 1 - 7 mm



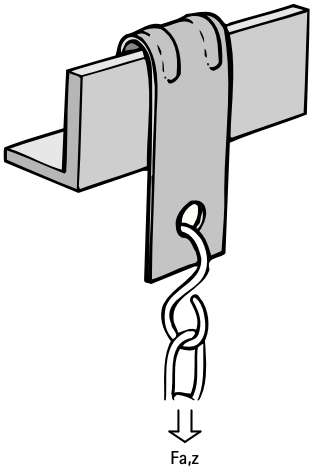

Features and Benefits

- for fixing to vertical flanges
- with fixing hole (Ø 6.5 mm) vertical to fix S-hook, bolt/nut, etc.
- material: spring steel (type C67S according to EN10132)
- surface treatment: Delta-Tone 9000 (480 hours)

Part No.	Code	A (mm)	H (mm)	d1 (mm)	$F_{a,z}$ (N)	Pack 1	Pack 2
57020005	PHV5	1 - 5	39	6.5	720	100	500
For use with static loads only.							

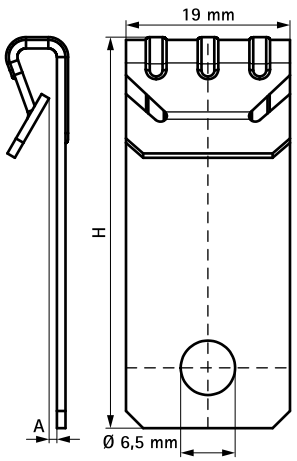

Complementary

441 BIS S-Hook
439 BIS Chain (DIN 5685)

EN-SG 02/2022- Subject to modifications

Britclips® PHV ICT

(J 40 60)

for vertical flanges 1 - 7 mm



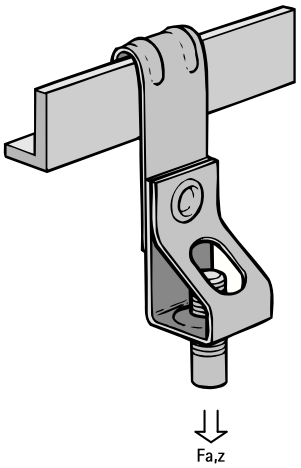

Features and Benefits

- for fixing to vertical flanges
- with threaded rod holder (rod height adjustable by screwing)
- material: spring steel (type C67S according to EN10132)
- surface treatment: Delta-Tone 9000 (480 hours)

Part No.	Code	A (mm)	R	$F_{a,z}$ (N)	Pack 1	Pack 2
57420605	PHV5 ICTM6	1 - 5	M6	650	100	400
57420805	PHV5 ICTM8	1 - 5	M8	700	100	400
57421005	PHV5 ICTM10	1 - 5	M10	720	100	400
For use with static loads only.						

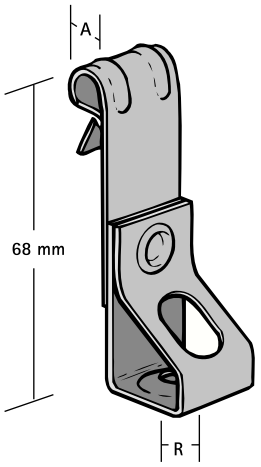

Complementary

446 BIS Stud Bolt
448 BIS Threaded Rod

Britclips® WN

(J 45 30)

for composite flooring systems



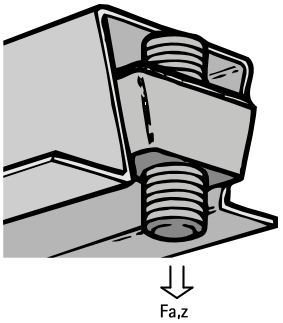

Features and Benefits

- for fixing to composite flooring systems
- with thread connector
- material: steel
- zinc plated

Part No.	Type	R	L	B (mm)	H (mm)	a (°)	$F_{a,z}$ (N)	Pack 1
6213006	HW6	M6	12.5 mm	25	13.0	15.0°	1,200	100
6213008	HW8	M8	12.5 mm	25	13.0	15.0°	1,690	100
6213010	HW10	M10	12.5 mm	25	13.0	15.0°	2,050	100
6213106	HW6SR	M6	13.0 mm	21	10.0	11.5°	1,200	100
6213108	HW8SR	M8	13.0 mm	21	10.0	11.5°	1,690	100
6213110	HW10SR	M10	13.0 mm	21	10.0	11.5°	2,250	100
6213208	HMWA8	M8	10.0 mm	19	10.0	23.5°	1,690	100
6213408	HMW8	M8	9.5 mm	19	9.5	14.0°	1,690	100
For use with static loads only.								

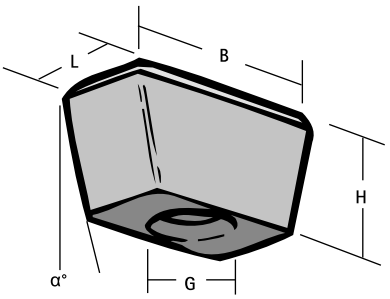

Complementary

446 BIS Stud Bolt
448 BIS Threaded Rod

EN-SG 02/2022- Subject to modifications

BIS LYRE - LY

(J 50 30)

for all pipes Ø 13 - 25 mm





Features and Benefits

- universally applicable
- material: steel
- zinc plated

Part No.	D (mm)	d1 (mm)	Pack 1	Pack 2
59131600	13 - 16	5.3	200	1,000
59132000	17 - 20	5.3	100	500
59132500	21 - 25	5.3	100	500
For use with static loads only.				

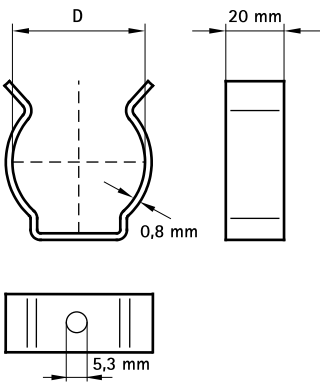

Alternative

77 starQuick® Clamp (Grey)

Britclips® RSWB

(J 50 175)

Rapid Sliding Wall Bracket





Features and Benefits

- extendable bracket for faster mounting of electrical boxes, conduit and pipework
- suitable for use in stud walls and floor joists
- can be fixed to wood or metal joists
- quicker and easier to install than traditional methods
- can be set at multiple depths
- combine with starQuick® clamps or RapidRail® Hammerfix for even faster fixing
- Part No. 59491016: shorter version expands from 10 - 16" (25 - 40 cm)
- Part No. 59491624: longer version expands from 16 - 24" (40 - 60 cm)
- material: steel
- pre-galvanized

Part No.	Model	L	B (mm)	H (mm)	Pack 1
59491016	10 - 16" (25 - 40 cm)	323 mm	29.2	13.7	50
59491624	16 - 24" (40 - 60 cm)	440 mm	29.2	13.7	50

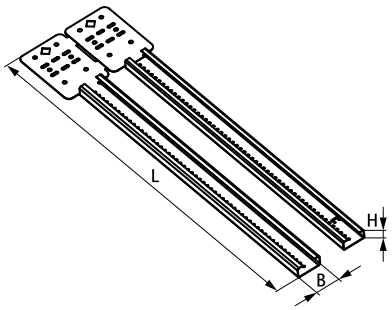

Complementary

77 starQuick® Clamp (Grey)
164 BIS RapidRail® Hammerfix
157 BIS RapidRail® Slide Nut

Complementary

89 starQuick® Universal Rail Adaptor

EN-SG 02/2022- Subject to modifications

BIS Twistfix

(J 58 10)

14 - 72 mm





Features and Benefits

- space saving
- allows fixing of different diameters with the same clip
- for electrical and optical fiber systems
- material: PA (polyamide), black
- halogen free
- UV resistant
- Part No. 658420X: Flamability rating: class UL 94 HB
- temperature resistance from -18 °C to +66 °C

Part No.	D (mm)	For Rail	Pack 1
6584202	14 - 48	WM0 (27x18) + 28x30	100
6584203	14 - 48	35x18	100
6584204	24 - 72	WM0 (27x18) + 28x30	50
6584205	24 - 72	35x18	50

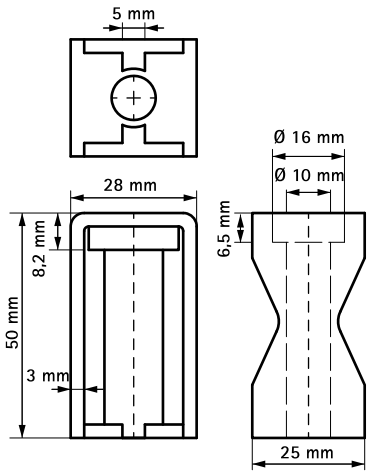

Complementary

364 BIS Fixing Rail for BIS Twistfix
133 RapidRail® Fixing Rail

EN-SG 02/2022- Subject to modifications

BIS Fixing Rail for BIS Twistfix

(J 58 15)



Features and Benefits

- for a quick and easy fixing
- rail is open at both ends for easy fixing with electrical screwdriver

Part No.	L	s (mm)	S (mm)	From Rail	ST	BndS
6504125	1 m	1.50	16	35x18T	pre-galvanized	12
6504018	500 mm	1.50	16	35x18T	pre-galvanized	12
Part No. 6504XXX: pre-galvanized.						

Complementary
363 BIS Twistfix

EN-SG 02/2022- Subject to modifications

BIS Fixing Rail for BIS Cablefix

(J 58 25)



Features and Benefits

- for a quick and easy fixing
- with continuous perforation
- distance between rail end and first hole is always equal
- material: steel

Part No.	L	s (mm)	S (mm)	From Rail	ST	BndS
6504026	2 m	2.00	22.0	38x30	pre-galvanized	16
Part No. 6504XXX: pre-galvanized.						

BIS STARLOCK I Cable Bind System

(J 60 05)

cable bind system





Features and Benefits

- for batch fixing large quantities of cable ties
- easy and quick to use
  - tightens strip and cuts redundant part
- BIS STARLOCK I standard model, supplied as startset in blisterpack
- material:
  - cable strap made of PA6 (polyamide)
  - locking clips made of POM (polyoxymethylene)
- cable strap:
  - tensile strength 15 kg (safety factor 1:2)
  - UV-resistant (black)
  - temperature resistance up to approx. 70 °C
  - width 4.5 mm

Part No.	Model	Pack 1	Pack 2
0909010	Startset consisting of: 1 x BIS STARLOCK I, 1 x 15 m cable strap and 200 locking clips, white	1	6
0909011	Startset consisting of: 1 x BIS STARLOCK I, 1 x 15 m cable strap and 200 locking clips, black	1	6

Complementary

369 BIS STARLOCK Parts
368 BIS STARLOCK Consumables

EN-SG 02/2022- Subject to modifications

BIS STARLOCK II Cable Bind System

(J 60 10)

cable bind system



0909060



0909061



Features and Benefits

- for batch fixing large quantities of cable ties
- easy and quick to use
  - tightens strip and cuts redundant part
- BIS STARLOCK II with tightening lever, supplied as startset in case
- material:
  - cable strap made of PA6 (polyamide)
  - locking clips made of POM (polyoxymethylene)
- cable strap:
  - tensile strength 15 kg (safety factor 1:2)
  - UV-resistant (black)
  - temperature resistance up to approx. 70 °C
  - width 4.5 mm

Part No.	Model	Pack 1	Pack 2
0909060	Startset consisting of: 1 x BIS STARLOCK II, 1 x 15 m cable strap and 100 locking clips, white	1	9
0909061	Startset consisting of: 1 x BIS STARLOCK II, 1 x 15 m cable strap and 100 locking clips, black	1	9

EN-SG 02/2022- Subject to modifications

BIS STARLOCK Consumables

(J 60 15)

cable bind system





Features and Benefits

- material:
  - cable strap made of PA6 (polyamide)
  - locking clips made of POM (polyoxymethylene)
- cable strap:
  - tensile strength 15 kg (safety factor 1:2)
  - UV-resistant (black)
  - temperature resistance up to approx. 70 °C
  - width 4.5 mm

Part No.	Model	Pack 1	Pack 2
0909120	Cable strap L = 15 m, white	2	20
0909100	Cable strap L = 15 m, white	300	-
0909121	Cable strap L = 15 m, black	2	20
0909101	Cable strap L = 15 m, black	300	-
0909150	Cable strap L = 100 m, white	1	16
0909151	Cable strap L = 100 m, black	1	16
0909200	Stick with 20 locking clips, white	10	100
0909250	Stick with 20 locking clips, white	10	100
0909201	Stick with 20 locking clips, black	10	100
0909251	Stick with 20 locking clips, black	10	100
0909211	Stick with 20 locking clips, black	50	-

EN-SG 02/2022- Subject to modifications

BIS STARLOCK Parts

(J 60 20)

cable bind system





Features and Benefits

- for BIS STARLOCK I and BIS STARLOCK II
  Cable bundler

Part No.	Model	For	Pack 1	Pack 2
0909920	Knives (replacement)	BIS STARLOCK I + II	5	100

EN-SG 02/2022- Subject to modifications

BIS Cable Tie

(J 60 35)

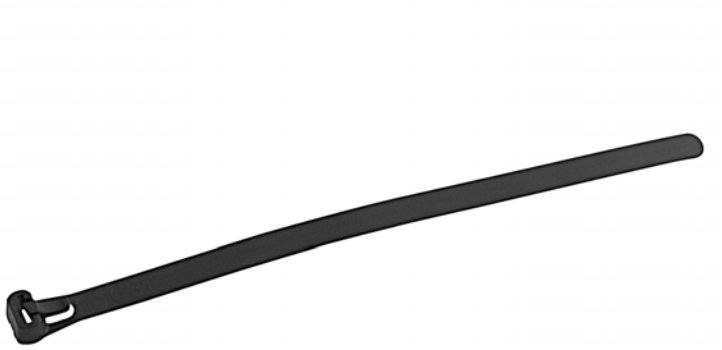

Features and Benefits

- material: PA (polyamide)
- resistant to oil, grease, salt and thin acids
- temperature resistance from -35 °C to +85 °C

Part No.	L	Colour	Pack 1
0903200	200 x 3.6 mm	Black	100
0903290	290 x 3.6 mm	Black	100
0903370	370 x 3.6 mm	Black	100
0905178	178 x 4.8 mm	Black	100
0905200	200 x 4.8 mm	Black	100
0905250	250 x 4.8 mm	Black	100
0905290	290 x 4.8 mm	Black	100
0905360	360 x 4.8 mm	Black	100
0905430	430 x 4.8 mm	Black	100
0901290	290 x 7.6 mm	Black	100
0907240	240 x 7.8 mm	Black	100
0901300	300 x 7.8 mm	Black	100
0901370	365 x 7.8 mm	Black	100
0907450	450 x 7.8 mm	Black	100
0907540	540 x 7.8 mm	Black	100
0907750	720 x 7.8 mm	Black	100
0908780	780 x 9.0 mm	Black	100

Alternative

366 BIS STARLOCK I Cable Bind System

EN-SG 02/2022- Subject to modifications

BIS Basefix

(J 60 40)



Features and Benefits

- quick installation in 15 seconds
- better fit of tube due to form
- to fix tubes with cable ties on different surfaces

Part No.	Model	Pack 1	Pack 2
0900406	Nylon cable tie fixing	100	1,000

BIS Fixing Accessory for Cable Tie

(J 60 45)

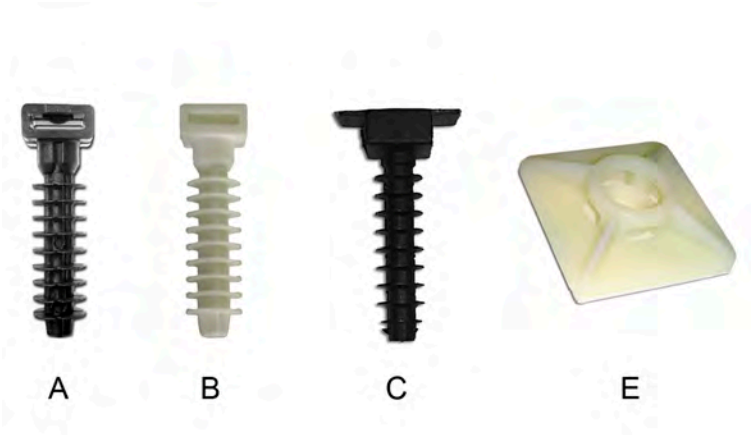

Features and Benefits

- accessories for fixing nylon tie-wraps to different surfaces

Part No.	Model	Type	Pack 1	Pack 2
0900401	Stud Ø 8 (black)	A	100	5,000
0900402	Stud Ø 8 (white)	B	100	5,000
0900403	Stud Ø 6	C	100	5,000

EN-SG 02/2022- Subject to modifications

BIS Nail Clip (White)

(J 65 05)

for fixing round electrical conductors



Features and Benefits

Part No.	For	Pc.	Pack 1
08590602	Cable 2 x 1	6	100
08590702	Cable 2 x 1 / 2 x 1.5	7	100
08590802	Cable 2 x 2.5	8	100
08590902	Cable 2 x 4 / 3 x 2.5	9	100
08591002	Cable 2 x 4	10	100

EN-SG 02/2022- Subject to modifications

BIS Nail Clip (Black)

(J 65 10)

for fixing round electrical conductors



Features and Benefits

Part No.	For	Pc.	Pack 1
08580602	Cable 2 x 1	6	100
08580702	Cable 2 x 1 / 2 x 1.5	7	100
08580802	Cable 2 x 2.5	8	100
08580902	Cable 2 x 4 / 3 x 2.5	9	100
08581002	Cable 2 x 4	10	100

EN-SG 02/2022- Subject to modifications

K BIS Fixing Accessories



BIS Suspension Band

BIS Suspension Band - Plated 377
BIS Suspension Band - Plasticized 378
BIS Suspension Band - Loose 379
BIS Suspension Band (Curved) - Steel 380
BIS Suspension Band (Curved) - Aluminium 381
BIS Suspension Band - Plastic-coated 382



BIS Autoblock Suspension Band

BIS Uniblock 383



BIS Wall Plates

BIS Wall Plate 670 384
BIS Wall Plate 385
BIS Wall Plate CO_2 Welded (BUP1000) 386
BIS Wall Plate Resistance Welded 387
BIS Wall Plate Resistance Welded (BUP1000) 388
BIS Wall Plate CO_2 Welded 389
BIS Wall Plate 672 (Male Thread) 391
BIS Duplo Fixing Plate 392
BIS Double Wall Plate 393



BIS Universal Cube

BIS Universal Cube 394



BIS Beam Clamps

BIS Beam Clamp Model C (BUP1000) 395
BIS Beam Clamp Model C 396
BIS Safety Strap for Beam Clamp Model C 397
BIS Beam Clamp Model O 398
BIS Beam Clamp Model O - Accessories 399
BIS Swivel Beam Clamp Model P 400
BIS Safety Strap for Beam Clamp Model P 401



BIS Fixing to Walls or Ceilings

BIS Roofing Sheet Hanger (BUP1000) 402
BIS Roofing Sheet Hanger VdS 403
BIS Roofing Sheet Hanger 404
BIS Hole Punching Plier 405
BIS Replacement Punching Pins 406
BIS Roof Suspension Assembly 407
BIS Height Adjuster 408



BIS Fixings to Corrugated Sheets

BIS Clamp for Corrugated Sheet 409



BISMAT® Rail

BISMAT® Rail 410
BISMAT® Rail - Plier 411
BISMAT® Rail - Backing Plate 412
BISMAT® Rail - Sound Shield 413
BISMAT® Rail - Sound Cap 414
BISMAT® Rail - Mounting Clamp 415



BIS Hanger Bolts and Wood Screws

BIS Hanger Bolt (BUP1000) 416
BIS Hanger Bolt 417
BIS Threaded Shoulder Wood Screw Model A 418
BIS Wood Screw Special 419

K BIS Fixing Accessories



BIS Screws, Bolts, Washers, Nuts

BIS Suspension Eye (Female Threaded) **420**
BIS Suspension Eye (Zamak) **421**
BIS Eye Bolt **422**
BIS Hexagon Head Bolt (BUP1000) **423**
BIS Hexagon Head Bolt **424**
BIS Washer (BUP1000) **425**
BIS Washer **426**
BIS Serated Washer **427**
BIS Hexagon Nut (BUP1000) **428**
BIS Hexagon Nut **429**
Silent Nut Assembly for Stub-Out Bracket and Universal Shower Valve Plate **430**
BIS Sheet Metal Cylinder Screw **432**
BIS Suspension Eye - Wood Thread **433**
BIS Suspension Eye - Metric **434**
BIS Socket Head Bolt (BUP1000) **435**
BIS Socket Head Bolt and Screw **436**
BIS Hexagon Wood Bolt **437**
BIS Chipboard Screw **438**



BIS Chains

BIS Chain (DIN 5685) **439**
BIS Victor Chain (DIN 5686) **440**
BIS S-Hook **441**
BIS Splitted S-Hook **443**
BIS Pig Tail Chain Hook **444**



BIS Stud Bolts, Stud Connectors

BIS Stud Bolt (BUP1000) **445**
BIS Stud Bolt **446**
BIS Threaded Rod (BUP1000) **447**
BIS Threaded Rod **448**
BIS Threaded Tube (BUP1000) **449**
BIS Threaded Tube **450**
BIS Threaded Distance Bar **451**
BIS Threaded Nipple **452**
BIS Stud Connector (BUP1000) **453**
BIS Stud Connector **454**
BIS Thread Adaptor (M/F) **455**
BIS Stud Connector (Round) **456**
BIS Threaded Rod Connector **457**



BIS DobyGrip

BIS DobyGrip Loop **458**
BIS DobyGrip Stud **459**
BIS DobyGrip Snap End Hook **460**
BIS DobyGrip Wire Reel **461**
BIS DobyGrip Lock **462**
BIS DobyGrip Lighting Kit **463**
BIS Catenary Wire Cutter **464**
BIS Wire Rope **465**
BIS Rope Grip and Eyelet **466**
BIS Hook and Eye Rope Tensioner **467**
BIS Anchor Ring **468**

EN-SG 02/2022- Subject to modifications

BIS Suspension Band - Plated

(K 05 05)

fixing of pipes and air ducts



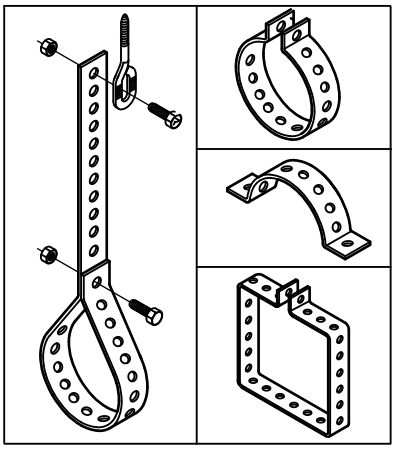

Features and Benefits

- with continuous perforation
- material: steel
- pre-galvanized

Part No.	Type	L	b x s (mm)	d1 (mm)	k (mm)	$F_{a,z}$ (N)	Pack 1	App.
0830012	5055	10 m	12 x 1.0	5.0	8.0	1,050	10	roll
0830017	5055	10 m	17 x 1.0	7.0	12.0	1,500	10	roll
0830117	5055	10 m	17 x 1.0	6.5	15.0	1,290	10	roll
0831012	5055L	10 m	12 x 0.8	5.0	8.0	840	10	roll
0831017	5055L	10 m	17 x 0.8	7.0	12.0	1,070	10	roll
0831026	5055L	10 m	26 x 1.0	8.5	14.0	2,620	10	roll

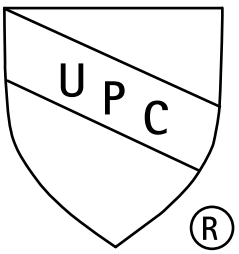

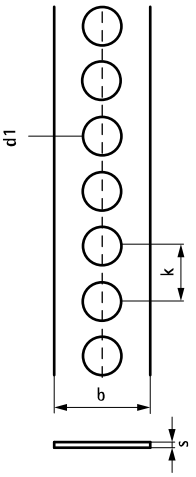

Complementary

420 BIS Suspension Eye (Female Threaded)
589 BIS Shouldered Masonry Nail
433 BIS Suspension Eye - Wood Thread

Complementary

434 BIS Suspension Eye - Metric
497 BIS HK

BIS Suspension Band - Plasticized

(K 05 10)

fixing of pipes and air ducts



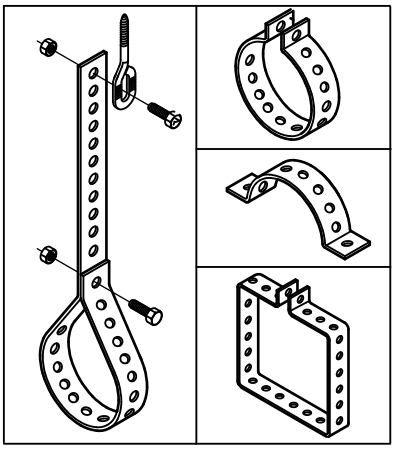

Features and Benefits

- with continuous perforation
- material: steel, PVC coated
- pre-galvanized, welded plastic case

Part No.	Model	L	b x s (mm)	d1 (mm)	k (mm)	$F_{a,z}$ (N)	Pack 1	App.
0832714	Without packaging	10 m	14 x 3.0	4.5	15.0	880	10	roll
0832728	Without packaging	10 m	26 x 3.2	8.5	16.0	1,260	10	roll
0832719	Without packaging	10 m	19 x 3.0	-	15.0	1,230	10	roll
0832019	Cardboard box	10 m	19 x 3.0	-	15.0	1,230	18	roll

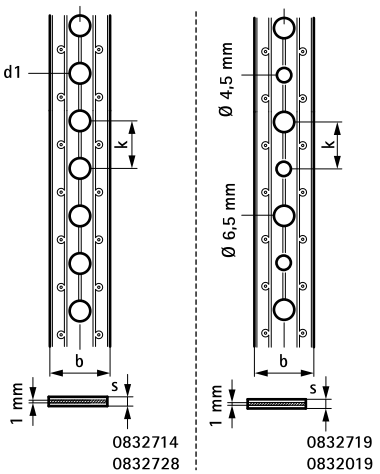

Complementary

420 BIS Suspension Eye (Female Threaded)
589 BIS Shouldered Masonry Nail
433 BIS Suspension Eye - Wood Thread

Complementary

434 BIS Suspension Eye - Metric
497 BIS HK

EN-SG 02/2022- Subject to modifications

BIS Suspension Band - Loose

(K 05 15)

fixing of pipes and air ducts



Features and Benefits

- material: PP (polypropylene)
- Part No. 0833015: in carton box
- Part No. 0833915: bundled
- tear load: ca. 2,500 N
- colour: traffic black
- UV-stabilized

Part No.	L	b x s (mm)	Pack 1	App.
0833915	15 m	15 x 0.9	10	roll
0833015	15 m	15 x 0.9	10	roll

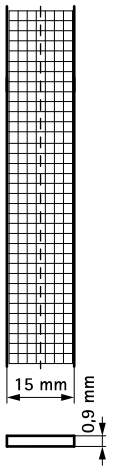

Alternative

378 BIS Suspension Band - Plasticized

EN-SG 02/2022- Subject to modifications

BIS Suspension Band (Curved) - Steel

(K 05 20)

fixing of pipes and air ducts



Features and Benefits

- flexible system with multiple applications
- dispenser cassette allows easy handling and storage
- pre-galvanized
- material: steel

Part No.	L	b x s (mm)	d1 (mm)	k (mm)	$F_{a,z}$ (N)	Pack 1	App.
0835012	10 m	12 x 0.8	5.0	14.5	840	10	roll
0835017	10 m	17 x 0.8	7.0	20.2	1,010	10	roll
0835026	10 m	26 x 1.0	8.0	25.0	1,650	10	roll

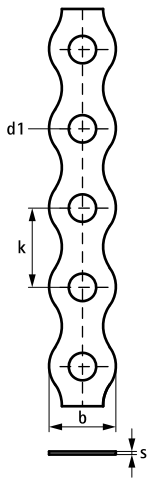

EN-SG 02/2022- Subject to modifications

BIS Suspension Band (Curved) - Aluminium

(K 05 25)

fixing of pipes and air ducts



Features and Benefits

- flexible system with multiple applications
- dispenser cassette allows easy handling and storage
- material: aluminium

Part No.	L	b x s (mm)	d1 (mm)	k (mm)	$F_{a,z}$ (N)	Pack 1	App.
0834117	10 m	17 x 1.0	7.0	20.2	310	10	roll

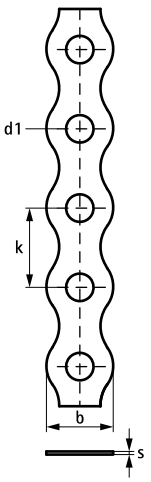

EN-SG 02/2022- Subject to modifications

BIS Suspension Band - Plastic-coated

(K 05 35)

fixing of pipes and air ducts



Features and Benefits

- flexible system with multiple applications
- material: plastic-coated galvanized steel
- ideal for applications requiring corrosion resistance and electrical insulation

Part No.	Model	L	b x s (mm)	d1 (mm)	k (mm)	$F_{a,z}$ (N)	Pack 1	App.
0839018	Without packaging	10 m.	18 x 1.2	6.5	20.0	1,010	10	roll

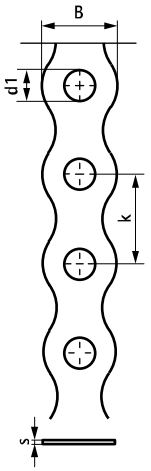

Complementary

420 BIS Suspension Eye (Female Threaded)
433 BIS Suspension Eye - Wood Thread
434 BIS Suspension Eye - Metric

Complementary

589 BIS Shouldered Masonry Nail
497 BIS HK

EN-SG 02/2022- Subject to modifications

BIS Uniblock

(K 12 10)



083 8 000



083 8 002



083 8 001

Features and Benefits

- maximum functionality and rapidity on installation
- metal locking devices for steel strip banding system
- for installation of flexible tubes in the heating, ventilation and air conditioning industry
- the unique one piece locking device provides very fast clamping in a few seconds
- material: suspension band of stainless steel; traction screws of steel, zinc plated

Part No.	Model	Pack 1	Pack 2
0838000	30m steel strip	1	-
0838001	Set 'Autoblock' 3m + 8 screws	1	-

BIS Wall Plate 670

(K 15 05)

fixing to wall or ceiling



Features and Benefits

- slots at 90° to each other to simplify fixing
- with resistance welded connection nut
- material: steel
- zinc plated

Part No.	G	H (mm)	$F_{a,z}$ (N)	Pack 1	Pack 2
6703006	M6	6	2,500	50	250
6703008	M8	8	2,500	50	250
6703009	M8/10	18	2,500	50	200
6703010	M10	10	2,500	50	200
6703016	M16	13	2,500	50	250
6703021	G½"	15	2,500	50	200

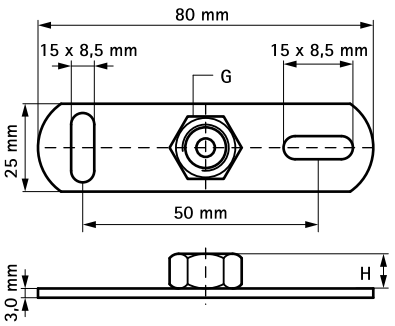

Complementary

446 BIS Stud Bolt

EN-SG 02/2022- Subject to modifications

BIS Wall Plate

(K 15 07)

fixing to wall or ceiling



Features and Benefits

- with resistance welded connection nut
- zinc plated
- material: steel

Part No.	G	H (mm)	$F_{a,z}$ (N)	Pack 1
6709021	G½"	16	2,500	50

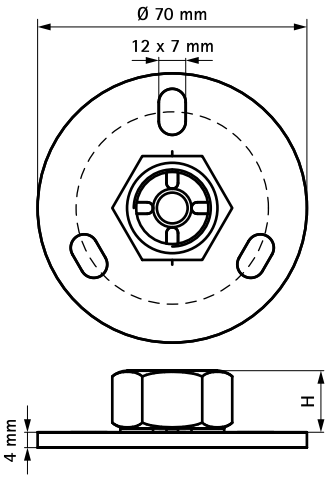

BIS Wall Plate CO_2 Welded (BUP1000)

(K 15 09)

fixing to wall or ceiling



Features and Benefits

- slots at 90° to each other to simplify fixing
- with CO_2 welded connection nut
- material: steel
- surface protection:
  - product is part of the BIS UltraProtect® 1000 system
  - suitable for in- and outdoor applications
  - stands min. 1,000 hours salt spray test (max. 5% red rust) according to ISO 9227

Part No.	G	L	B (mm)	H (mm)	s (mm)	d1 (mm)	d2 (mm)	k (mm)	$F_{a,z}$ (N)	Pack 1
67198016	M16	145 mm	38	19.5	4	30 x 11	25 x 11	100	6,000	50
67198021	G½"	145 mm	38	21.5	4	30 x 11	25 x 11	100	4,000	50
67198033	G1"	145 mm	38	26.5	4	30 x 11	25 x 11	100	5,500	50

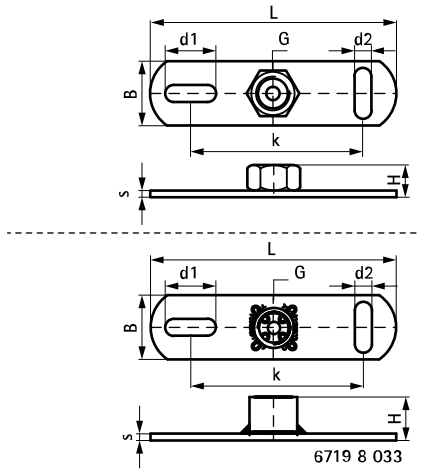

Complementary

445 BIS Stud Bolt (BUP1000)

EN-SG 02/2022- Subject to modifications

BIS Wall Plate Resistance Welded

(K 15 10)

fixing to wall or ceiling



Features and Benefits

- slots at 90° to each other to simplify fixing
- with resistance welded connection nut
- material: steel
- zinc plated

Part No.	G	L	B (mm)	H (mm)	s (mm)	d1 (mm)	d2 (mm)	k (mm)	$F_{a,z}$ (N)	Pack 1
6713008	M8	145 mm	38	8	4	30 x 11	25 x 11	100	3,200	40
6713010	M10	145 mm	38	10	4	30 x 11	25 x 11	100	3,500	40
6713012	M12	145 mm	38	10	4	30 x 11	25 x 11	100	3,500	40
6713016	M16	145 mm	38	13	4	30 x 11	25 x 11	100	3,800	50
6713021	G½"	145 mm	38	15	4	30 x 11	25 x 11	100	3,800	50

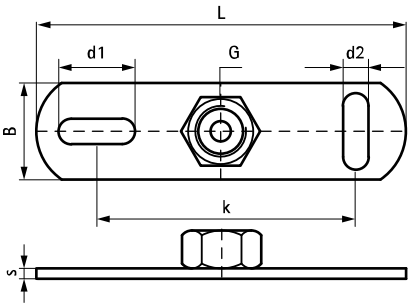

Complementary

446 BIS Stud Bolt

EN-SG 02/2022- Subject to modifications

BIS Wall Plate Resistance Welded (BUP1000)

(K 15 11)

fixing to wall or ceiling



Features and Benefits

- slots at 90° to each other to simplify fixing
- with resistance welded connection nut
- material: steel
- surface protection:
  - product is part of the BIS UltraProtect® 1000 system
  - suitable for in- and outdoor applications
  - stands min. 1,000 hours salt spray test (max. 5% red rust) according to ISO 9227

Part No.	G	L	B (mm)	s (mm)	d1 (mm)	d2 (mm)	k (mm)	$F_{a,z}$ (N)	Pack 1
6708008	M8	80 mm	25	3	15 x 8.5	15 x 8.5	50	2,500	50
6708010	M10	80 mm	25	3	15 x 8.5	15 x 8.5	50	2,500	50

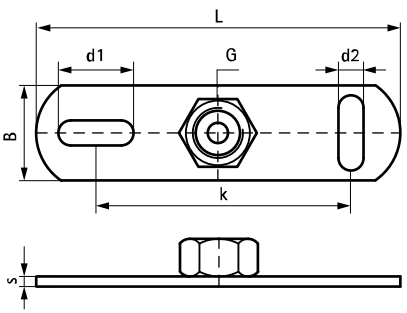

Complementary

445 BIS Stud Bolt (BUP1000)

EN-SG 02/2022- Subject to modifications

BIS Wall Plate CO_2 Welded

(K 15 12)

fixing to wall or ceiling



6719016 6719027

Features and Benefits

- slots at 90° to each other to simplify fixing
- with CO_2 welded connection nut
- material: steel
- zinc plated

Part No.	G	L	B (mm)	H (mm)	s (mm)	d1 (mm)	d2 (mm)	k (mm)	$F_{a,z}$ (N)	Pack 1
6719012	M12	145 mm	38	14	4	30 x 11	25 x 11	100	6,000	50
6719016	M16	145 mm	38	17	4	30 x 11	25 x 11	100	6,000	50
6719021	G½"	145 mm	38	19	4	30 x 11	25 x 11	100	4,000	50
6719027	G¾"	145 mm	38	22	4	30 x 11	25 x 11	100	5,000	50
6719033	G1"	145 mm	38	24	4	30 x 11	25 x 11	100	5,500	50

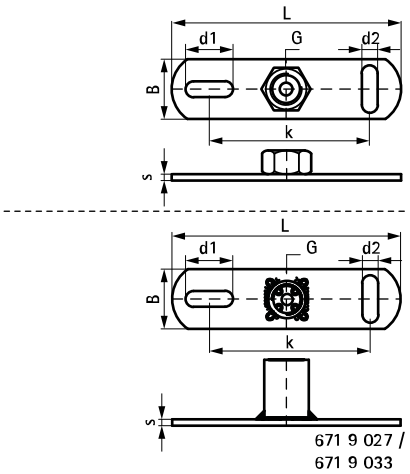

671 9 027 /
671 9 033

Complementary

446 BIS Stud Bolt
450 BIS Threaded Tube

BIS Beam Clamps Electrical

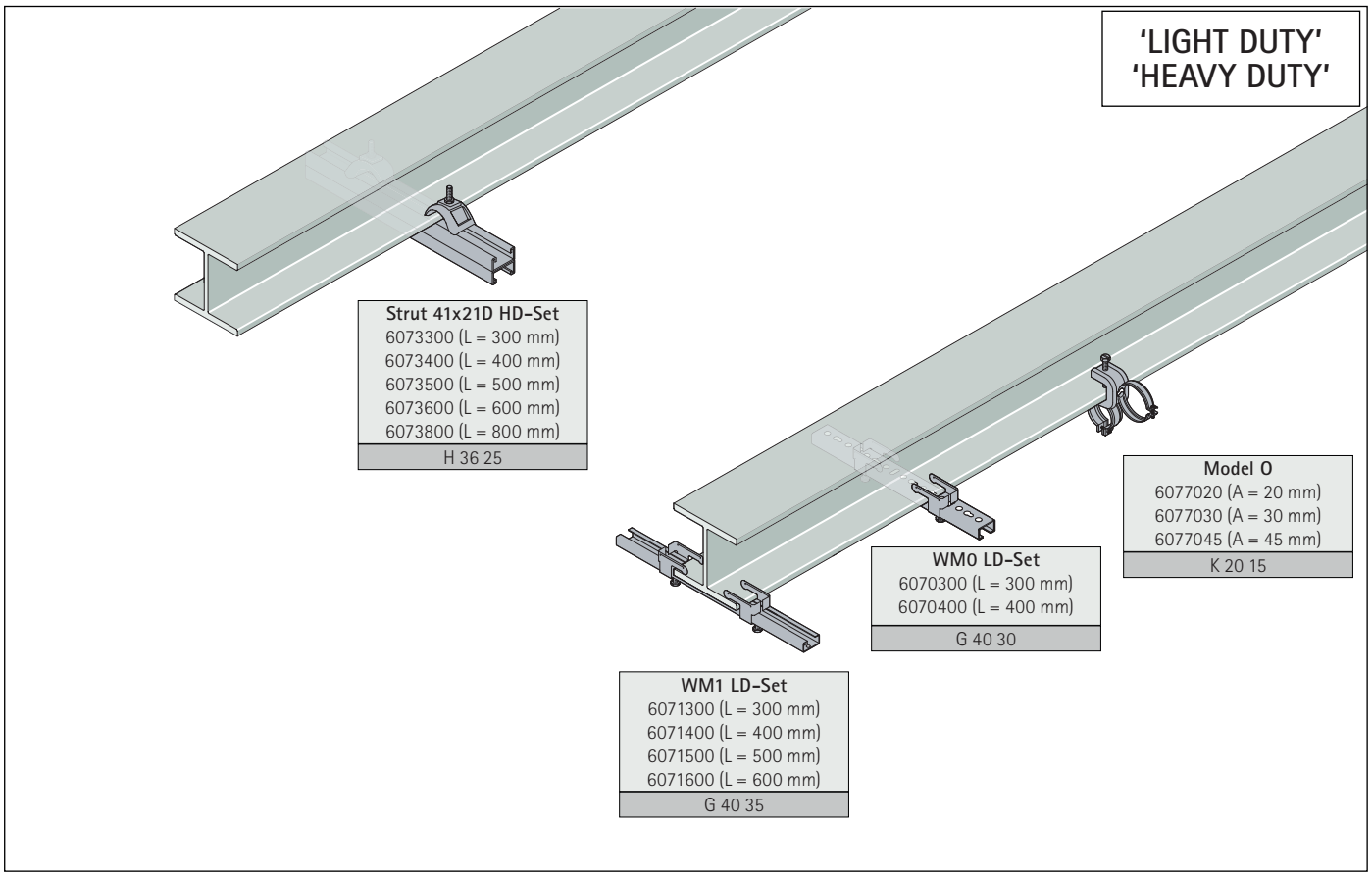

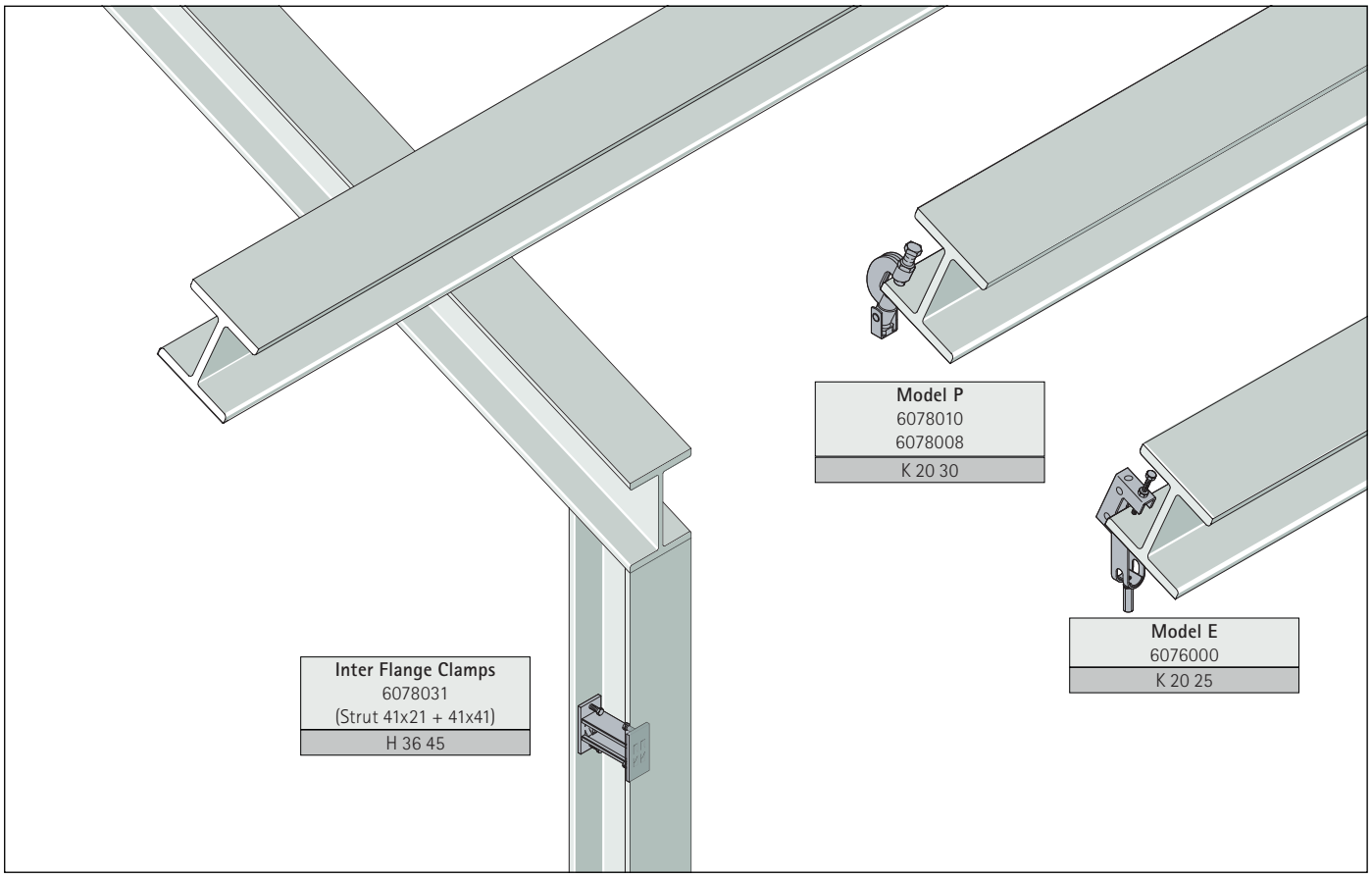

EN-SG 02/2022- Subject to modifications

BIS Wall Plate 672 (Male Thread)

(K 15 15)

fixing to wall or ceiling



Features and Benefits

- slots at 90° to each other to simplify fixing
- with resistance welded male stud bolt
- material: steel
- zinc plated

Part No.	G	H (mm)	Lm1 (mm)	$F_{a,z}$ (N)	Pack 1	Pack 2
6723006	M6	28	25	2,500	50	250
6723108	M8	13	10	2,500	50	250
6723008	M8	28	25	2,500	50	250
6723110	M10	15	12	2,500	50	250
6723010	M10	38	35	2,500	50	150

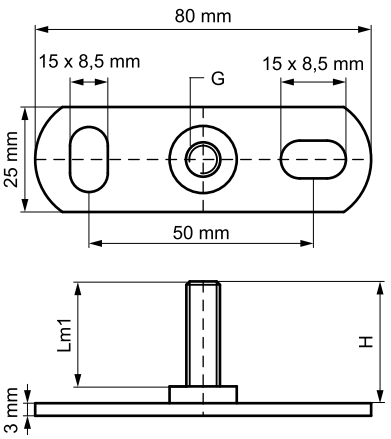

BIS Duplo Fixing Plate

(K 15 20)

double fixing of 2 clamps to wall or ceiling



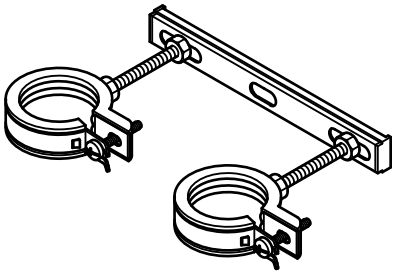

Features and Benefits

- 2 hexagon nuts M8 are infinitely adjustable in center distance
- attach 2 pipes on a wall or ceiling with only one drill hole
- material: metal parts made of steel; plastic housing made of PP (polypropylene), white
- zinc plated

Part No.	G	L	H (mm)	b x s (mm)	k (mm)	$F_{a,z}$ (N)	Pack 1
6743001	M8	116.5 mm	10.5	20 x 1.0	60 - 100	290	50
6743002	M8	146.4 mm	11.0	20 x 2.0	90 - 130	590	50
Max. allowed load: based on using largest value for k for suspension.							

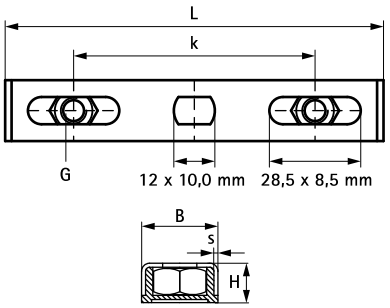

Complementary

446 BIS Stud Bolt

EN-SG 02/2022- Subject to modifications

BIS Double Wall Plate

(K 15 25)

double fixing of 2 clamps to wall or ceiling



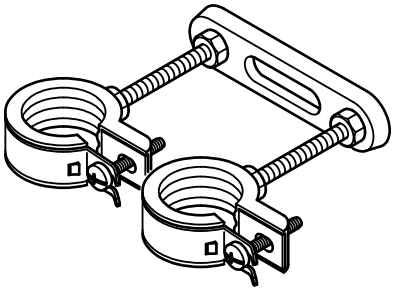

Features and Benefits

- with fixed centre distance
- material: steel
- zinc plated

Part No.	G	L	k (mm)	$F_{a,z}$ (N)	Pack 1	Pack 2
6748055	M8	75 mm	55	1,250	50	500
6748065	M8	85 mm	65	1,010	50	500
6748085	M8	105 mm	85	730	50	500
6748105	M8	125 mm	105	420	50	500
6748150	M8	170 mm	150	270	50	500
Max. allowed load: both fixing points are equally loaded.						

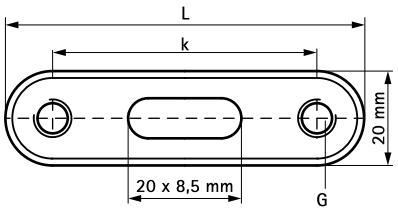

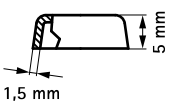

Complementary
446 BIS Stud Bolt

Alternative
392 BIS Duplo Fixing Plate

EN-SG 02/2022- Subject to modifications

BIS Universal Cube

(K 18 05)

assembly cube for fastenings



Features and Benefits

- universal cube with four threaded holes for fastening applications
- zinc plated

Part No.	G	L	B (mm)	H (mm)	Pack 1	Pack 2
6443908	M8	17 mm	30	19	50	200

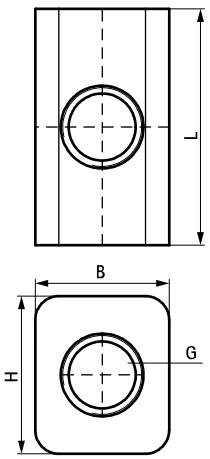

Complementary

429 BIS Hexagon Nut
417 BIS Hanger Bolt
446 BIS Stud Bolt

EN-SG 02/2022- Subject to modifications

BIS Beam Clamp Model C (BUP1000)

(K 20 03)

for flange



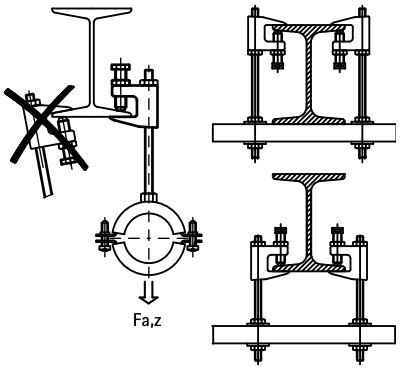

Features and Benefits

- for a solid fixing to steel construction without the need for welding or drilling
- according to VdS-regulations an additional safety strap should be used when supporting pipes above DN65
- surface protection:
  - product is part of the BIS UltraProtect® 1000 system
  - suitable for in- and outdoor applications
  - stands min. 1,000 hours salt spray test (max. 5% red rust) according to ISO 9227

FM APPROVED VdS UL LISTED EX28476

Part No.	Code	A (mm)	Model	R	G	B (mm)	H (mm)	SW1 (mm)	$F_{a,z}$ (N)	$F_{a,z}$ (kg)	FM	VdS	Pack 1
6008008	TK10-M8	≤23	BIS Beam Clamp model C	M8	M10	50	45	17	2,500	250	-	VdS	50
6008010	TKN10-M10	≤20	BIS Beam Clamp model C	M10	M10	44	42	17	2,500	250	FM	VdS	50
6008910	TKN10-D11	≤20	BIS Beam Clamp model C	Ø 11 mm	M10	44	42	17	2,500	250	FM	VdS	50

Tighten the set screw with hand and apply a further 1/2 turn with a spanner.Tighten counter nut with hand and apply a further 1/8 turn with a spanner.Certificates available on request.

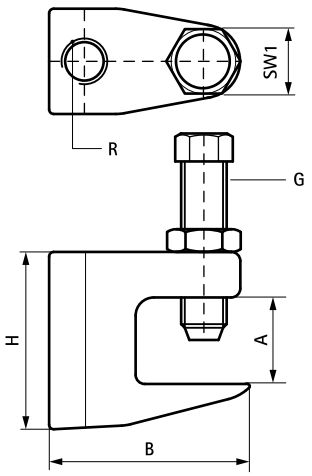

BIS Beam Clamp Model C

(K 20 05)

for flange up to 28 mm



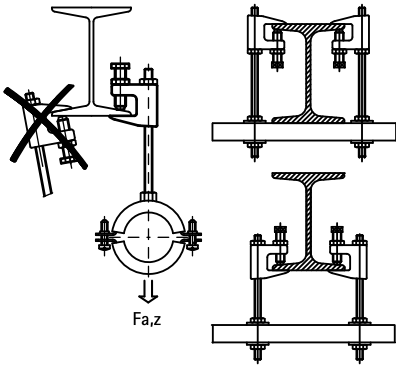

Features and Benefits

- for a solid fixing to steel construction without the need for welding or drilling
- according to VdS-regulations an additional safety strap should be used when supporting pipes above DN65
- bolt with hexagon head according to DIN 933 strength class 8.8, screw point with cup ring according to EN ISO 4753 and lock nut
- material: beam clamp made of cast iron; bolt of hardened steel, nut of steel, zinc plated
- see also: BIS Safety Strap (page K 20 06)

FM APPROVED VdS UL LISTED EX28476

Part No.	Code	A (mm)	R	G	B (mm)	H (mm)	SW1 (mm)	$F_{a,z}$ (N)	FM	UL	VdS	Pack 1
6003206	TKN8-M6	≤18	M6	M8	38	35	13	1,200	-	-	-	50
6003006	TK10-M6	≤23	M6	M10	50	45	17	2,500	-	-	-	50
6003208	TKN8-M8	≤18	M8	M8	38	35	13	1,200	-	-	VdS	50
6003008	TK10-M8	≤23	M8	M10	50	45	17	2,500	-	-	VdS	50
6003010	TKN10-M10	≤20	M10	M10	44	42	17	2,500	FM	UL	VdS	50
6003310	TK16-M10	≤28	M10	M12	58	58	19	2,500	FM	UL	VdS	25
6003012	TK12-M12	≤26	M12	M10	58	54	17	3,500	FM	UL	VdS	25
6003016	TK16-M16	≤28	M16	M12	58	58	19	5,500	FM	UL	VdS	25
6003905	TKN8-D9	≤18	Ø 9 mm	M8	38	35	13	1,200	-	-	VdS	50
6003906	-	≤18	Ø 7 mm	M8	38	35	13	1,200	-	-	-	50
6003908	TK10-D9	≤23	Ø 9 mm	M10	50	45	17	2,500	-	-	VdS	50
6003910	TKN10-D11	≤20	Ø 11 mm	M10	44	42	17	2,500	FM	UL	VdS	50
6003912	TK12-D13	≤26	Ø 13 mm	M10	58	54	17	3,500	FM	UL	VdS	25

Tighten the set screw with hand and apply a further 1/2 turn with a spanner.Tighten counter nut with hand and apply a further 1/8 turn with a spanner.Certificates available on request.

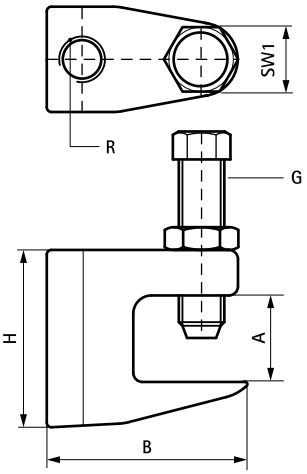

Complementary

397 BIS Safety Strap for Beam Clamp Model C

EN-SG 02/2022- Subject to modifications

BIS Safety Strap for Beam Clamp Model C

(K 20 06)

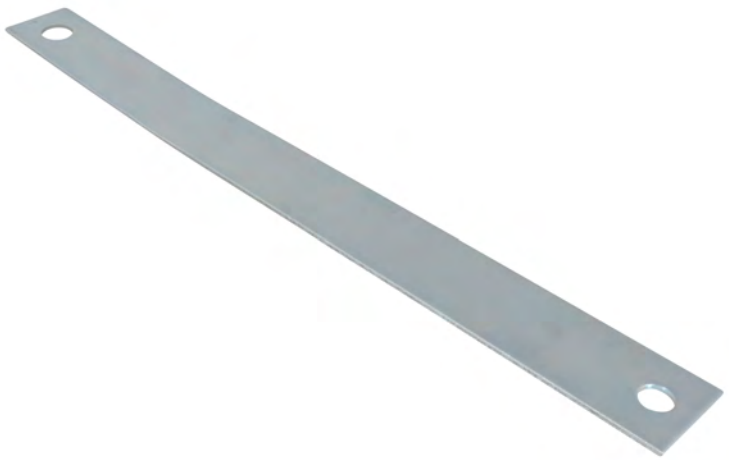

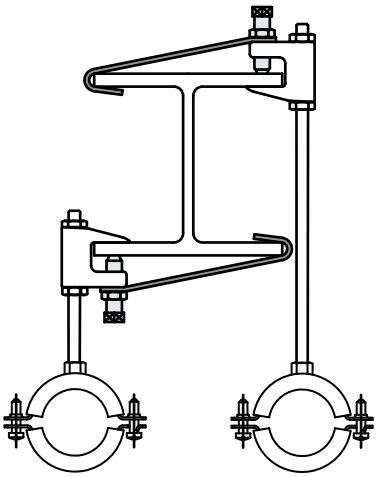

Features and Benefits

- Safety Strap needs to be bent by hand
- material: steel
- pre-galvanized
- see also: BIS Beam Clamps Model C (page K 20 05)

Part No.	R	R2	L	B (mm)	Pack 1
6015110	Ø 10.5 mm	Ø 12.5 mm	350 mm	25	25
6015112	Ø 12.5 mm	Ø 16.5 mm	400 mm	40	25

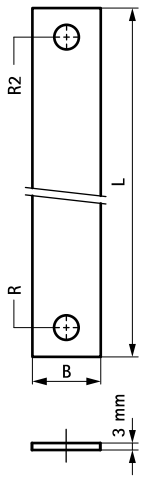

Complementary

396 BIS Beam Clamp Model C

EN-SG 02/2022- Subject to modifications

BIS Beam Clamp Model O

(K 20 15)

for flange up to 45 mm



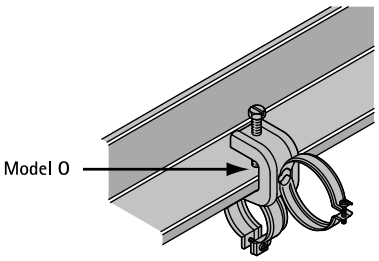

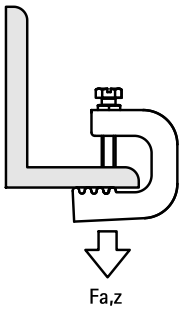

Features and Benefits

- for a solid fixing to steel construction without the need for welding or drilling
- up to flange thickness 45 mm
- with hole Ø 14 mm for fixing of BIS IC-clamp, stud bolt or S-Hook
- with serration for increased security
- material: steel
- surface treatment: Dacromet
- see also: IC-clamp (for conduit or cable); square nut (for threaded rod) or protective cap (to avoid damaging of protected surfaces)

Part No.	A (mm)	$F_{a,z}$ (N)	Pack 1
6077020	≤20	1,100	25
6077030	≤30	1,200	25
6077045	≤45	1,300	25

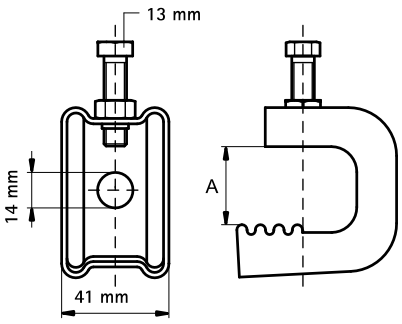

Complementary

446 BIS Stud Bolt

399 BIS Beam Clamp Model O - Accessories

EN-SG 02/2022- Subject to modifications

BIS Beam Clamp Model O - Accessories

(K 20 20)

accessories for BIS Beam Clamp Model O



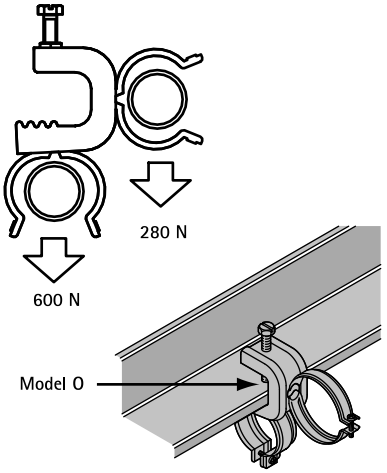

Features and Benefits

- Part No. 60772XX: for fixing of clamps or cables to BIS Beam clamp model 'O' (Part No. 60770XX)
- material: clamp and square nut made of steel
- Part No. 607 7 2XX: surface treatment: Dacromet

Part No.	D (mm)	Model	G	b x s (mm)	$F_{a,z}$ (N)	$F_{a,z\ 2}$ (N)	Pack 1	Pack 2
6077220	16.0 - 20.0	BIS IC-Clamp	M5	16 x 1.5	600	280	50	200
6077225	20.4 - 25.0	BIS IC-Clamp	M5	16 x 1.5	600	280	50	200
6077231	26.9 - 31.8	BIS IC-Clamp	M5	16 x 1.5	600	280	50	200
6077238	33.7 - 38.0	BIS IC-Clamp	M6	20 x 1.5	600	280	50	200
6077244	40.0 - 44.5	BIS IC-Clamp	M6	20 x 1.5	600	280	50	200

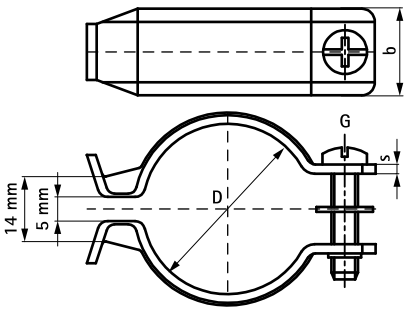

EN-SG 02/2022- Subject to modifications

BIS Swivel Beam Clamp Model P

(K 20 30)

for flange up to 17 mm



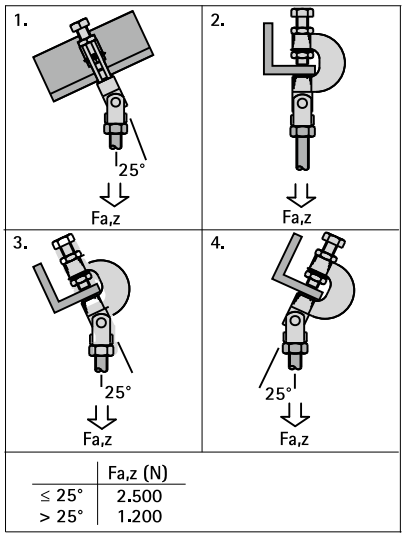

	Fa,z (N)
≤ 25°	2.500
> 25°	1.200

Features and Benefits

- multidirectional clamp
- for suspension on pitched flanges without welding or drilling
- up to flange thickness 17 mm
- according to VdS-regulations an additional safety strap should be used when supporting pipes above DN65
- articulation to 45° sideways, 90° forwards
- safety strap is obliged with VdS applications 1 and 4
- material: steel
- zinc plated
- with VdS-approval - certificate number G 4020003

FM APPROVED

VdS Cert.Nr. G 4020003

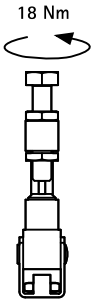

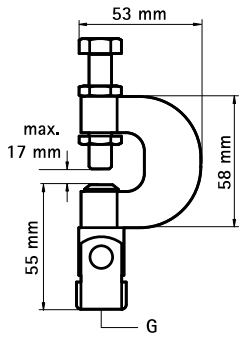

Part No.	Code	A (mm)	G	FM	VdS	Pack 1
6078008	HFLS-M8	≤17	M8	-	VdS	10
6078010	HFLS	≤17	M10	FM	VdS	25
FM and VdS Approval to 25° articulation.						

Complementary

446 BIS Stud Bolt

401 BIS Safety Strap for Beam Clamp Model P

EN-SG 02/2022- Subject to modifications

BIS Safety Strap for Beam Clamp Model P

(K 20 31)

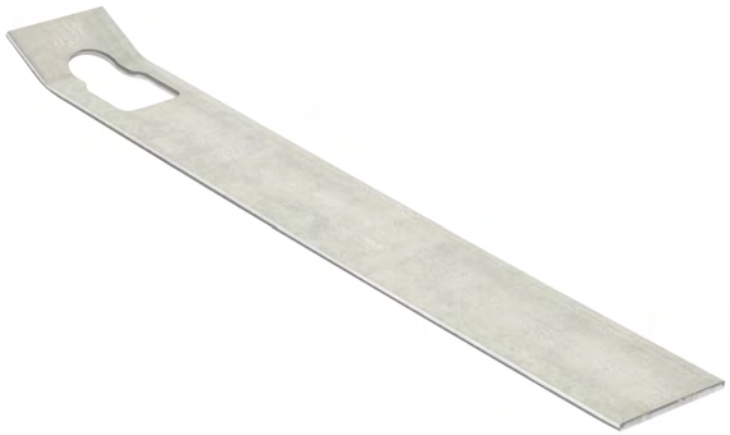

Features and Benefits

- Safety Strap needs to be bent by hand
- material: steel
- pre-galvanized
- see also: BIS Beam Clamps Model P (page K 20 30)

Part No.	R	L	B (mm)	H (mm)	s (mm)	a (°)	Pack 1
6015210	44 mm x 24 mm	303 mm	40	12.5	3.0	25	10

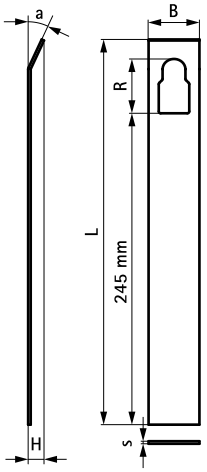

EN-SG 02/2022- Subject to modifications

Complementary

400 BIS Swivel Beam Clamp Model P

BIS Roofing Sheet Hanger (BUP1000)

(K 25 03)

fixing to profiled roofing sheet



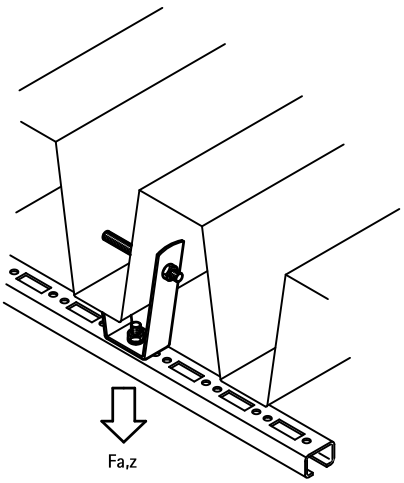

Features and Benefits

- for mounting to profiled roofing sheet by means of pop rivets or threaded rod
- for applications in environments requiring increased corrosion resistance
- variable distance to roof hanger by using a threaded rod
- material: steel
- surface protection:
  - product is part of the BIS UltraProtect® 1000 system
  - suitable for in- and outdoor applications
  - stands min. 1,000 hours salt spray test (max. 5% red rust) according to ISO 9227

Part No.	G	$F_{a,z}$ (N)	Pack 1
6785801	Ø 13.0 mm	2,300	50
Maximum load ($F_{a,z}$) depends on the load capacity of the trapezium shaped roofing sheet. Before mounting, the roof load capacity has to be confirmed by a structural engineer.			

VdS
Cert.Nr.
G 4070033

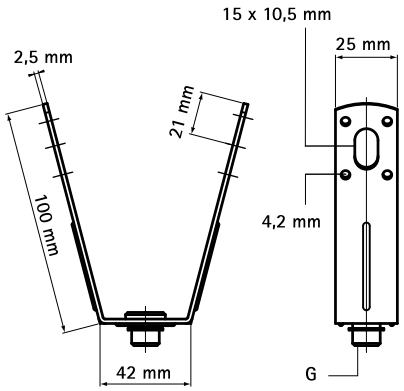

EN-SG 02/2022- Subject to modifications

BIS Roofing Sheet Hanger VdS

(K 25 05)

fixing to profiled roofing sheet



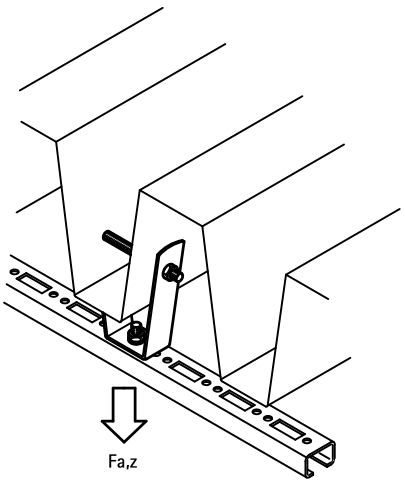

Features and Benefits

- for mounting to profiled roofing sheet by means of pop rivets or threaded rod
- for fixing pipes up to DN 50 in stationary water extinguishing systems to profiled roofing sheets according to VdS guidelines
- variable distance to roof hanger by using a threaded rod
- material: steel
- pre-galvanized
- with VdS-approval - certificate number G 4070033

Part No.	G	$F_{a,z}$ (N)	VdS	Pack 1
6785001	Ø 13.0 mm	2,300	VdS	50
6785008	M8	2,300	VdS	50
6785010	M10	2,300	VdS	50

Maximum load ($F_{a,z}$) depends on the load capacity of the trapezium shaped roofing sheet. Before mounting, the roof load capacity has to be confirmed by a structural engineer.

VdS
Cert.Nr.
G 4070033

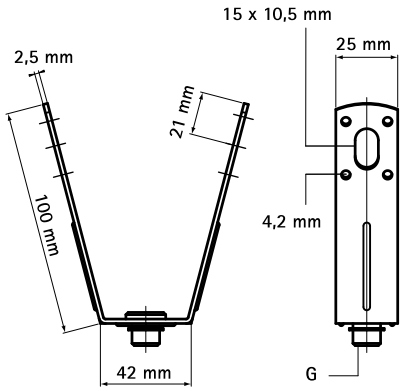

Complementary

405 BIS Hole Punching Plier
429 BIS Hexagon Nut
424 BIS Hexagon Head Bolt

BIS Roofing Sheet Hanger

(K 25 07)

fixing to profiled roofing sheet



Features and Benefits

- for mounting to profiled roofing sheet by means of pop rivets or threaded rod
- variable distance to roof hanger by using a threaded rod
- material: steel
- pre-galvanized

Part No.	L	B (mm)	B2 (mm)	b3 (mm)	H (mm)	h (mm)	h2 (mm)	b (mm)	s (mm)	d1 (mm)	$F_{a,z}$ (N)	Pack 1
6785101	25 mm	97	82	38	99	96	76	25	2	Ø 13.0	1,700	50

Maximum load ($F_{a,z}$) depends on the load capacity of the trapezium shaped roofing sheet. Before mounting, the roof load capacity has to be confirmed by a structural engineer.

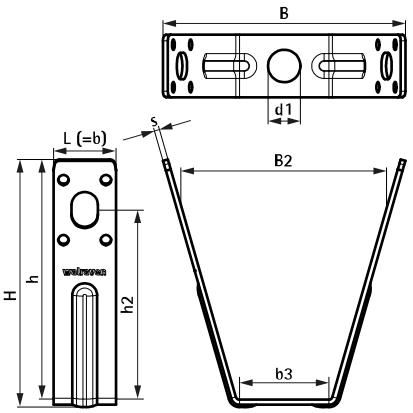

Complementary

448 BIS Threaded Rod

EN-SG 02/2022- Subject to modifications

BIS Hole Punching Plier

(K 25 10)

accessories for BIS Roofing sheet hangers



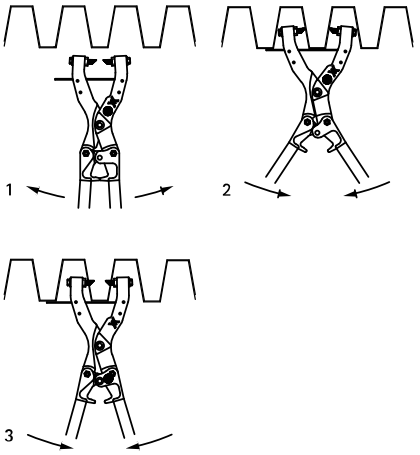

Features and Benefits

- for trapezium shaped roofing sheets up to max. 1.5 mm thickness
- robust and durable design
- replaceable punching pins, Part No. 6920013
- supplied with Ø 10.5 mm punching pins

Part No.	Model	Minimum Jaw Opening (mm)	Maximum Jaw Opening (mm)	Pack 1
6920012	BIS Hole Punching Pliers	25	90	1
6920017	BIS Hole Punching Pliers L	80	170	1

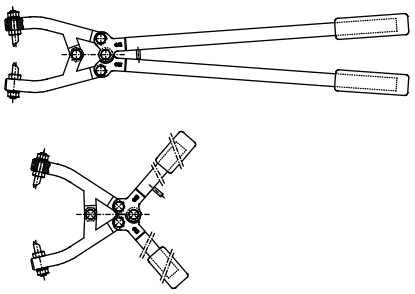

Complementary

406 BIS Replacement Punching Pins
404 BIS Roofing Sheet Hanger

EN-SG 02/2022- Subject to modifications

BIS Replacement Punching Pins

(K 25 12)



Features and Benefits

- replacement punching pins for BIS Hole Punching Pliers

Part No.	Model	G	L	HØ (mm)	SW1 (mm)	For	Pack 1
6920013	Set of two pins	M10	61 mm	20	17	6920012 & 6920017	1

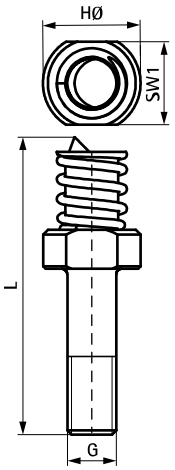

EN-SG 02/2022- Subject to modifications

BIS Roof Suspension Assembly

(K 25 15)

fixing to pitched roof



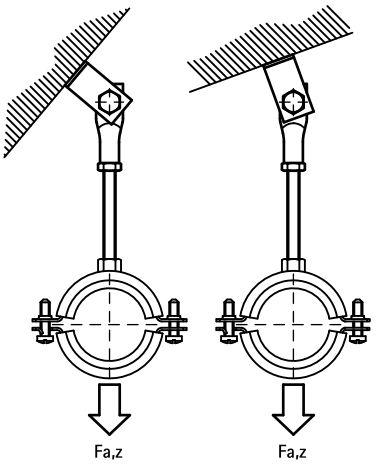

Features and Benefits

- for fixing to pitched roof
- adjustable to suit the slope of any pitched roof
- material: steel
- zinc plated

Part No.	G	$F_{a,z}$ (N)	Pack 1
6788008	M8	2,580	50

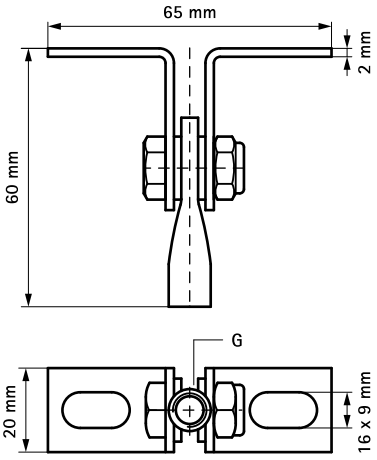

EN-SG 02/2022- Subject to modifications

BIS Height Adjuster

(K 25 25)



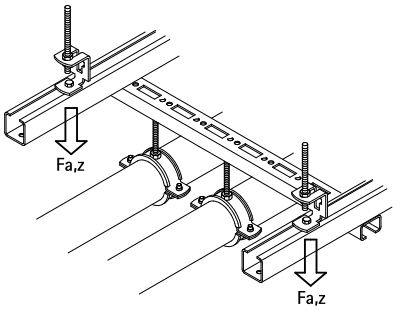

Features and Benefits

- 30 mm continuously variable height adjustable
- for stud bolt M8 or M10
- can also be used as rail suspension element
- material: steel 1.0332
- zinc plated

Part No.	R	$F_{a,z}$ (N)	Pack 1
6793810	M8 - M10	1,690	50

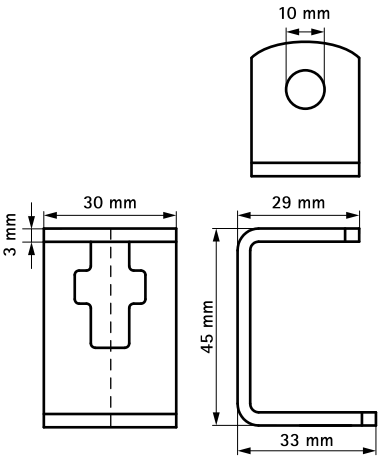

EN-SG 02/2022- Subject to modifications

BIS Clamp for Corrugated Sheet

(K 27 05)



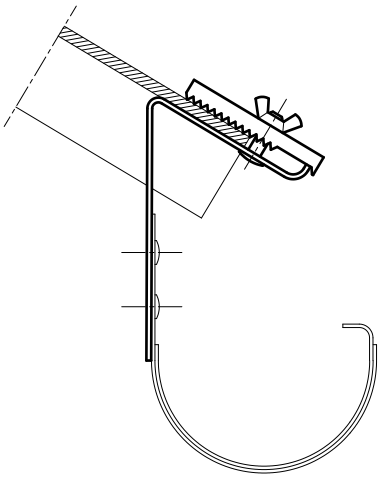

Features and Benefits

- for a tightened fixing of gutter to corrugated sheets
- no damage to corrugated sheet (suitable for every thickness)
- material: steel
- hot dip galvanized

Part No.	Pack 1
5191000	50

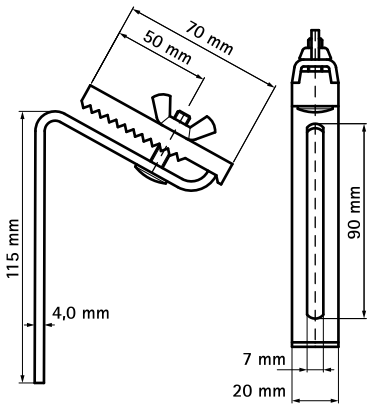

BISMAT® Rail

(K 30 05)

fixing to wall or ceiling





Features and Benefits

- universal system for pipe-fixing in wall opening, wall corners, etc.
- with continuous hole pattern, designed for centre distance of sanitary armature
- material: steel
- pre-galvanized

Part No.	L	BndL
0835503	2 m	50

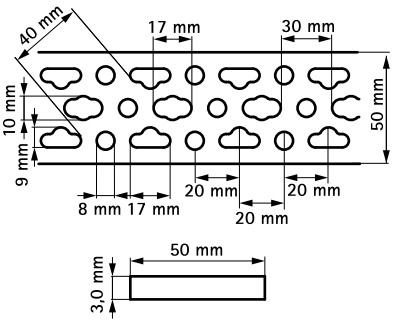

Complementary

411 BISMAT® Rail - Plier
412 BISMAT® Rail - Backing Plate
413 BISMAT® Rail - Sound Shield

Complementary

414 BISMAT® Rail - Sound Cap
415 BISMAT® Rail - Mounting Clamp

EN-SG 02/2022- Subject to modifications

BISMAT® Rail - Plier

(K 30 10)

accessories of BISMAT® Rail

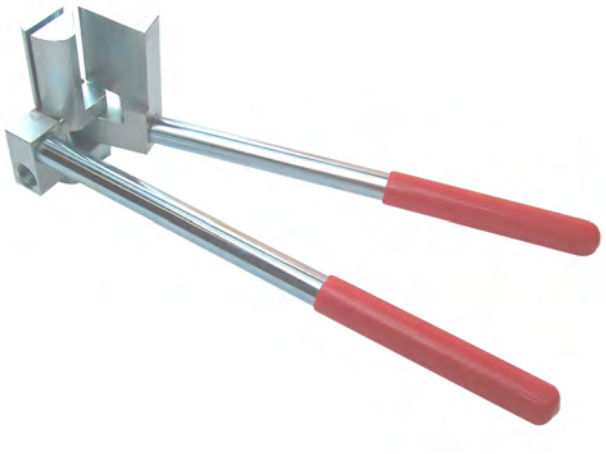



Features and Benefits

- for bending BISMAT® Rail to any required angle
- robust construction

Part No.	For Rail	Pack 1
6920050	BISMAT® Rail	1

BISMAT® Rail – Backing Plate

(K 30 20)

accessories of BISMAT® Rail

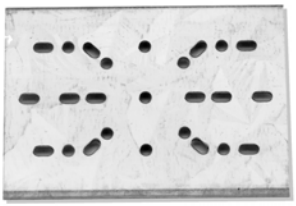



Features and Benefits

- for a secure fixing of sanitary wall plates to BISMAT® Rail
- pre-galvanized
- material: steel

Part No.	For Rail	Pack 1
0835000	BISMAT® Rail	50

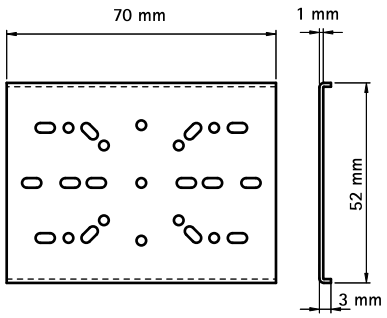

Complementary
410 BISMAT® Rail

EN-SG 02/2022- Subject to modifications

BISMAT® Rail - Sound Shield

(K 30 25)

accessories of BISMAT® Rail





Features and Benefits

- to avoid noise transmission of sanitary wall plates
- material: ABS and EPDM
- sound insulating lining according DIN 4109

Part No.	For Rail	Pack 1
0835001	BISMAT® Rail	20

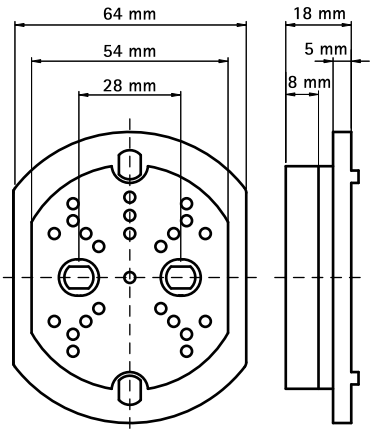

Complementary

414 BISMAT® Rail - Sound Cap

EN-SG 02/2022- Subject to modifications

BISMAT® Rail – Sound Cap

(K 30 40)

accessories of BISMAT® Rail





Features and Benefits

- sound cap for sanitary wall plates
- material: EPP

Part No.	For Rail	Pack 1
0835006	BISMAT® Rail	20

EN-SG 02/2022- Subject to modifications

BISMAT® Rail - Mounting Clamp

(K 30 45)

accessories of BISMAT® Rail



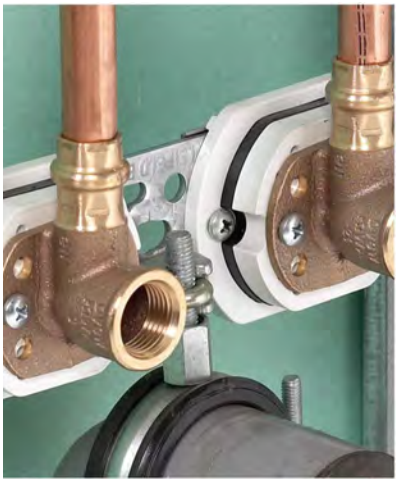

Features and Benefits

- to fix stud bolt M6 or M8 to BISMAT® Rail
- material: steel

(e.g. to fix a clamp or siphon)

Part No.	For Rail	Pack 1
0835002	BISMAT® Rail	50

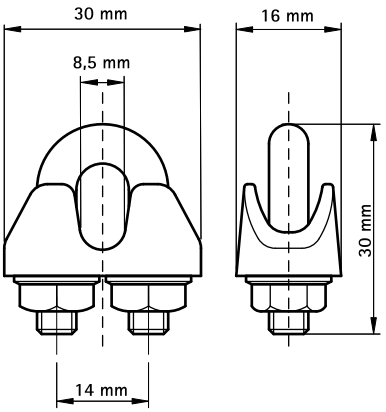

Complementary

446 BIS Stud Bolt

EN-SG 02/2022- Subject to modifications

BIS Hanger Bolt (BUP1000)

(K 40 04)

fixing to wall or ceiling



Features and Benefits

- with hexagon for fine setting
- material: steel
- surface protection:
  - product is part of the BIS UltraProtect® 1000 system
  - suitable for in- and outdoor applications
  - stands min. 1,000 hours salt spray test (max. 5% red rust) according to ISO 9227

Part No.	G	L	Lh (mm)	Lm1 (mm)	PØ (mm)	SW1 (mm)	Tx	Pack 1	Pack 2
62680820	M8	200 mm	50	50	10	6	25	50	250
62681010	M10	100 mm	50	40	12	8	25	50	500
62681020	M10	200 mm	55	40	12	8	25	50	250

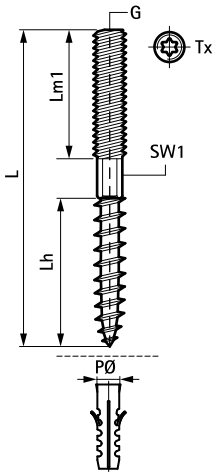

Complementary

510 BIS Star Plug

EN-SG 02/2022- Subject to modifications

BIS Hanger Bolt

(K 40 05)

fixing to wall or ceiling



Features and Benefits

- with hexagon for fine setting
- material: steel
- zinc plated

Part No.	G	L	Lh (mm)	Lm1 (mm)	PØ (mm)	SW1 (mm)	Tx	Pack 1	Pack 2
6263606	M6	60 mm	35	25	8	-	-	100	1,000
6263609	M6	90 mm	30	30	8	5	-	100	1,000
6263612	M6	120 mm	30	30	8	5	-	100	1,000
6263615	M6	150 mm	30	45	8	5	-	100	1,000
6263805	M8	50 mm	35	15	10	6	25	100	1,000
6263806	M8	60 mm	30	20	10	6	25	100	1,000
6263807	M8	70 mm						100	1,400
6263808	M8	80 mm	35	35	10	6	25	100	1,000
6263809	M8	90 mm						100	1,000
6263810	M8	100 mm	50	40	10	6	25	100	1,000
6263812	M8	120 mm	50	40	10	6	25	100	500
6263815	M8	150 mm	50	50	10	6	25	50	500
6263816	M8	160 mm	60	40	10	6	25	50	250
6263818	M8	180 mm	60	40	10	6	25	50	250
6263820	M8	200 mm	50	50	10	6	25	50	250
6283006	M10	60 mm	35	15	12	8	25	50	500
6283008	M10	80 mm	35	35	12	8	25	50	500
6283010	M10	100 mm	50	40	12	8	25	50	500
6283011	M10	110 mm	50	40	12	8	25	50	500
6283012	M10	120 mm	50	40	12	8	25	50	500
6283014	M10	140 mm	50	40	12	8	25	50	250
6283018	M10	180 mm	55	60	12	8	25	50	250
6283020	M10	200 mm	55	40	12	8	25	50	250
6283210	M12	100 mm	50	30	12	10	30	50	-
6283212	M12	120 mm	60	45	12	10	30	50	250
6283214	M12	140 mm	60	60	12	10	30	50	-

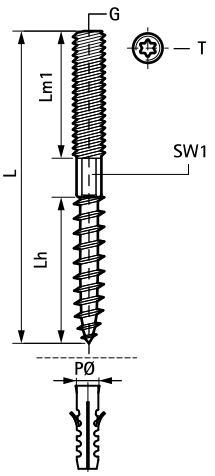

Complementary

510 BIS Star Plug

EN-SG 02/2022- Subject to modifications

BIS Threaded Shoulder Wood Screw Model A

(K 40 10)

fixing to wall or ceiling

985



Features and Benefits

- material: steel
- zinc plated

Part No.	G	L	Lh (mm)	Lm1 (mm)	PØ (mm)	Pack 1	Pack 2
6353625	M6	25 mm	20	8	8	100	3,000
6353635	M6	35 mm	25	8	8	100	2,000
6353650	M6	50 mm	30	6	8	100	1,800
6353660	M6	60 mm	40	6	8	100	1,000
6353680	M6	80 mm	50	6	8	100	500
6353740	M7B	40 mm	23	5	8	100	1,200
6353750	M7B	50 mm	40	5	8	100	1,000
6353760	M7B	60 mm	40	5	8	100	1,000
6353770	M7B	70 mm	63	6	8	100	1,000
6353780	M7B	80 mm	40	5	8	100	1,000
6353835	M8	35 mm	30	10	10	100	1,200
6353850	M8	50 mm	30	8	10	100	-
6353860	M8	60 mm	30	8	10	100	1,000
6353880	M8	80 mm	30	8	10	100	-
6353890	M8	90 mm	50	12	10	100	500

M7B: pitch = M7 x 1 mm.

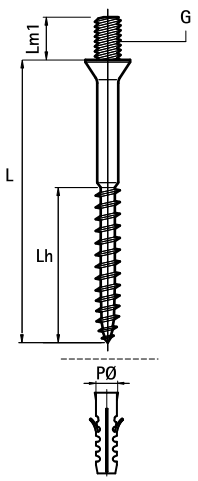

Complementary

510 BIS Star Plug

EN-SG 02/2022- Subject to modifications

BIS Wood Screw Special

(K 40 20)

fixing to wall or ceiling

627



Features and Benefits

- with combi slot
- material: steel
- zinc plated

Part No.	G	L	Lh (mm)	Lm1 (mm)	PØ (mm)	Pack 1	Pack 2
6356630	M6	30 mm	30	7	6	100	4,000
6356640	M6	40 mm	40	7	6	100	4,000
6356650	M6	50 mm	50	7	6	100	4,000
6356840	M8	40 mm	40	8	8	100	2,000
6356860	M8	60 mm	40	8	8	100	2,000
6356150	M10	50 mm	40	10	10	100	1,000
6356170	M10	70 mm	40	10	10	100	1,000

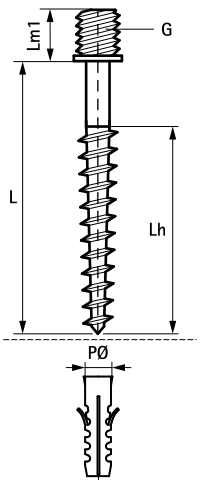

Complementary

510 BIS Star Plug

EN-SG 02/2022- Subject to modifications

BIS Suspension Eye (Female Threaded)

(K 45 05)

to make a suspension point

680



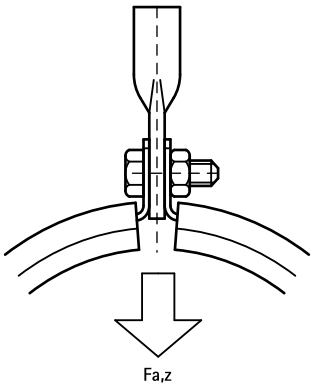

Features and Benefits

- closed design to maximize loading
- material: steel
- zinc plated

Part No.	G	L	b x s (mm)	d1 (mm)	$F_{a,z}$ (N)	Pack 1	Pack 2
6803008	M8	45 mm	13.5 x 3.5	Ø 8.5	2,580	100	500
6803010	M10	50 mm	17.0 x 4.0	Ø 10.5	3,540	100	500
6803012	M12	55 mm	20.5 x 5.5	Ø 10.5	7,750	100	500

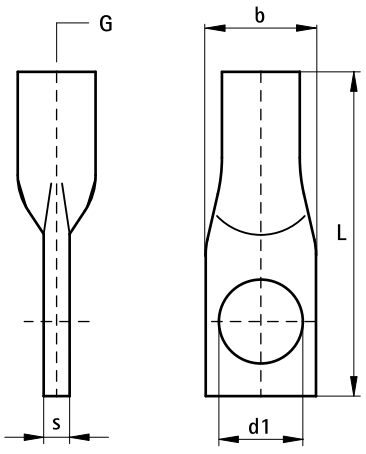

Complementary

446 BIS Stud Bolt

EN-SG 02/2022- Subject to modifications

BIS Suspension Eye

(K 45 10)

to make a suspension point

887



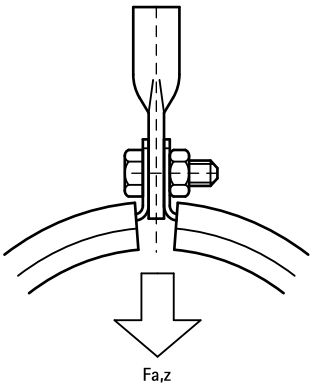

Features and Benefits

- material: Zamak (zinc/aluminium alloy)

Part No.	G	L	$F_{a,z}$ (N)	Pack 1
6803706	M6	15 mm	2,170	50
6803708	M8	15 mm	2,270	50

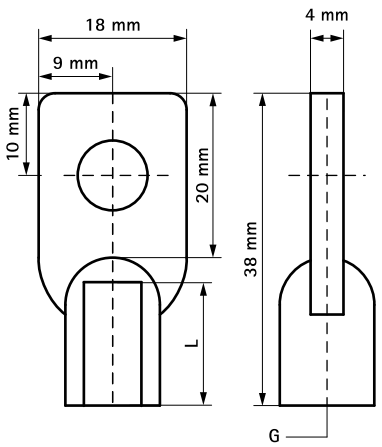

Complementary

446 BIS Stud Bolt

BIS Eye Bolt

(K 45 15)



Features and Benefits

- material: steel
- zinc plated

Part No.	G	d1 (mm)	Lm1 (mm)	Pack 1	Pack 2
6804825	M8	Ø 10.0	22	50	200
6804030	M10	Ø 15.0	30	25	100

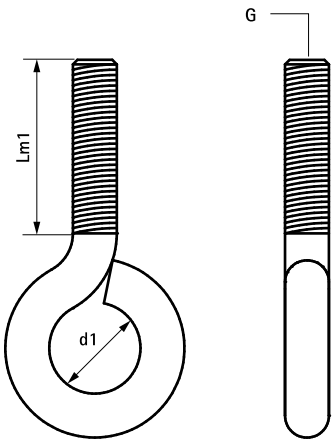

Complementary

470 WDI1 Drop-in Anchor
471 WDI1L Drop-in Anchor Lipped
473 WDI1 Setting Tool

Complementary

476 WBA Brass Anchor

EN-SG 02/2022- Subject to modifications

BIS Hexagon Head Bolt (BUP1000)

(K 45 19)



Features and Benefits

- material: steel
- surface protection:
  - product is part of the BIS UltraProtect® 1000 system
  - suitable for in- and outdoor applications
  - stands min. 1,000 hours salt spray test (max. 5% red rust) according to ISO 9227

Part No.	Type	G	L	s (mm)	Lm1 (mm)	SW1 (mm)	Pack 1
61480825	DIN 933	M8	30.3 mm	5.3	25	13	200
61480830	DIN 933	M8	35.3 mm	5.3	30	13	200
61480860	DIN 933	M8	65.3 mm	5.3	60	13	50
61480880	DIN 933	M8	85.3 mm	5.3	80	13	50
61481016	DIN 933	M10	22.4	6.4	16	17	200
61481025	DIN 933	M10	31.4 mm	6.4	25	17	200
61481030	DIN 933	M10	36.4 mm	6.4	30	17	200
61481060	DIN 933	M10	66.4 mm	6.4	60	17	100
61481080	DIN 933	M10	86.4 mm	6.4	80	17	100
61481225	DIN 933	M12	32.5 mm	7.5	25	19	100
61481230	DIN 933	M12	37.5 mm	7.5	30	19	100
61481260	DIN 933	M12	67.5 mm	7.5	60	19	100
61481280	DIN 933	M12	87.5 mm	7.5	80	19	100

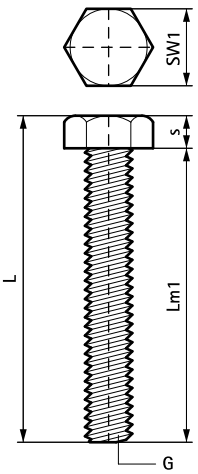

Complementary

470 WDI1 Drop-in Anchor
471 WDI1L Drop-in Anchor Lipped
473 WDI1 Setting Tool

Complementary

476 WBA Brass Anchor
428 BIS Hexagon Nut (BUP1000)
425 BIS Washer (BUP1000)

EN-SG 02/2022- Subject to modifications

BIS Hexagon Head Bolt

(K 45 20)

614



614 3 6XX



614 3 XXX

Features and Benefits

- Part No. 61436XX: slotted head
- material: steel
- zinc plated
- Part No. 614230: hot dip galvanized

Part No.	Type	G	L	s (mm)	Lm1 (mm)	SW1 (mm)	Pack 1
6143620	DIN 933	M6	24.0 mm	4.0	20	10	50
6143630	DIN 933	M6	34.0 mm	4.0	30	10	100
6143816	DIN 933	M8	21.3 mm	5.3	16	13	200
6143820	DIN 933	M8	25.3 mm	5.3	20	13	50
6143825	DIN 933	M8	30.3 mm	5.3	25	13	50
6143830	DIN 933	M8	35.0 mm	5.0	30	13	200
6143835	DIN 933	M8	40.3 mm	5.3	35	13	50
6143840	DIN 933	M8	45.0 mm	5.0	40	13	200
6143860	DIN 933	M8	65.3 mm	5.3	60	13	200
6143880	DIN 933	M8	85.3 mm	5.3	80	13	200
6143891	DIN 933	M8	105.3 mm	5.3	100	13	100
6143892	DIN 933	M8	125.3 mm	5.3	120	13	100
6143894	DIN 933	M8	145.3 mm	5.3	140	13	50
6143920	DIN 933	M10	26.4 mm	6.4	20	17	100
6143925	DIN 933	M10	31.4 mm	6.4	25	17	100
6143930	DIN 933	M10	36.4 mm	6.4	30	17	100
6143935	DIN 933	M10	41.1 mm	6.4	35	17	100
6143940	DIN 933	M10	46.4 mm	6.4	40	17	100
6143950	DIN 933	M10	56.4 mm	6.4	50	17	100
6143960	DIN 933	M10	66.0 mm	6.0	60	17	100
6143980	DIN 933	M10	86.0 mm	6.0	80	17	100
6143990	DIN 933	M10	96.4 mm	6.4	90	17	100
6144030	DIN 933	M12	37.4 mm	7.4	30	19	100
6144040	DIN 933	M12	47.4 mm	7.4	40	19	100
6144050	DIN 933	M12	57.4 mm	7.4	50	19	100
6144640	DIN 933	M16	50 mm	10.0	40	24	50
6141230	DIN 933	M12	37 mm	8.0	30	19	100

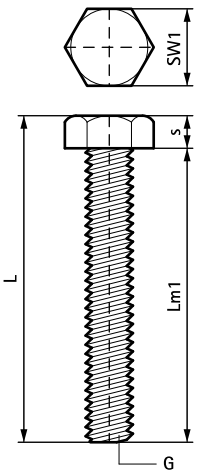

Complementary

426 BIS Washer
429 BIS Hexagon Nut
470 WDI1 Drop-in Anchor

Complementary

471 WDI1L Drop-in Anchor Lipped
473 WDI1 Setting Tool
476 WBA Brass Anchor

EN-SG 02/2022- Subject to modifications

BIS Washer (BUP1000)

(K 45 29)



Features and Benefits

- according to EN-ISO 7089 (was DIN 125A)
- material: steel 1.0332
- surface protection:
  - product is part of the BIS UltraProtect® 1000 system
  - suitable for in- and outdoor applications
  - stands min. 1,000 hours salt spray test (max. 5% red rust) according to ISO 9227
- tested for fire safety

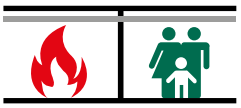

Part No.	Type	B (mm)	s (mm)	d1 (mm)	Pack 1
65381308	EN-ISO 7089	16	1.6	Ø 8.4	100
65381310	EN-ISO 7089	20	2.0	Ø 10.5	100
65381312	EN-ISO 7089	24	2.5	Ø 13.0	100
65381316	EN-ISO 7089	30	3.0	Ø 17.0	50
Ø 10.5 and above tested for fire safety.					

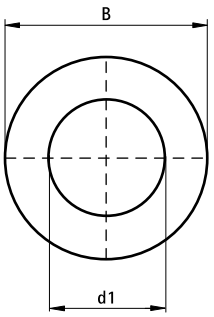

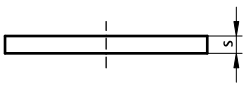

BIS Washer

(K 45 30)

653



Features and Benefits

- according to EN-ISO 7089 (was DIN 125A)
- material: steel
- zinc plated
- Part No. 6531012: hot dip galvanized
- tested for fire safety

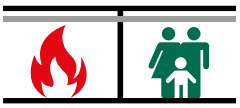

Part No.	Type	B (mm)	s (mm)	d1 (mm)	Pack 1	Pack 2
6533006	EN-ISO 7089	12	1.6	Ø 6.4	100	2,500
6533008	EN-ISO 7089	16	1.6	Ø 8.4	100	2,500
6533010	EN-ISO 7089	20	2.0	Ø 10.5	100	2,500
6533012	EN-ISO 7089	24	2.5	Ø 13.0	100	2,500
6531012	DIN 125A	24	2.5	Ø 13.0	100	-
6533016	EN-ISO 7089	30	3.0	Ø 17.0	50	2,500
6533020	EN-ISO 7089	37	3.0	Ø 21.0	100	-
6533606	DIN 9021	18	1.6	Ø 6.4	200	8,000
6533608	DIN 9021	25	2.0	Ø 8.4	200	4,000
6533610	DIN 9021	30	2.5	Ø 10.5	200	2,000
6533612	DIN 9021	40	3.0	Ø 13.0	100	-

Ø 10.5 and above tested for fire safety.

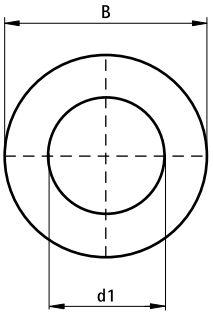

EN-SG 02/2022- Subject to modifications

BIS Serated Washer

(K 45 33)



Features and Benefits

- serrated lock washer with external teeth
- according to NEN-2453 (former DIN 6798)
- material: steel
- zinc plated

Part No.	B (mm)	s (mm)	d1 (mm)	Pack 1
6533996	11.0	0.7	Ø 6.4	500
6533998	15.0	0.8	Ø 8.4	200
6533990	18.0	0.9	Ø 10.5	500
6533992	20.5	1.0	Ø 12.5	500

EN-SG 02/2022- Subject to modifications

BIS Hexagon Nut (BUP1000)

(K 45 34)



Features and Benefits

- material: steel
- surface protection:
  - product is part of the BIS UltraProtect® 1000 system
  - suitable for in- and outdoor applications
  - stands min. 1,000 hours salt spray test (max. 5% red rust) according to ISO 9227
- tested for fire safety

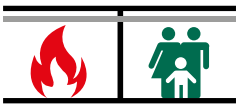

Part No.	Type	G	H (mm)	SW1 (mm)	Pack 1	Pack 2
61281008	DIN 934	M8	6.5	13	100	1,500
61281010	DIN 934	M10	8.0	17	100	2,000
61281012	DIN 934	M12	10.0	19	100	1,200
61281016	DIN 934	M16	13.0	24	100	-
M10 and above tested for fire safety.						

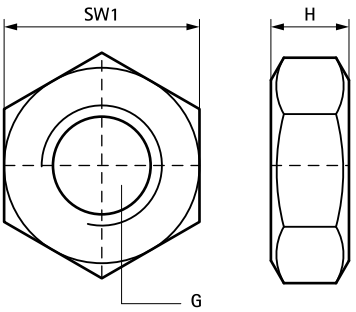

EN-SG 02/2022- Subject to modifications

BIS Hexagon Nut

(K 45 35)



Features and Benefits

- material: steel
- zinc plated
- tested for fire safety

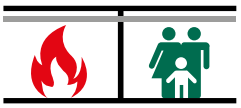

Part No.	Type	G	H (mm)	SW1 (mm)	Pack 1	Pack 2
6123006	DIN 934	M6	5.0	10	100	7,000
6123007	DIN 934	M7B	5.5	11	100	-
6123009	DIN 934	M7F	5.5	11	100	1,500
6123008	DIN 934	M8	6.5	13	100	1,500
6123010	DIN 934	M10	8.0	17	100	2,000
6123012	DIN 934	M12	10.0	19	100	1,200
6123014	DIN 934	M14	11.0	22	100	-
6123016	DIN 934	M16	13.0	24	100	-
6123020	DIN 934	M20	16.0	30	100	-
6123021	BSPP	G½"	15.0	27	100	-

M10 and above tested for fire safety.
M7B: pitch = M7 x 1 mm.
M7F: pitch = M7 x 1.5mm.

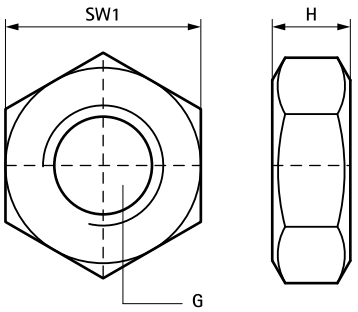

Complementary
404 BIS Roofing Sheet Hanger

Silent Nut Assembly for Stub-Out Bracket
and Universal Shower Valve Plate

(K 45 204)



Features and Benefits

- an adjustable connection option for mounting Universal Shower Valve Plate to stub-out bracket
- features quick, quarter-turn technology
- noise and vibration reducing
- hardware included

Part No.	Pack 1
59490964	25

EN-SG 02/2022- Subject to modifications

BIS Stud Bolts / BIS Threaded Rods

Maximum allowed load

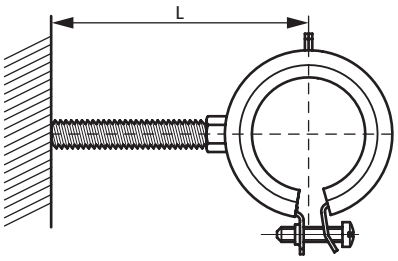

BIS Stud Bolts / BIS Threaded Rods

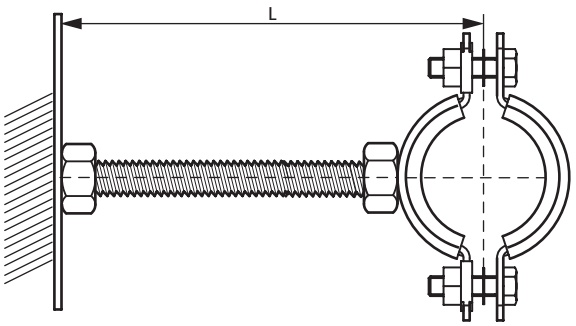

BIS Threaded Tubes

	BIS Stud Bolts / BIS Threaded Rods							BIS Threaded Tubes		
Ø	M8	M10	M12	M16	M20	M22	M24	1/2"	3/4"	1"
L (mm)										
20	210	422	744	1.936	3.785	5.295	6.542	3.057	5.377	10.693
30	140	281	496	1.291	2.523	3.530	4.361	2.038	3.584	7.128
40	105	211	372	968	1.892	2.647	3.271	1.528	2.688	5.346
50	84	169	297	774	1.514	2.118	2.617	1.223	2.151	4.277
60	70	141	248	645	1.262	1.765	2.181	1.019	1.792	3.564
70	60	120	212	553	1.081	1.513	1.869	873	1.536	3.055
80	50	105	186	484	946	1.324	1.636	764	1.344	2.673
90	40	94	165	430	841	1.177	1.454	679	1.195	2.376
100	32	81	149	387	757	1.059	1.308	611	1.075	2.138
125	21	52	111	310	606	847	1.047	489	860	1.711
150	14	36	77	258	505	706	872	408	717	1.426
175	10	27	57	203	433	605	748	349	614	1.222
200	-	20	43	155	378	529	654	305	538	1.069
225	-	16	34	123	300	469	582	272	478	950
250	-	13	28	99	243	380	504	239	430	855
275	-	11	23	82	201	314	416	198	391	778
300	-	-	19	69	169	264	350	166	358	713
325	-	-	16	59	144	225	298	141	322	658
350	-	-	14	51	124	194	257	122	278	611
375	-	-	12	44	108	169	224	106	242	570
400	-	-	11	39	95	148	197	93	213	531
450	-	-	-	31	75	117	156	74	168	420
500	-	-	-	25	61	95	126	60	136	340

Max. allowed load in N.
Allowable bending: f = (1/150) x L
Allowable bending stress: σ = 160 N/mm^2

Please contact our technical department in case of special applications.

BIS Sheet Metal Cylinder Screw

(K 45 40)



Features and Benefits

- according to ISO 7049 (was DIN 7981)
- zinc plated
- material: steel

Part No.	L	s (mm)	Pack 1	Pack 2
6174413	13 mm	4.2	100	-
6174516	16 mm	4.8	100	-
6174519	19 mm	4.8	100	-
6174431	30 mm	4.2	100	4,000
6174525	25 mm	5.0	100	4,000
6174530	30 mm	5.0	100	4,000
6174535	35 mm	5.0	100	4,000
6174536	35 mm	5.5	100	4,000

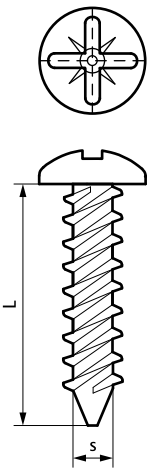

BIS Suspension Eye – Wood Thread

(K 45 45)



Features and Benefits

- material: steel
- zinc plated

Part No.	G	L	b x s (mm)	d1 (mm)	Lh (mm)	PØ (mm)	$F_{a,z}$ (N)	Pack 1
6813650	H6	85 mm	21 x 4.0	22 x 8.0	45	8	1,140	100
6813850	H8	100 mm	27 x 5.5	26 x 9.0	55	10	1,800	100

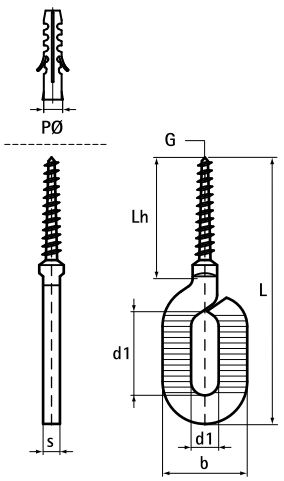

BIS Suspension Eye - Metric

(K 45 50)



Features and Benefits

- material: steel
- zinc plated

Part No.	G	L	b x s (mm)	d1 (mm)	Lm1 (mm)	$F_{a,z}$ (N)	Pack 1
6813830	M8	80 mm	27 x 5.5	26 x 9.0	30	1,800	100

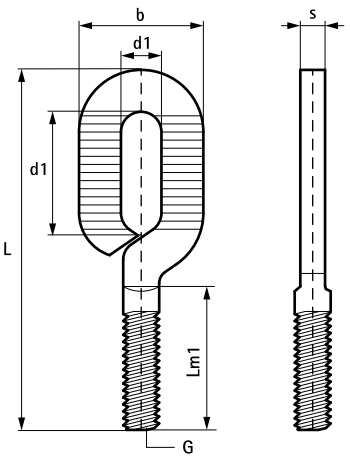

Complementary

470 WDI1 Drop-in Anchor
471 WDI1L Drop-in Anchor Lipped
581 WDI1 Drop-in Anchor SSt

Complementary

476 WBA Brass Anchor
473 WDI1 Setting Tool

EN-SG 02/2022- Subject to modifications

BIS Socket Head Bolt (BUP1000)

(K 45 54)

fixing of rail



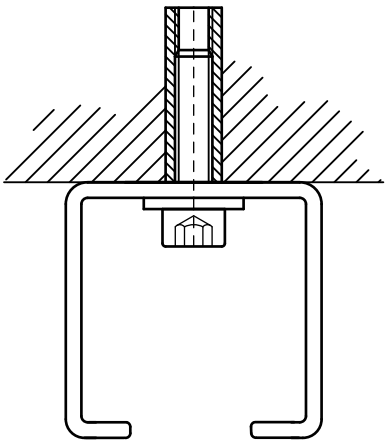

Features and Benefits

- for fixing of fixing rail
- material: steel, strength class 8.8
- surface protection:
  - product is part of the BIS UltraProtect® 1000 system
  - suitable for in- and outdoor applications
  - stands min. 1,000 hours salt spray test (max. 5% red rust) according to ISO 9227
- according to ISO 4762

Part No.	G	L	B (mm)	b (mm)	s (mm)	Pack 1
61380825	M8	25 mm	13	6	8.0	200
61380860	M8	60 mm	13	6	8.0	200
61380880	M8	80 mm	13	6	8.0	100
61381025	M10	25 mm	16	10	8.0	200
61381030	M10	30 mm	16	10	8.0	200
61381230	M12	30 mm	18	12	10.0	100
61381260	M12	60 mm	18	12	10.0	100
Required bolt or screw depends on rail hole pattern.						

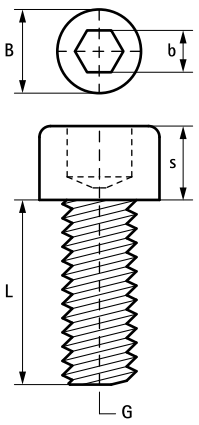

Complementary

470 WDI1 Drop-in Anchor
471 WDI1L Drop-in Anchor Lipped
581 WDI1 Drop-in Anchor SSt

Complementary

473 WDI1 Setting Tool
476 WBA Brass Anchor

BIS Socket Head Bolt and Screw

(K 45 55)

fixing of rail



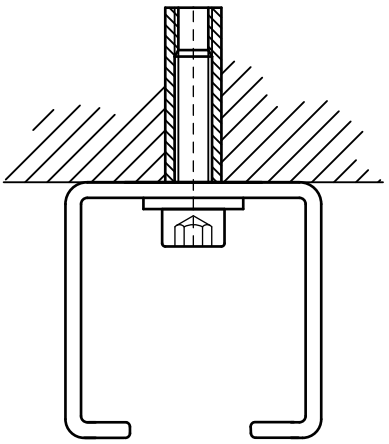

Features and Benefits

- for fixing of fixing rail
- material: steel, strength class 8.8
- zinc plated
- according to ISO 4762

Part No.	G	L	B (mm)	b (mm)	s (mm)	Pack 1
6133010	M8	16 mm	13	6.0	8.0	200
6133011	M8	20 mm	13	6.0	8.0	200
6133012	M8	25 mm	13	6.0	8.0	200
6133015	M10	15 mm	16	8.0	10.0	200
Required bolt or screw depends on rail hole pattern.						

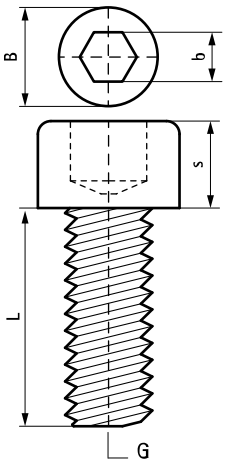

Complementary

470 WDI1 Drop-in Anchor
471 WDI1L Drop-in Anchor Lipped
473 WDI1 Setting Tool

Complementary

476 WBA Brass Anchor

EN-SG 02/2022- Subject to modifications

BIS Hexagon Wood Bolt

(K 45 60)

986



Features and Benefits

- material: steel
- zinc plated

Part No.	Model	Type	G	L	s (mm)	Lh (mm)	PØ (mm)	SW1 (mm)	Pack 1
6183805	Torx 30	986	H8	50 mm	6.5	30	10	13	100
6183806	Torx 30	986	H8	60 mm	6.5	35	10	13	100
6183807	Torx 30	986	H8	70 mm	6.5	40	10	13	100
6183808	Torx 30	986	H8	80 mm	6.5	50	10	13	100
6183809	DIN 571	986	H8	90 mm	6.5	55	10	13	100
6183810	DIN 571	986	H8	100 mm	6.5	60	10	13	100
6183812	DIN 571	986	H8	120 mm	6.5	75	10	13	100
6193006	DIN 571	986	H10	60 mm	7.0	35	12	17	100
6193008	DIN 571	986	H10	80 mm	7.0	50	12	17	50
6193010	DIN 571	986	H10	100 mm	7.0	60	12	17	50

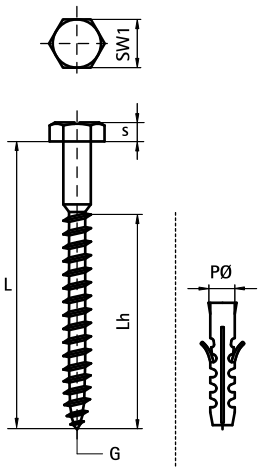

Complementary

510 BIS Star Plug

EN-SG 02/2022- Subject to modifications

BIS Chipboard Screw

(K 45 65)



Features and Benefits

- countersunk head with cross slot
- material: steel
- zinc plated, yellow passivated

Part No.	L	s (mm)	PØ (mm)	Pack 1
6185405054	50 mm	4.0	7.0	500
6185505054	50 mm	5.0	8.0	500
6185506044	60 mm	5.0	8.0	400
6185606044	60 mm	6.0	8.0	250

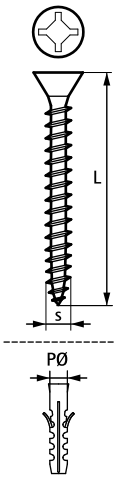

EN-SG 02/2022- Subject to modifications

BIS Chain (DIN 5685)

(K 50 05)





Features and Benefits

- Part No. 0910013: short linked (according to DIN 5685-2)
- Part No. 0910015 and 0910017: long linked (according to DIN 5685-1)
- material: steel
- zinc plated

Part No.	L	s (mm)	d1 (mm)	$F_{a,z}$ (N)	Pack 1	App.
0910013	30 m	3.0	16 x 5.4	850	1	m.
0910015	30 m	3.0	26 x 5.4	600	1	m.
0910017	30 m	4.0	32 x 7.2	1,800	1	m.

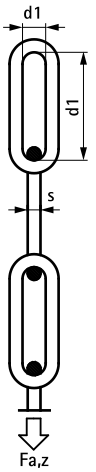

Complementary

441 BIS S-Hook
443 BIS Splitted S-Hook
444 BIS Pig Tail Chain Hook

BIS Victor Chain (DIN 5686)

(K 50 10)





Features and Benefits

- according to DIN 5686
- material: steel
- zinc plated

Part No.	L	s (mm)	d1 (mm)	$F_{a,z}$ (N)	Pack 1	App.
0912022	30 m	2.0	28 x 5.0	400	1	m.
0912025	30 m	2.2	31 x 5.0	500	1	m.
0912027	30 m	2.5	35 x 6.0	600	1	m.
0912030	30 m	2.8	39 x 6.0	800	1	m.
0913032	30 m	3.1	41 x 8.0	1,000	1	m.

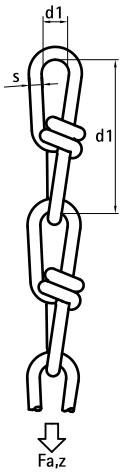

Complementary

441 BIS S-Hook
443 BIS Splitted S-Hook
444 BIS Pig Tail Chain Hook

EN-SG 02/2022- Subject to modifications

BIS S-Hook

(K 50 15)

7.0 - 14.0 mm



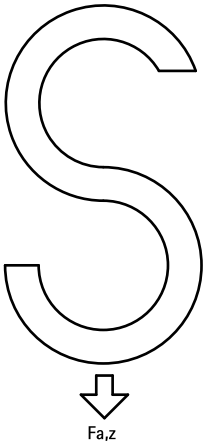

Features and Benefits

- material: steel
- zinc plated

Part No.	D (mm)	s (mm)	d1 (mm)	$F_{a,z}$ (N)	Pack 1	Pack 2
6941030	7.0	3.0	3.5 mm	120	100	500
6941040	11.0	4.0	5.0 mm	250	100	500
6941050	14.0	5.0	5.5 mm	400	100	500

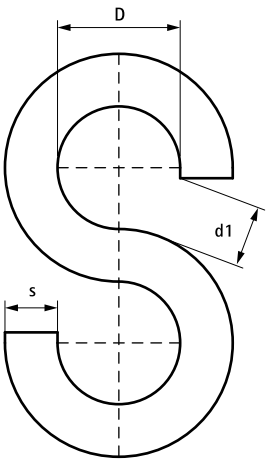

BIS DobyGrip Info Page



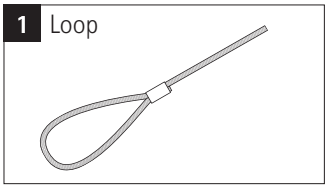

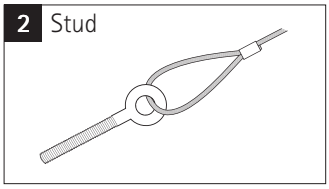

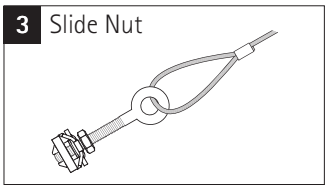

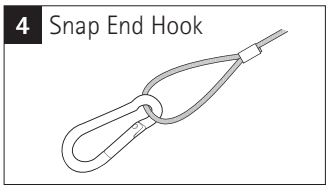

Strong, simple and fast

The BIS DobyGrip catenary wire system is the quick and efficient alternative to threaded rods and chains. You can install it up to 6x faster.

The system is ideal for static objects which need to be hung in high areas. For example cable channels, suspended ceilings, air ducts and light fittings.

Suitable for use in multiple applications and markets including HVAC, electrical, displays, lighting, signage and vineyards.

Easy to use

1. Pass cable tail through BIS DobyGrip in the direction of the arrow on casing.
2. Pass cable tail through suspension point of supported item, pull cable back through BIS DobyGrip. Height can be easily adjusted by using external cable release, infinitely adjustable.

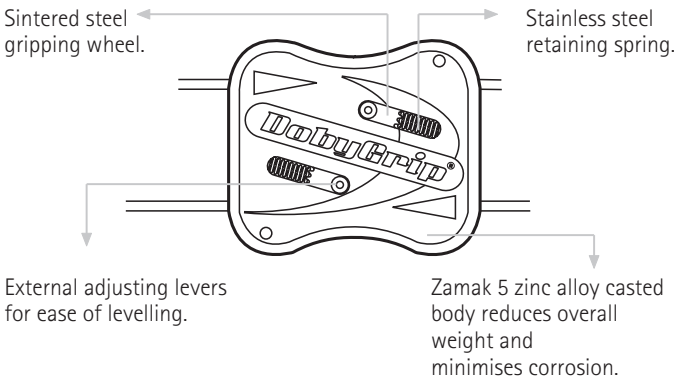

Lightweight

Assembly and handling on site are much simpler. Reduces the need for working at height with unwieldly fixing materials.

4 versions for 1001 purposes

The various versions make the system very flexible and widely applicable. Every type of BIS DobyGrip cable is available in various lengths. Reels of wire can also be supplied.

High safe working loads

The BIS DobyGrip cable is available in 2 different thicknesses and is suitable for both vertical and diagonal loads. Suspension with the BIS DobyGrip system is not only strong, but also reduces vibration.

s	Max. Fa,z (N)				
	0°	15°	30°	45°	60°
s = 1 mm	100	90	80	70	50
s = 2 mm	500	450	400	350	250

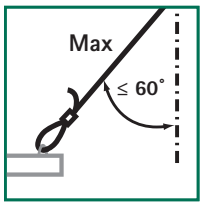

Fa.z 50%

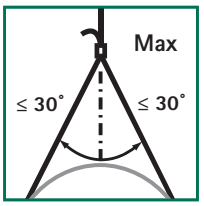

Fa.z 80%

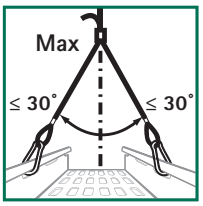

Fa.z 80%





EN-SG 02/2022- Subject to modifications

BIS Splitted S-Hook

(K 50 20)



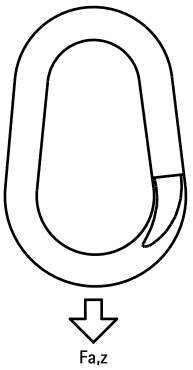

Features and Benefits

- material: steel
- zinc plated

Part No.	s (mm)	d1 (mm)	$F_{a,z}$ (N)	Pack 1	Pack 2
6942030	3.0	16.5 x 6.5	350	100	500
6942040	4.0	20.0 x 8.0	550	100	300

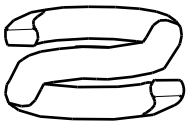

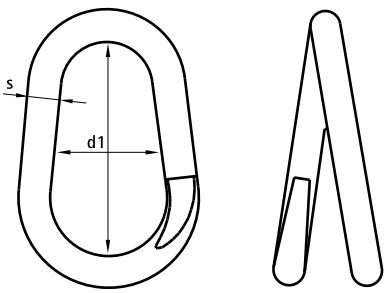

BIS Pig Tail Chain Hook

(K 50 25)



Features and Benefits

- material: steel
- zinc plated

Part No.	G	d1 (mm)	Lm1 (mm)	$F_{a,z}$ (N)	Pack 1
6940006	M6	15.0	40	400	100
6940008	M8	16.5	30	600	100

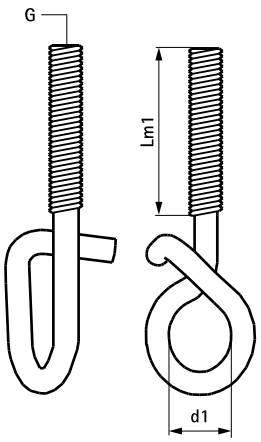

EN-SG 02/2022- Subject to modifications

BIS Stud Bolt (BUP1000)

(K 55 04)

fixing to rail, wall plates, etc.



Features and Benefits

- according to DIN 976-1
- material: steel
- surface protection:
  - product is part of the BIS UltraProtect® 1000 system
  - suitable for in- and outdoor applications
  - stands min. 1,000 hours salt spray test (max. 5% red rust) according to ISO 9227
- tested for fire safety

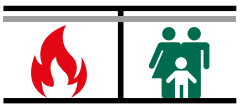

Part No.	Type	G	L	$A_{s,nom}$ (mm2)	$F_{a,z}$ (N)	Pack 1
63181010	DIN 976-1	M8	100 mm	36.6	19,500	100
63181020	DIN 976-1	M8	200 mm	36.6	19,500	50
63281010	DIN 976-1	M10	100 mm	58.0	30,900	100
63281020	DIN 976-1	M10	200 mm	58.0	30,900	50
M10 and above tested for fire safety.						

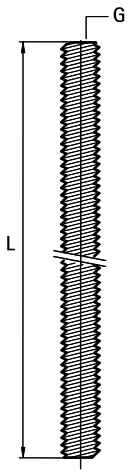

Complementary

453 BIS Stud Connector (BUP1000)
454 BIS Stud Connector
457 BIS Threaded Rod Connector

BIS Stud Bolt

(K 55 05)

fixing to rail, wall plates, etc.

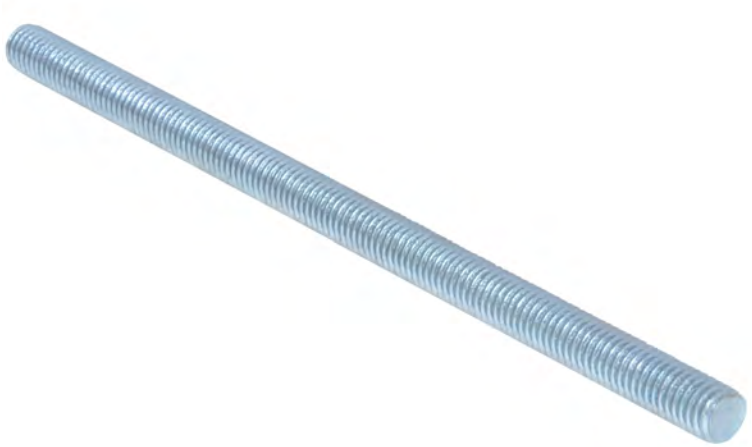

Features and Benefits

- according to DIN 976-1
- material: steel
- zinc plated
- tested for fire safety

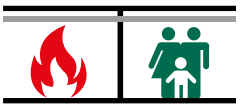

Part No.	Type	G	L	$A_{s,nom}$ (mm2)	$F_{a,z}$ (N)	Pack 1	Pack 2
6313602	-	M6	20 mm	-	-	200	4,000
6313802	DIN 976-1	M8	25 mm	36.6	9,700	100	1,000
6313803	DIN 976-1	M8	30 mm	36.6	9,700	100	1,000
6313804	DIN 976-1	M8	40 mm	36.6	9,700	100	1,000
6313805	DIN 976-1	M8	50 mm	36.6	9,700	100	1,000
6313806	DIN 976-1	M8	60 mm	36.6	9,700	100	1,000
6313807	DIN 976-1	M8	70 mm	36.6	9,700	100	1,000
6313808	DIN 976-1	M8	80 mm	36.6	9,700	100	1,000
6313809	DIN 976-1	M8	90 mm	36.6	9,700	100	1,000
6313810	DIN 976-1	M8	100 mm	36.6	9,700	100	1,000
6313812	DIN 976-1	M8	120 mm	36.6	9,700	50	250
6313815	DIN 976-1	M8	150 mm	36.6	9,700	50	250
6313818	DIN 976-1	M8	180 mm	36.6	9,700	50	250
6313820	DIN 976-1	M8	200 mm	36.6	9,700	50	250
6323002	DIN 976-1	M10	25 mm	58.0	15,400	50	500
6323003	DIN 976-1	M10	30 mm	-	-	50	500
6323004	DIN 976-1	M10	40 mm	58.0	15,400	50	500
6323005	DIN 976-1	M10	50 mm	58.0	15,400	50	500
6323006	DIN 976-1	M10	60 mm	58.0	15,400	50	500
6323007	DIN 976-1	M10	70 mm	58.0	15,400	50	500
6323008	DIN 976-1	M10	80 mm	58.0	15,400	50	500
6323009	DIN 976-1	M10	90 mm	58.0	15,400	50	500
6323010	DIN 976-1	M10	100 mm	58.0	15,400	50	250
6323012	DIN 976-1	M10	120 mm	58.0	15,400	50	250
6323015	DIN 976-1	M10	150 mm	-	-	50	250
6323016	DIN 976-1	M10	160 mm	58.0	15,400	50	250
6323018	DIN 976-1	M10	180 mm	58.0	15,400	50	250
6323020	DIN 976-1	M10	200 mm	58.0	15,400	50	250
6323024	DIN 976-1	M10	240 mm	-	-	50	100

M10 and above tested for fire safety.

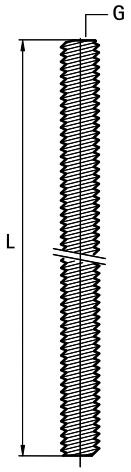

Complementary

454 BIS Stud Connector
457 BIS Threaded Rod Connector

EN-SG 02/2022- Subject to modifications

BIS Threaded Rod (BUP1000)

(K 55 08)

fixing to rail, wall plates, etc.



Features and Benefits

- according to DIN 976-1
- material: steel, strength class 4.8
- surface protection:
  - product is part of the BIS UltraProtect® 1000 system
  - suitable for in- and outdoor applications
  - stands min. 1,000 hours salt spray test (max. 5% red rust) according to ISO 9227

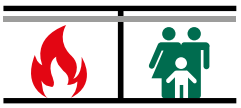

Part No.	Type	Thread (M)	L	$A_{s,nom}$ (mm2)	$F_{a,z}$ (N)	BndS
63081008	DIN 976-1	M8	1 m	36.6	9,700	50
63082008	DIN 976-1	M8	2 m	36.6	9,700	25
63081010	DIN 976-1	M10	1 m	58.0	15,400	25
63082010	DIN 976-1	M10	2 m	58.0	15,400	20
63081012	DIN 976-1	M12	1 m	84.3	22,400	20
63082012	DIN 976-1	M12	2 m	84.3	22,400	15
63081016	DIN 976-1	M16	1 m	157.0	41,800	20
63082016	DIN 976-1	M16	2 m	157.0	41,800	10
M10 tested for fire safety. *M12 tested for fire safety.*						

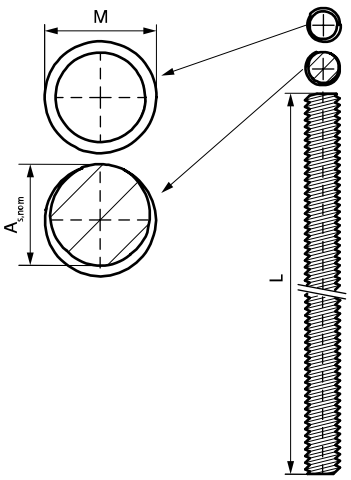

Complementary

453 BIS Stud Connector (BUP1000)
454 BIS Stud Connector
457 BIS Threaded Rod Connector

EN-SG 02/2022- Subject to modifications

BIS Threaded Rod

(K 55 10)

fixing to rail, wall plates, etc.

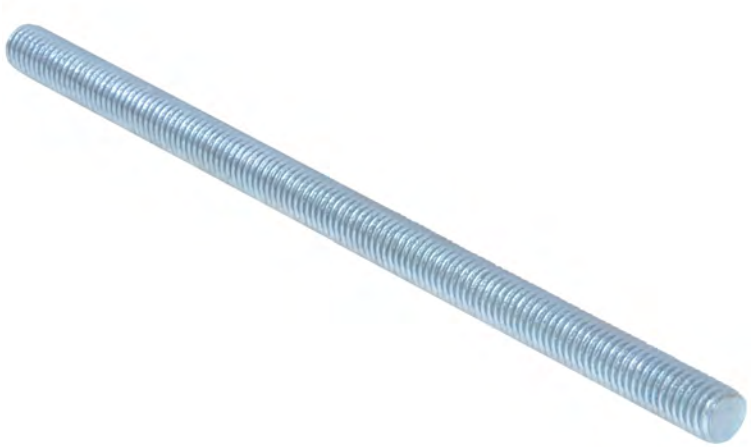

Features and Benefits

- according to DIN 976-1
- material: steel, strength class 4.8
- zinc plated

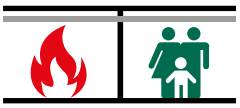

Part No.	Type	Thread (M)	L	$A_{s,nom}$ (mm2)	$F_{a,z}$ (N)	BndS
6303006	DIN 976-1	M6	1 m	20.1	5,300	100
6303206	DIN 976-1	M6	2 m	20.1	5,300	50
6303306	DIN 976-1	M6	3 m	20.1	5,300	50
6303007	DIN 976-1	M7B	1 m	-	-	50
6303007F	DIN 976-1	M7F	1 m	-	-	50
6303008	DIN 976-1	M8	1 m	36.6	9,700	50
6303208	DIN 976-1	M8	2 m	36.6	9,700	25
6303308	DIN 976-1	M8	3 m	36.6	9,700	25
6303010	DIN 976-1	M10	1 m	58.0	15,400	25
6303210	DIN 976-1	M10	2 m	58.0	15,400	20
6303310	DIN 976-1	M10	3 m	58.0	15,400	20
6303012	DIN 976-1	M12	1 m	84.3	22,400	20
6303212	DIN 976-1	M12	2 m	84.3	22,400	15
6303312	DIN 976-1	M12	3 m	84.3	22,400	15
6303014	DIN 976-1	M14	1 m	114.0	30,400	10
6303016	DIN 976-1	M16	1 m	157.0	41,800	10
6303216	DIN 976-1	M16	2 m	157.0	41,800	10
6303316	DIN 976-1	M16	3 m	157.0	41,800	1
6303020	DIN 976-1	M20	1 m	245.0	65,300	5
6303024	DIN 976-1	M24	1 m	353.0	94,100	5

M7B: pitch = M7 x 1 mm.
M7F: pitch = M7 x 1.5mm.
M10 tested for fire safety.
M12 tested for fire safety.

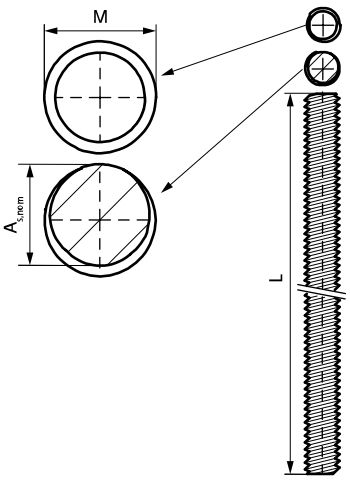

Complementary

454 BIS Stud Connector
111 BIS dB-FiX® 80 Stand-off Fixing Kit

EN-SG 02/2022- Subject to modifications

BIS Threaded Tube (BUP1000)

(K 55 13)

fixing to rail, wall plates, etc.



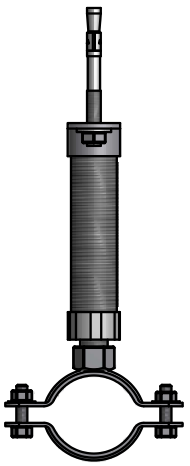

Features and Benefits

- according to EN 10255 (was DIN 2440)
- Installation according to instructions for use
- material: steel
- surface protection:
  - product is part of the BIS UltraProtect® 1000 system
  - suitable for in- and outdoor applications
  - stands min. 1,000 hours salt spray test (max. 5% red rust) according to ISO 9227

Part No.	G	L	BndS
6298221	G½"	2 m	10
6298233	G1"	2 m	5

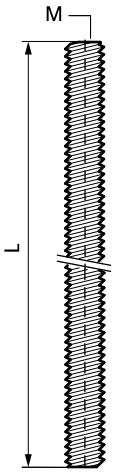

Complementary

27 BIS Heavy Duty Clamp HD1501 (BUP1000)
47 BIS Heavy Duty Clamp HD500 (BUP1000)

BIS Threaded Tube

(K 55 15)

fixing to rail, wall plates, etc.



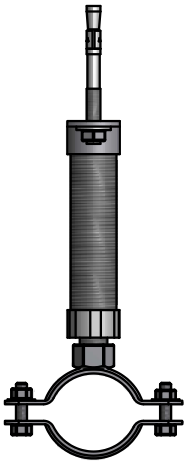

Features and Benefits

- according to EN 10255 (was DIN 2440)
- metrical thread according to DIN ISO 228-1
- material: steel
- zinc plated

Part No.	Thread (M)	L	BndS
6293021	G½"	0.5 m	-
6293133	G1"	1 m	-
6293221	G½"	2 m	10
6293227	G¾"	2 m	-
6293233	G1"	2 m	5

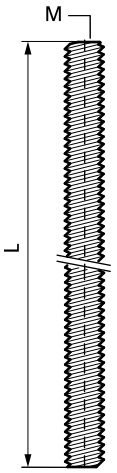

Complementary

27 BIS Heavy Duty Clamp HD1501 (BUP1000)
47 BIS Heavy Duty Clamp HD500 (BUP1000)
387 BIS Wall Plate Resistance Welded

EN-SG 02/2022- Subject to modifications

BIS Threaded Distance Bar

(K 55 20)

fixing to rail, wall plates, etc.



Features and Benefits

- for fixing of clamps to wall plates or plugs with female thread
- material: steel
- zinc plated
- tested for fire safety

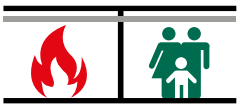

Part No.	G	L	Pack 1	Pack 2
6413158	M8	15 mm	100	1,000
6413258	M8	25 mm	100	1,000
6413358	M8	35 mm	100	1,000
6413458	M8	45 mm	100	1,000
6413558	M8	55 mm	100	1,000
6413658	M8	65 mm	100	1,000

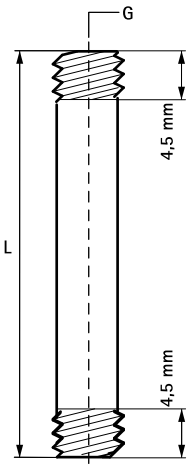

BIS Threaded Nipple

(K 55 25)

adjustment of thread connection



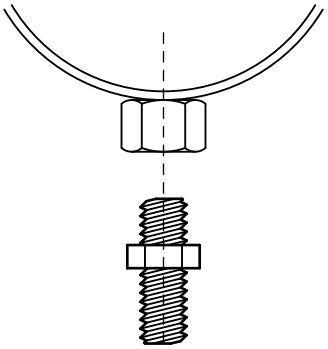

Features and Benefits

- for creating male thread to for example clamp or wall plate
- material: steel
- zinc plated
- tested for fire safety

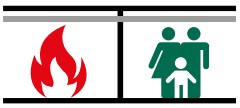

Part No.	Model	G	Lm1 (mm)	Lm2 (mm)	SW1 (mm)	Pack 1	Pack 2
6413006	Round Collar	M6	8.0	8.0	-	100	3,000
6413008	Hexagon Collar	M8	8.0	12.0	10	100	2,000
M8 and above tested for fire safety.							

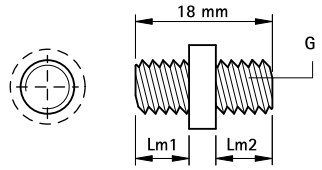

641 3 006

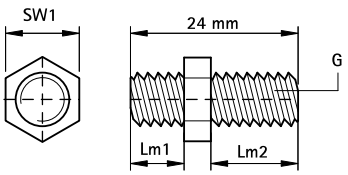

641 3 008

EN-SG 02/2022- Subject to modifications

BIS Stud Connector (BUP1000)

(K 55 28)

connecting of stud bolts



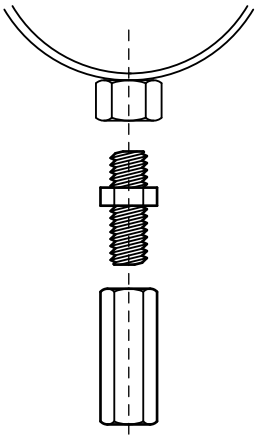

Features and Benefits

- to connect 2 male threaded components
- material: steel
- surface protection:
  - product is part of the BIS UltraProtect® 1000 system
  - suitable for in- and outdoor applications
  - stands min. 1,000 hours salt spray test (max. 5% red rust) according to ISO 9227

Part No.	G	L	SW1 (mm)	$F_{a,z}$ (N)	Pack 1	Pack 2
6458830	M8	30 mm	11	18,100	100	1,000
6458940	M10	40 mm	13	20,400	50	500
6458240	M12	40 mm	17	23,000	25	250

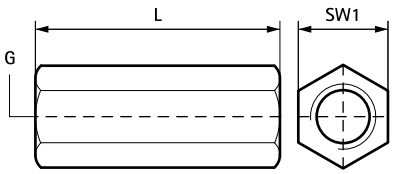

BIS Stud Connector

(K 55 30)

connecting of stud bolts



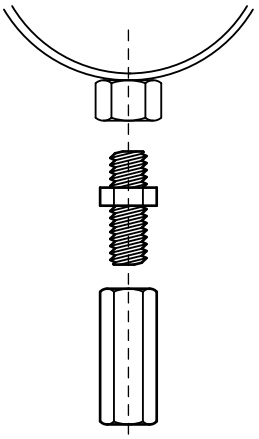

Features and Benefits

- to connect 2 male threaded components
- zinc plated
- material: steel

Part No.	G	L	SW1 (mm)	$F_{a,z}$ (N)	Pack 1	Pack 2
6453625	M6	25 mm	10	11,900	100	1,000
6453725	M7B	25 mm	11	15,900	100	1,000
6453830	M8	30 mm	11	18,100	100	1.000
6453930	M10	30 mm	13	20,900	50	500
6453940	M10	40 mm	13	20,400	50	1,000
6453240	M12	40 mm	17	23,000	50	500
6453016	M16	48 mm	24	30,300	200	-
6463650	M16	50 mm	24	30,300	25	-
M7B: pitch = M7 x 1 mm.						

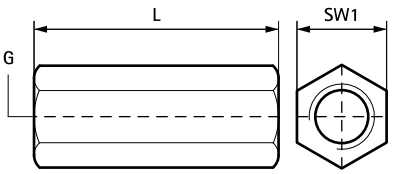

Alternative

453 BIS Stud Connector (BUP1000)

EN-SG 02/2022- Subject to modifications

BIS Thread Adaptor (M/F)

(K 55 35)

adjustment of thread connection



6473XXX



6473521
6484321

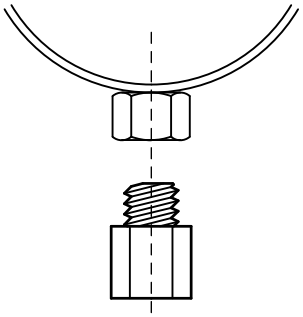

Features and Benefits

- to enlarge or reduce the thread size in the connection of clamps, etc.
- material: steel
- zinc plated
- tested for fire safety

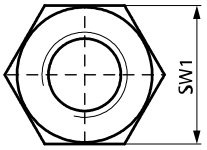

Part No.	H (mm)	h (mm)	G1	G2	Lm1 (mm)	Lm2 (mm)	SW1 (mm)	Pack 1	Pack 2
6473008	19	12	M8	M6	7.0	5.5	13	100	1,000
6473207	22	12	M8	M7F	7.0	8.0	13	50	500
6473108	21	14	M7F	M8	7.0	5.5	13	50	500
6473206	20	12	M6	M8	7.0	6.0	13	100	2,000
6473210	23	15	M10	M8	9.0	6.0	13	100	2,000
6473212	23	15	M12	M8	8.0	6.0	17	50	-
6473221	30	22	G1/2	M8	13.0	8.0	27	50	250
6473306	21	13	M6	M10	7.0	6.0	13	100	-
6473308	21	13	M8	M10	7.0	6.0	13	100	2,000
6473312	25	15	M12	M10	8.0	8.0	17	50	500
6473316	32	22	M16	M10	13.0	8.0	24	25	-
6473321	31	21	G1/2	M10	12.0	8.0	27	25	250
6473408	23	13	M8	M12	7.0	7.5	13	50	1,000
6473410	23	13	M10	M12	8.0	7.5	13	50	1,000
6473416	32	22	M16	M12	11.0	8.0	24	50	-
6473510	32	18	M10	M16	9.0	11.0	19	50	-
6473512	32	18	M12	M16	10.0	11.0	19	50	-
6473421	26	11	M10	G1/2	9.0	13.0	27	25	250
6484321	8	-	M10	G1/2	8.0	-	-	50	500
6473521	15	-	M16	G1/2	15.0	-	-	50	250
6473621	25	15	G3/4	G1/2	12.0	7.0	-	50	700
6473721	32	20	G1	G1/2	17.0	9.0	-	10	100

M10 and above tested for fire safety.
M7F: pitch = M7 x 1.5mm.

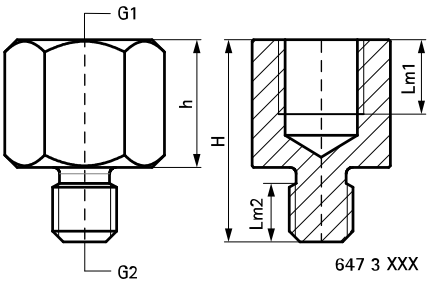

647 3 XXX

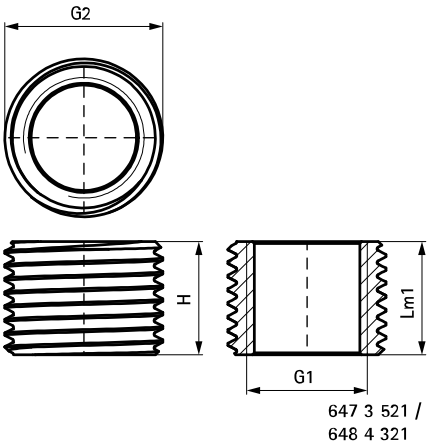

647 3 521 /
648 4 321

BIS Stud Connector (Round)

(K 55 39)

adjustment of thread connection



Features and Benefits

- sistema para unir 2 elemntos roscados
- útil para separar abrazaderas de la pared
- material: steel
- zinc plated

Part No.	G	L	Pack 1	Pack 2
6459620	M6	20 mm	100	2,700
6459630	M6	30 mm	100	2,000
6459820	M8	20 mm	100	2,700
6459830	M8	30 mm	100	1,000
6459030	M10	30 mm	100	1,000

EN-SG 02/2022- Subject to modifications

BIS Threaded Rod Connector

(K 55 41)

adjustment of thread connection





Features and Benefits

- to connect 2 male threaded components
- vertically adjustable
- material: steel
- pre-galvanized

Part No.	G	B (mm)	$F_{a,z}$ (N)	Pack 1	Pack 2
6455006	M6	24	2,680	25	250
6455008	M8	24	2,250	25	250
6455010	M10	30	3,590	25	250

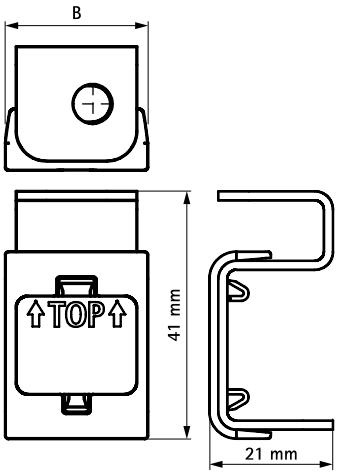

BIS DobyGrip Loop

(K 65 05)



Features and Benefits

- for a quick and easy fixing to roof and bearing beams, ridge beams, etc.
- reduces installation time compared to conventional methods
- wire suspension system for high loads
- all wires are supplied including BIS DobyGrip Lock
- material: 7x7 stranded galvanized steel wire rope
- strict quality inspection procedures and independent tests ensure reliability
- see also: BIS DobyGrip Info Page

Part No.	L	s (mm)	$F_{a,z}$ (N)	Pack 1	Pack 2
09481101	1 m	1.0	100	10	500
09481102	2 m	1.0	100	10	250
09481103	3 m	1.0	100	10	250
09481105	5 m	1.0	100	10	100
09481201	1 m	2.0	500	10	250
09481202	2 m	2.0	500	10	100
09481203	3 m	2.0	500	10	100
09481205	5 m	2.0	500	10	100

Loads tested to a 5:1 safety factor.All ratings were determined by independent testing by Northumbria University and witnessed by Lloyds Register.

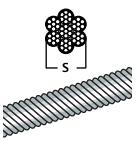

Complementary

324 Britclips® Tiger
325 Britclips® FC
497 BIS HK

EN-SG 02/2022- Subject to modifications

BIS DobyGrip Stud

(K 65 10)



Features and Benefits

- for a quick and easy fixing to ceilings by means of a wall plug/drop-in-anchor
- reduces installation time compared to conventional methods
- wire suspension system for high loads
- all wires are supplied including BIS DobyGrip Lock
- material: 7x7 stranded galvanized steel wire rope
- strict quality inspection procedures and independent tests ensure reliability
- see also: BIS DobyGrip Info Page

Part No.	G	L	B (mm)	h (mm)	s (mm)	d1 (mm)	Lm1 (mm)	$F_{a,z}$ (N)	Pack 1	Pack 2
09482261	M6	1 m	20	62	2.0	Ø 11	48	500	10	250
09482262	M6	2 m	20	62	2.0	Ø 11	48	500	10	100
09482265	M6	5 m	20	62	2.0	Ø 11	48	500	10	100
09482281	M8	1 m	25	74	2.0	Ø 13	56	500	10	250
09482282	M8	2 m	25	74	2.0	Ø 13	56	500	10	100
09482283	M8	3 m	25	74	2.0	Ø 13	56	500	10	100
09482285	M8	5 m	25	74	2.0	Ø 13	56	500	10	100

Loads tested to a 5:1 safety factor.All ratings were determined by independent testing by Northumbria University and witnessed by Lloyds Register.

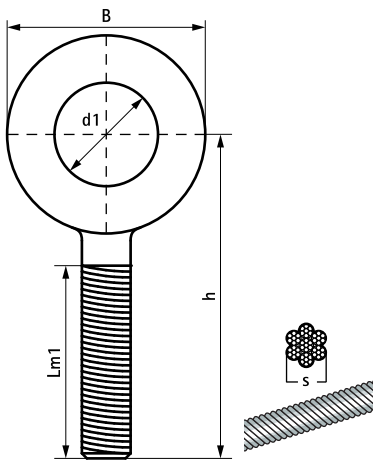

Complementary

507 BIS TWIST

BIS DobyGrip Snap End Hook

(K 65 20)



Features and Benefits

- for a quick and easy fixing to hooks and suspension eyes
- reduces installation time compared to conventional methods
- wire suspension system for high loads
- all wires are supplied including BIS DobyGrip Lock
- material: 7x7 stranded galvanized steel wire rope
- strict quality inspection procedures and independent tests ensure reliability
- see also: BIS DobyGrip Info Page

Part No.	L	B (mm)	H (mm)	s (mm)	s1 (mm)	d1 (mm)	$F_{a,z}$ (N)	Pack 1	Pack 2
09486201	1 m	30	60	2.0	6.0	9.0	500	10	250
09486202	2 m	30	60	2.0	6.0	9.0	500	10	100
09486203	3 m	30	60	2.0	6.0	9.0	500	10	100

Loads tested to a 5:1 safety factor.All ratings were determined by independent testing by Northumbria University and witnessed by Lloyds Register.

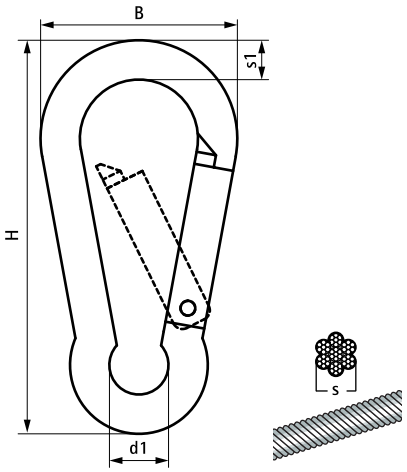

Complementary

324	Britclips® Tiger
325	Britclips® FC
497	BIS HK

EN-SG 02/2022- Subject to modifications

BIS DobyGrip Wire Reel

(K 65 25)



Features and Benefits

- for a quick and easy fixing to various suspension points
- wire lengths can be self-determined
- wire suspension system for high loads
- material: 7x7 stranded galvanized steel wire rope
- strict quality inspection procedures and independent tests ensure reliability
- see also: BIS DobyGrip Info Page

Part No.	L	s (mm)	$F_{a,z}$ (N)	Pack 1	Pack 2
09489115	150 m	1.0	100	1	8
09489215	150 m	2.0	500	1	2

Loads tested to a 5:1 safety factor.All ratings were determined by independent testing by Northumbria University and witnessed by Lloyds Register.

Complementary

324 Britclips® Tiger
325 Britclips® FC
497 BIS HK

BIS DobyGrip Lock

(K 65 30)



Features and Benefits

- reduces installation time compared to conventional methods
- wire suspension system for high loads
- Part No. 09489001: for use in combination with 1 mm diameter BIS DobyGrip wires
- Part No. 09489000: for universal use in combination with 1 mm as well as 2 mm diameter BIS DobyGrip wires
- Part No. 09489001: suitable for a maximum load of 10kg (1 mm wire diameter) with a 5:1 safety factor
- Part No. 09489000: suitable for a maximum load of 10kg (1 mm wire diameter) or 50kg (2 mm wire diameter) with a 5:1 safety factor
- simple height adjustment using external cable release, infinitely adjustable
- material: body of Zamak 5 zinc alloy; retaining spring of stainless steel (AISI 304); gripping wheel of sintered steel
- strict quality inspection procedures and independent tests ensure reliability
- see also: BIS DobyGrip Info Page

Part No.	L	B (mm)	$F_{a,z}$ (N)	Pack 1	Pack 2	For (DobyGrip)
09489001	20 mm	16.5	100	50	1,000	1 mm
09489000	30 mm	25.0	500	20	500	2 mm

Loads tested to a 5:1 safety factor.All ratings were determined by independent testing by Northumbria University and witnessed by Lloyds Register.

EN-SG 02/2022- Subject to modifications

BIS DobyGrip Lighting Kit

(K 65 32)



Features and Benefits

- lightweight and ideal easy to use solution for lighting to be hung in high areas
- for a quick and easy fixing to roof and bearing beams, ridge beams, etc.
- reduces installation time compared to conventional methods
- material: 7x7 stranded galvanized steel wire rope
- strict quality inspection procedures and independent tests ensure reliability
- lighting kit consists of:
  - 2 x 3 meter lengths of BIS DobyGrip 1 mm wire
  - 2 x BIS DobyGrip lock 1 mm
  - 2 x Suspension Clips
- see also: BIS DobyGrip Info Page

Part No.	Model	$F_{a,z}$ (N)	Pack 1	App.
09489300	Lighting Kit	80	2	pc.

Loads tested to a 5:1 safety factor.All ratings were determined by independent testing by Northumbria University and witnessed by Lloyds Register.

BIS Catenary Wire Cutter

(K 65 60)



Features and Benefits

- for cutting BIS DobyGrip wire ropes without unraveling
- spring loaded action and non slide grip

Part No.	Model	Pack 1	Pack 2
09409005	For wire diameters 1 - 3 mm	1	10

EN-SG 02/2022- Subject to modifications

BIS Wire Rope

(K 65 35)



Features and Benefits

- material: mild steel
- pre-galvanized
- packed per reel

Part No.	Code	L	s (mm)	$F_{a,z}$ (N)	Pack 1
6390303	CAT3-30	30 m	3.0	1,900	1
6390305	CAT3-50	50 m	3.0	1,900	1
6390310	CAT3-100	100 m	3.0	1,900	1

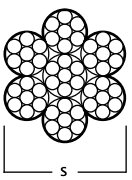

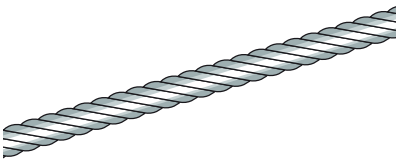

BIS Rope Grip and Eyelet

(K 65 40)



639 1 X12



639 2 XXX

Features and Benefits

- material: mild steel
- pre-galvanized

Part No.	Code	s (mm)	d1 (mm)	Pack 1
6392308	CAT3-RG	3.0	8.0 x 5.5	20

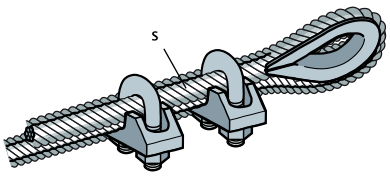

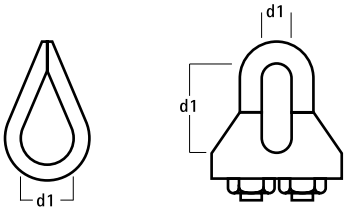

639 1 X12

639 2 XXX

EN-SG 02/2022- Subject to modifications

BIS Hook and Eye Rope Tensioner

(K 65 45)



Features and Benefits

- material: mild steel
- pre-galvanized

Part No.	Code	d1 (mm)	k (mm)	Pack 1
6393210	CAT6-ST	10	175 - 255	20

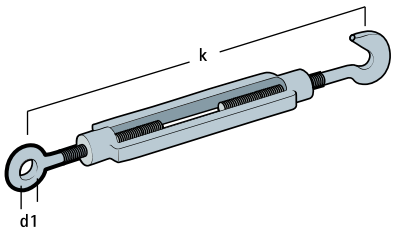

EN-SG 02/2022- Subject to modifications

BIS Anchor Ring

(K 65 50)



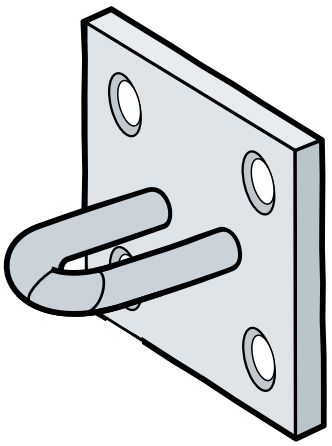

Features and Benefits

- material: mild steel
- pre-galvanized

Part No.	Code	B (mm)	H (mm)	s (mm)	Pack 1
6393000	CAT50-RP	50	50	5.0	10

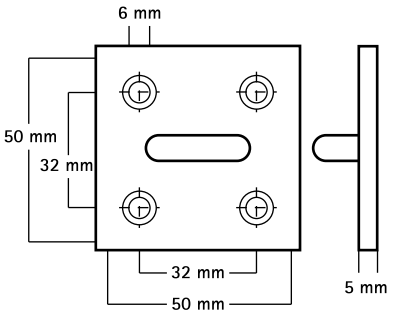

EN-SG 02/2022- Subject to modifications

L BIS Fastenings



Heavy Duty Anchors

WDI1 Drop-in Anchor 470
WDI1L Drop-in Anchor Lipped 471
WDI1R Drop-in Anchor Short 472
WDI1 Setting Tool 473
WDI1R Setting Tool Set 474
WDI1R SD Stop Drill Bit 475
WBA Brass Anchor 476
WSA1 Shield Anchor 477
WTB1 Throughbolt Anchor 478
WTB7 Throughbolt Anchor 479
WHA1H Highload Anchor 480
WCA1 Ceiling Anchor 481
WHC Hollow Core Anchor 482
WGB-M Aerated Concrete Anchor 483
WGB-M Setting Tool 484
WIS Chemical Anchor WPSF100 485
WIS Chemical Anchor WVSF200 486
WIS Extension Pipe 487
WIS Brush 488
WIS Blow Pump 489
WIS Dispenser Gun 490
WIS Plastic Mesh Sleeve 491
WIS Threaded Rod 492
WIS Stud Bolt 493
WDI1 SD Stop Drill Bit 494
WSDS+ 3CE Concrete Drill Bit 495



BIS Anchors

WCA1 Ceiling Anchor 496
BIS HK 497



Light Duty Fixings

WUP Uni Plug 498
WEP Expansion Plug 499
WNP Nail Plug 500
WPF Plasterboard Fixings 501
WCP Cavity Plug 502
WRX Metal Plug 503
WRX Plastic Plug 504



BIS Plugs

BIS XL 505
BIS Plasterboard Plug Startset 506
BIS TWIST 507
BIS CP 508
BIS ARAYPLAST 509
BIS Star Plug 510



BIS Hammer-in Studs

BIS Hammer-in Shoulder Stud 511
BIS Hammer-in Stud 512
BIS Nail Shoulder Stud 513

EN-SG 02/2022- Subject to modifications

WDI1 Drop-in Anchor

(L 03 05)

standard drop-in anchor



Features and Benefits

- simple and quick installation procedure
- medium load capacity
- no collar for anchor setting at greater hole depth
- material: steel
- zinc plated
- ETA ETAG001 Part 6 approval for multiple use for non-structural applications
- fire resistance class R30-R120 for design of anchorages under exposure to fire (M8-M16)
- substrate type:
  - cracked concrete
  - non-cracked concrete

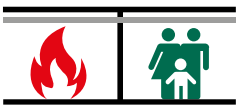



Part No.	Code	Size	L	d_0 (mm)	h_0 (mm)	h_{min} (mm)	h_{nom} (mm)	Rec. Tension Load C20/25 Concrete (kN)	ETA	Pack 1	Pack 2
6103006	WDI1 6x25	M6	25 mm	8	≥ 30	80	≥ 25	0.52*	ETA	100	2,400
6103008	WDI1 8x30	M8	30 mm	10	≥ 32	80	≥ 30	1.02*	ETA	100	600
6103010	WDI1 10x40	M10	40 mm	12	≥ 42	80	≥ 40	1.55*	ETA	50	500
6103012	WDI1 12x50	M12	50 mm	15	≥ 53	100	≥ 50	2.19*	ETA	50	300
6103016	WDI1 16x65	M16	65 mm	20	≥ 70	130	≥ 65	4.53*	ETA	25	200

** Recommended loads: are stated for multiple use for non-structural applications according to ETAG001, Part 6; apply to anchors correctly installed at maximum embedment depth; include partial safety factor and an overall partial safety factor for action of 1.4.*
The partial safety factor for action depends on the type of loading and shall be taken from national regulations. All anchor failure modes and the entire relevant product European Technical Assessment must be considered for anchor design.
For more information, please refer to the ETA report.

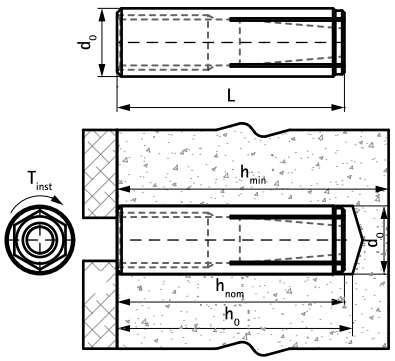

Complementary

473 WDI1 Setting Tool
488 WIS Brush
489 WIS Blow Pump

Complementary

494 WDI1 SD Stop Drill Bit
495 WSDS+ 3CE Concrete Drill Bit

EN-SG 02/2022- Subject to modifications

WDI1L Drop-in Anchor Lipped

(L 03 10)

standard drop-in anchor with a lip collar



Features and Benefits

- simple and quick installation procedure
- collar with a lip for flush anchor setting at any hole depth
- medium load capacity
- material: steel
- zinc plated
- ETA ETAG001 Part 6 approval for multiple use for non-structural applications
- fire resistance class R30-R120 for design of anchorages under exposure to fire (M8-M16)
- substrate type:
  - cracked concrete
  - non-cracked concrete



Part No.	Code	Size	L	d_0 (mm)	h_0 (mm)	h_{min} (mm)	h_{nom} (mm)	Rec. Tension Load C20/25 Concrete (kN)	Pack 1	Pack 2
6103106	WDI1L 6x25	M6	25 mm	8	≥ 30	80	≥ 25	0.52*	100	600
6103108	WDI1L 8x30	M8	30 mm	10	≥ 32	80	≥ 30	1.02*	100	600
6103110	WDI1L 10x40	M10	40 mm	12	≥ 42	80	≥ 40	1.55*	50	500
6103112	WDI1L 12x50	M12	50 mm	15	≥ 53	100	≥ 50	2.19*	50	300
6103116	WDI1L 16x65	M16	65 mm	20	≥ 70	130	≥ 65	4.53*	25	150

** Recommended loads: are stated for multiple use for non-structural applications according to ETAG001, Part 6; apply to anchors correctly installed at maximum embedment depth; include partial safety factor and an overall partial safety factor for action of 1.4.*
The partial safety factor for action depends on the type of loading and shall be taken from national regulations. All anchor failure modes and the entire relevant product European Technical Assessment must be considered for anchor design.
For more information, please refer to the ETA report.

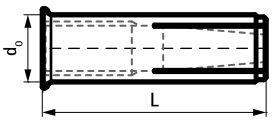

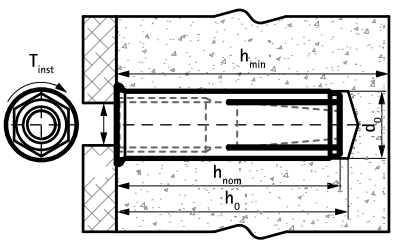

Complementary

473 WDI1 Setting Tool
488 WIS Brush
489 WIS Blow Pump

Complementary

494 WDI1 SD Stop Drill Bit
495 WSDS+ 3CE Concrete Drill Bit

EN-SG 02/2022- Subject to modifications

WDI1R Drop-in Anchor Short

(L 03 20)

reduced length drop-in anchor with a lip collar



Features and Benefits

- simple and quick installation procedure
- collar with a lip for flush anchor setting at any hole depth
- medium load capacity
- reduced 25 mm anchor length allows approved applications in precast prestressed hollow core slabs
- material: steel
- zinc plated
- ETA ETAG001 Part 6 approval for multiple use for non-structural applications
- fire resistance class R30-R120 for design of anchorages under exposure to fire
- complies with VdS CE 4001:2014-04 (05) and VdS CE 4001:2018-01 (06) for applications with sprinkler systems in concrete elements
- substrate type:
  - cracked concrete
  - non-cracked concrete

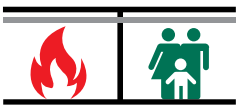



Part No.	Code	Size	L	d_0 (mm)	h_0 (mm)	h_{min} (mm)	h_{nom} (mm)	Rec. Tension Load C20/25 Concrete (kN)	ETA	Pack 1
6103206	WDI1R 6x25	M6	25 mm	8	≥ 25	80	≥ 25	1.67*	ETA	100
6103208	WDI1R 8x25	M8	25 mm	10	≥ 25	80	≥ 25	1.90*	ETA	100
6103210	WDI1R 10x25	M10	25 mm	12	≥ 25	80	≥ 25	2.14*	ETA	50
6103212	WDI1R 12x25	M12	25 mm	15	≥ 25	80	≥ 25	2.14*	ETA	50

** Recommended loads: are stated for multiple use for non-structural applications according to ETAG001, Part 6; apply to anchors correctly installed at maximum embedment depth; include partial safety factor and an overall partial safety factor for action of 1.4.*
The partial safety factor for action depends on the type of loading and shall be taken from national regulations. All anchor failure modes and the entire relevant product European Technical Assessment must be considered for anchor design.
For more information, please refer to the ETA report.

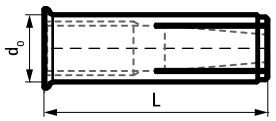

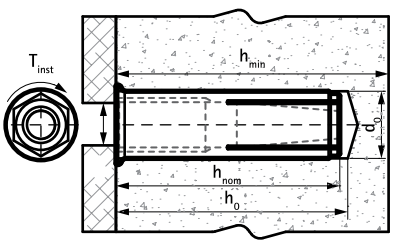

Complementary

474	WDI1R Setting Tool Set
488	WIS Brush
489	WIS Blow Pump

Complementary

494	WDI1 SD Stop Drill Bit
495	WSDS+ 3CE Concrete Drill Bit
475	WDI1R SD Stop Drill Bit

EN-SG 02/2022- Subject to modifications

WDI1 Setting Tool

(L 03 25)



Features and Benefits

- for setting Walraven WDI1 Drop-in Anchors

Part No.	Code	For	Pack 1
6902106	WDI1ST 6	WDI1 6x25	10
6902108	WDI1ST 8	WDI1 8x30	10
6902110	WDI1ST 10	WDI1 10x40	10
6902112	WDI1ST 12	WDI1 12x50	10
6902116	WDI1ST 16	WDI1 16x65	10

EN-SG 02/2022- Subject to modifications

WDI1R Setting Tool Set

(L 03 27)





Features and Benefits

- combined tool for drilling and setting WDI1R anchors
- 50% faster installation than with traditional methods
- no uncomfortable hammering in overhead installations

Part No.	Code	LU (mm)	d_0 (mm)	For	Pack 1	Pack 2
6902206	WDI1R STS 6	25	8	WDI1R M6	1	20
6902208	WDI1R STS 8	25	10	WDI1R M8	1	20
6902210	WDI1R STS 10	25	12	WDI1R M10	1	20

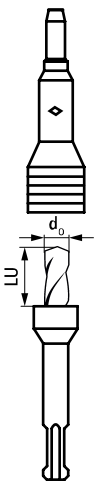

Complementary

472 WDI1R Drop-in Anchor Short
475 WDI1R SD Stop Drill Bit

EN-SG 02/2022- Subject to modifications

WDI1R SD Stop Drill Bit

(L 03 28)



Features and Benefits

- designed for drilling all concrete at controlled depth
- particularly suitable for high volume installations of WDI1R Drop-in Anchors
- can be used as a replacement drill bit for WDI1R STS Setting Tool Set

Part No.	Code	LU (mm)	d_0 (mm)	For	Pack 1	Pack 2
6902306	WDI1R SD 6	25	8	WDI1R M6	1	20
6902308	WDI1R SD 8	25	10	WDI1R M8	1	20
6902310	WDI1R SD 10	25	12	WDI1R M10	1	20

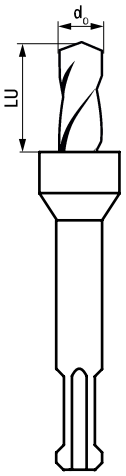

Complementary

472 WDI1R Drop-in Anchor Short
474 WDI1R Setting Tool Set

EN-SG 02/2022- Subject to modifications

WBA Brass Anchor

(L 03 30)

standard brass expansion anchor



Features and Benefits

- reduced anchor length requires less drilling
- for use with standard metric bolts and threaded rods
- does not require a setting tool
- knurled external surface provides improved grip and resists rotation in the hole
- material: brass
- corrosion resistant

Part No.	Code	Size	L	d_0 (mm)	h_0 (mm)	h_{min} (mm)	h_{nom} (mm)	Pack 1	Pack 2
6107006	WBA 6x22	M6	22 mm	8	≥ 27	100	≥ 22	100	1,600
6107008	WBA 8x28	M8	28 mm	10	≥ 32	100	≥ 28	100	1,600
6107010	WBA 10x32	M10	32 mm	12	≥ 35	100	≥ 32	100	800
6107012	WBA 12x38	M12	38 mm	15	≥ 40	100	≥ 38	50	400

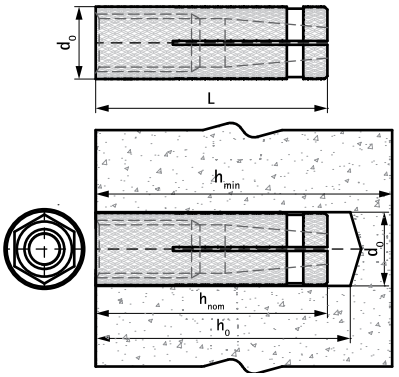

Complementary

488 WIS Brush
489 WIS Blow Pump
494 WDI1 SD Stop Drill Bit

Complementary

495 WSDS+ 3CE Concrete Drill Bit

EN-SG 02/2022- Subject to modifications

WSA1 Shield Anchor

(L 03 35)

heavy duty expansion anchor



Features and Benefits

- three-part expanding sleeve provides optimal load and safety of use in many substrates
- for use with metric threaded rods or bolts
- suitable for use in multiple base materials
- material: steel
- zinc plated
- substrate type:
  - concrete
  - hollow masonry
  - natural stone

Part No.	Code	Size	L	d_0 (mm)	h_0 (mm)	h_{min} (mm)	h_{nom} (mm)	Pack 1
6103608	WSA1 8x50	M8	50 mm	14	≥ 55	100.0	50	100
6103610	WSA1 10x60	M10	60 mm	16	≥ 65	100.0	60	100
6103612	WSA1 12x75	M12	75 mm	20	≥ 85	100.0	80	50
6103616	WSA1 16x115	M16	115 mm	25	≥ 125	142.5	120	25

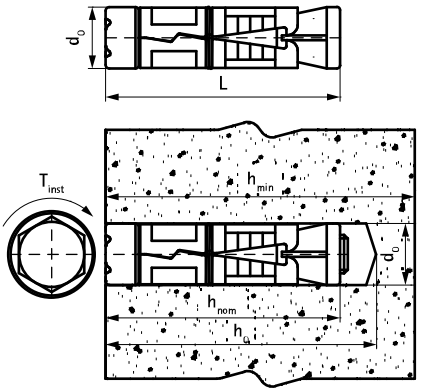

Complementary

488 WIS Brush
489 WIS Blow Pump
495 WSDS+ 3CE Concrete Drill Bit

WTB1 Throughbolt Anchor

(L 03 40)

high performance corrosion resistant expansion anchor for cracked concrete





Features and Benefits

- high load capacity
- pre- and through-fixing
- two embedment depths provide installation flexibility
- zinc-flake coated for improved corrosion resistance
- material: steel
- zinc plated with zinc flake
- ETA Option 1 approval for cracked and non-cracked concrete
- fire resistance class R30-R120 for design of anchorages under exposure to fire
- substrate type:
  - cracked concrete
  - non-cracked concrete
  - stone

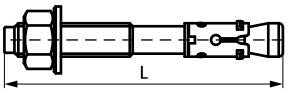

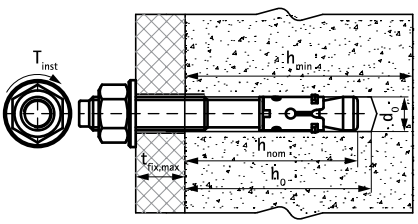

Part No.	Code	Size	L	d_0 (mm)	h_0 (mm)	h_{min} (mm)	h_{nom} (mm)	$t_{fix,max}$ (mm)	Rec. Tension Load C20/25 Uncracked Concrete (kN)	Rec. Tension Load C20/25 Cracked Concrete (kN)	Pack 1
609831080	WTB1 8x80	M8	80 mm	8	55	100	55	10	3.57*	1.98*	100
609831081	WTB1 8x100	M8	100 mm	8	55	100	55	35	3.57*	1.98*	100
609831082	WTB1 8x115	M8	115 mm	8	55	100	55	50	3.57*	1.98*	100
609831100	WTB1 10x95	M10	95 mm	10	69	120	69	15	5.71*	4.29*	50
609831101	WTB1 10x115	M10	115 mm	10	69	120	69	35	5.71*	4.29*	50
609831102	WTB1 10x130	M10	130 mm	10	69	120	69	50	5.71*	4.29*	50
609831120	WTB1 12x120	M12	120 mm	12	80	140	80	25	9.52*	5.71*	50
609831121	WTB1 12x135	M12	135 mm	12	80	140	80	40	9.52*	5.71*	50
609831160	WTB1 16x140	M16	140 mm	16	100	170	100	20	16.67*	9.52*	25

** Recommended loads: are stated for single anchors; apply to anchors correctly installed at maximum embedment depth; include partial safety factor and an overall partial safety factor for action of 1.4.*
The partial safety factor for action depends on the type of loading and shall be taken from national regulations. All anchor failure modes and the entire relevant product European Technical Assessment must be considered for anchor design.
For more information, please refer to the ETA report.

Complementary

488 WIS Brush
489 WIS Blow Pump
495 WSDS+ 3CE Concrete Drill Bit

EN-SG 02/2022- Subject to modifications

WTB7 Throughbolt Anchor

(L 03 45)

high performance expansion anchor for non-cracked concrete



Features and Benefits

- high load capacity
- pre- and through-fixing
- two embedment depths provide installation flexibility
- material: steel
- zinc plated
- ETA Option 7 approval for non-cracked concrete
- substrate type:
  - non-cracked concrete
  - stone

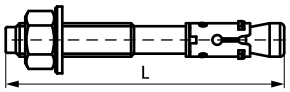

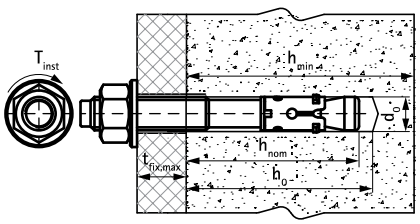

Part No.	Code	Size	L	d_0 (mm)	h_0 (mm)	h_{min} (mm)	h_{nom} (mm)	$t_{fix,max}$ (mm)	Rec. Tension Load C20/25 Uncracked Concrete (kN)	Pack 1
609837080	WTB7 8x75	M8	75 mm	8	55	100	55	10	4.76*	100
609837081	WTB7 8x95	M8	95 mm	8	55	100	55	30	4.76*	100
609837082	WTB7 8x115	M8	115 mm	8	55	100	55	50	4.76*	100
609837100	WTB7 10x95	M10	95 mm	10	59	100	59	25	4.76*	50
609837101	WTB7 10x115	M10	115 mm	10	59	100	59	45	4.76*	50
609837102	WTB7 10x130	M10	130 mm	10	59	100	59	60	4.76*	50
609837120	WTB7 12x100	M12	100 mm	12	80	136	80	5	9.92*	50
609837121	WTB7 12x120	M12	120 mm	12	80	136	80	25	9.92*	50
609837122	WTB7 12x150	M12	150 mm	12	80	136	80	55	9.92*	50
609837123	WTB7 12x180	M12	180 mm	12	80	136	80	85	9.92*	50
609837160	WTB7 16x150	M16	150 mm	16	100	170	100	30	15.71*	25

** Recommended loads: are stated for single anchors; apply to anchors correctly installed at maximum embedment depth; include partial safety factor and an overall partial safety factor for action of 1.4.*
The partial safety factor for action depends on the type of loading and shall be taken from national regulations. All anchor failure modes and the entire relevant product European Technical Assessment must be considered for anchor design.
For more information, please refer to the ETA report.

Complementary

488 WIS Brush
489 WIS Blow Pump
494 WDI1 SD Stop Drill Bit

Complementary

495 WSDS+ 3CE Concrete Drill Bit

WHA1H Highload Anchor

(L 03 54)

ultimate performance anchor for cracked concrete and seismic conditions





Features and Benefits

- very high load capacity
- material: steel
- zinc plated
- ETA Option 1 approval for cracked and non-cracked concrete
- fire resistance class R30-R120 for design of anchorages under exposure to fire
- seismic performance categories C1 and C2 for design of anchorages under seismic action
- substrate type:
  - cracked concrete
  - non-cracked concrete

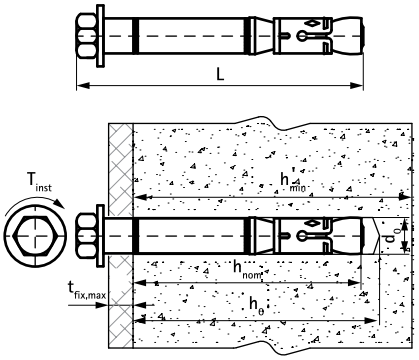

Part No.	Code	Size	L	d_0 (mm)	h_0 (mm)	h_{min} (mm)	h_{nom} (mm)	$t_{fix,max}$ (mm)	Rec. Tension Load C20/25 Uncracked Concrete (kN)	Rec. Tension Load C20/25 Cracked Concrete (kN)	Pack 1
609832120	WHA1H 12x85	M8	85 mm	12	80	120	70	10	9.52*	5.71*	50
609832121	WHA1H 12x125	M8	125 mm	12	80	120	70	50	9.52*	5.71*	25
609832150	WHA1H 15x110	M10	110 mm	15	95	140	85	15	14.29*	7.62*	25
609832151	WHA1H 15x136	M10	136 mm	15	95	140	85	45	14.29	7.62*	25
609832180	WHA1H 18x117	M12	117 mm	18	105	160	95	10	17.20*	12.26*	20

** Recommended loads: are stated for single anchors; apply to anchors correctly installed at maximum embedment depth; include partial safety factor and an overall partial safety factor for action of 1.4.*
The partial safety factor for action depends on the type of loading and shall be taken from national regulations. All anchor failure modes and the entire relevant product European Technical Assessment must be considered for anchor design.
For more information, please refer to the ETA report.

Complementary

488 WIS Brush
489 WIS Blow Pump
494 WDI1 SD Stop Drill Bit

Complementary

495 WSDS+ 3CE Concrete Drill Bit

EN-SG 02/2022- Subject to modifications

WCA1 Ceiling Anchor

(L 03 80)

economical ceiling hammer-set anchor



Features and Benefits

- through-fixing
- simple and quick installation procedure
- correct anchor installation can be verified by simple visual check
- medium load capacity
- material: steel
- zinc plated
- ETA ETAG001 Part 6 approval for multiple use for non-structural applications
- fire resistance class R30-R120 for design of anchorages under exposure to fire
- substrate type:
  - cracked concrete
  - non-cracked concrete



Part No.	Code	Size	L	d_0 (mm)	h_0 (mm)	h_{min} (mm)	h_{nom} (mm)	$t_{fix,max}$ (mm)	Rec. Tension Load C20/25 Concrete (kN)	Pack 1	Pack 2
60963604	WCA1 6x40	6	36 mm	6	≥ 40	100	≥ 32	4.5	1.43*	100	1,600
60963665	WCA1 6x65	6	65 mm	6	≥ 40	100	≥ 32	35.0	1.43*	50	800

** Recommended loads: are stated for multiple use for non-structural applications according to ETAG001, Part 6; apply to anchors correctly installed at maximum embedment depth; include partial safety factor and an overall partial safety factor for action of 1.4.*
The partial safety factor for action depends on the type of loading and shall be taken from national regulations. All anchor failure modes and the entire relevant product European Technical Assessment must be considered for anchor design.
For more information, please refer to the ETA report.

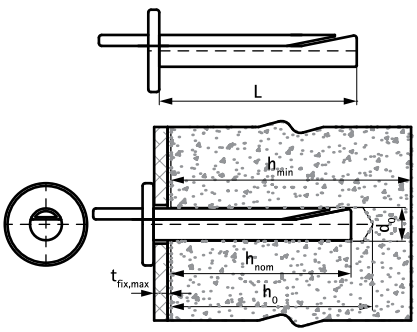

Complementary

495 WSDS+ 3CE Concrete Drill Bit

WHC Hollow Core Anchor

(L 03 81)

for hollow core concrete slabs



Features and Benefits

- designed specifically for use in precast pre-stressed hollow core concrete slabs
- very high load capacity
- fire resistance class R30-R120 for design of anchorages under exposure to fire

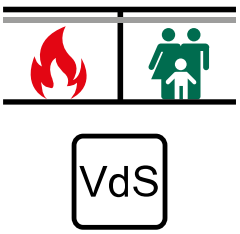

Part No.	Code	Thread (M)	L	d_0 (mm)	h_0 (mm)	T_{inst} (Nm)	Pack 1
6096408	WHC	M8	44 mm	12	55	20	50
6096410	WHC	M10	53 mm	16	60	30	50
6096412	WHC	M12	58 mm	18	70	40	25

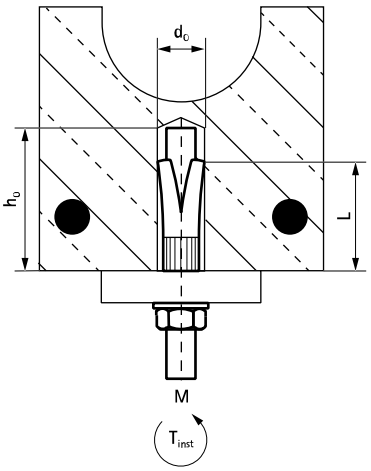

Complementary

448 BIS Threaded Rod
429 BIS Hexagon Nut
492 WIS Threaded Rod

EN-SG 02/2022- Subject to modifications

WGB-M Aerated Concrete Anchor

(L 03 82)





Features and Benefits

- internal thread connection allows flexible distance from the anchor to the fixture
- load can be applied immediately after installation
- installation does not require drilling
- four-way expansion provides high permissible loads, even in tesnile areas of roofs and ceilings
- high load safety due to undercutting expansion
- material: steel
- zinc plated
- fire resistance class R30-R120 for design of anchorages under exposure to fire
- VdS approval for applications with stationary fire extinguishing systems

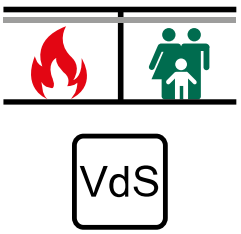

Part No.	Code	d (mm)	Thread (M)	$l_{s,min}$ (mm)	h_{min} (mm)	T_{inst} (Nm)	Pack 1
6103510	WGB-M	16	M10	10-18	175	8	25
6103512	WGB-M	16	M12	12-18	175	8	25

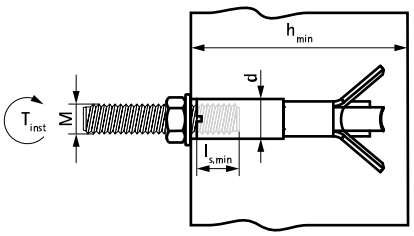

Complementary

484 WGB-M Setting Tool
492 WIS Threaded Rod
429 BIS Hexagon Nut

WGB-M Setting Tool

(L 03 83)



Features and Benefits

- for use with WGB-M M10 or M12 aerated concrete anchors
- solid metal construction ensures high durability and many years of service

Part No.	Code	Size	Pack 1
6902511	WGB-M ST	M10/12	20

Complementary

483 WGB-M Aerated Concrete Anchor

EN-SG 02/2022- Subject to modifications

WIS Chemical Anchor WPSF100

(L 03 85)

universal chemical anchoring system for non-cracked concrete and masonry.



Features and Benefits

- reduced edge and anchor spacing distances
- always correct mixing ratio thanks to the static mixer nozzle
- for use with industry-standard silicone dispensing guns
- installations in wet and flooded holes without loss of load capacity
- cartridge may be used up over several times (each installation after a break requires new mixing nozzle)
- ETA Option 7 approval for non-cracked concrete
- A+ VOC emissions class
- ETA ETAG029 approval for hollow and solid masonry
- tested according to LEED 2009 EQ c4.1, SCAQMD rule 1168 (2005)
- substrate type:
  - non-cracked concrete
  - solid masonry
  - hollow masonry

Part No.	Code	ETA	LEED	VOC+	Cont.	Pack 1
6099113	WPSF100	ETA	LEED	VOC+	300 ml	12
For more information, please refer to the ETA report.						

Complementary

487 WIS Extension Pipe
488 WIS Brush
489 WIS Blow Pump

Complementary

490 WIS Dispenser Gun
491 WIS Plastic Mesh Sleeve
492 WIS Threaded Rod

WIS Chemical Anchor WVSF200

(L 03 90)

high performance chemical anchoring system for cracked concrete and rebar connections



Features and Benefits

- reduced edge and anchor spacing distances
- always correct mixing ratio thanks to the static mixer nozzle
- approved for use with rebars as anchors in non-cracked concrete
- cartridge may be used up over several times (each installation after a break requires new mixing nozzle)
- ETA Option 1 approval for cracked and non-cracked concrete
- A+ VOC emissions class
- ETA TR023 for post-installed rebar connections
- seismic performance category C1 for design of anchorages under seismic action
- tested according to LEED 2009 EQ c4.1, SCAQMD rule 1168 (2005)
- WRAS Material Approval for contact with potable water
- substrate type:
  - cracked concrete
  - non-cracked concrete

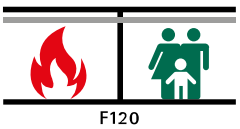



Part No.	Code	ETA	LEED	WRAS	VOC+	Seismic	Cont.	Pack 1
6099123	WVSF200	ETA	LEED	WRAS	VOC+	C1	300 ml	12

For more information, please refer to the ETA report.

Complementary

487 WIS Extension Pipe
488 WIS Brush
489 WIS Blow Pump

Complementary

490 WIS Dispenser Gun
491 WIS Plastic Mesh Sleeve
492 WIS Threaded Rod

EN-SG 02/2022- Subject to modifications

WIS Extension Pipe

(L 03 105)

Features and Benefits

- fits standard and epoxy nozzles

Part No.	Code	L	Pack 1
6099992	WIS EP	185 mm	12

WIS Brush

(L 03 110)



Features and Benefits

- each brush suitable for cleaning two hole diameters
- hybrid brush (steel and natural bristle)
- Part No. 6099981: single brush for M12 and M16 hole
- Part No. 6099982: single brush for M20 and M24 hole
- Part No. 6099980: single brush for M8 and M10 hole

Part No.	Code	L	For Drill Hole Ø (mm)	(mm)	(mm)	For	Pack 1
6099980	WIS BR M8/10	300 mm	10/12	14	120	M8/M10	1
6099981	WIS BR M12/16	300 mm	14/18	20	120	M12/M16	1
6099982	WIS BR M20/24	300 mm	22/26	29	120	M20/M24	1

EN-SG 02/2022- Subject to modifications

WIS Blow Pump

(L 03 115)



Features and Benefits

- high blowing capacity

Part No.	Code	Pack 1
6099985	WIS BP	1

WIS Dispenser Gun

(L 03 120)



Features and Benefits

- the 26:1 thrust ratio makes dispensing tools easy to use
- no free-play allows dispensing with precision
- metal backplate improves tool durability
- metal piston pushers extrude cartridges at correct angle
- metal trigger (not aluminum) improves tool durability
- thick 5 mm chamfered push plate with rubber pads improves tool durability

Part No.	Code	For	Pack 1
6099986	WIS DG 300ml	Cartridge 300ml	1
6099988	WIS DG 410ml	Cartridge 410ml	1
6099989	WIS DG 585ml	Cartridge 385/585ml	1

EN-SG 02/2022- Subject to modifications

WIS Plastic Mesh Sleeve

(L 03 125)

16 - 20 mm

Features and Benefits

- end cap prevents resin leaking out of the sleeve in overhead installations
- for use with WPSF100 & WVSF200 chemical anchoring systems in hollow substrates
- sleeves for M8, M10 and M12 threaded rods

Part No.	Code	D (mm)	L	For	Pack 1
6097017	WIS PS 16x85	16	85 mm	M8, M10 threaded bar	10
6097018	WIS PS 16x130	16	130 mm	M8, M10 threaded bar	10
6097020	WIS PS 20x85	20	85 mm	M12 threaded bar	10

EN-SG 02/2022- Subject to modifications

WIS Threaded Rod

(L 03 130)

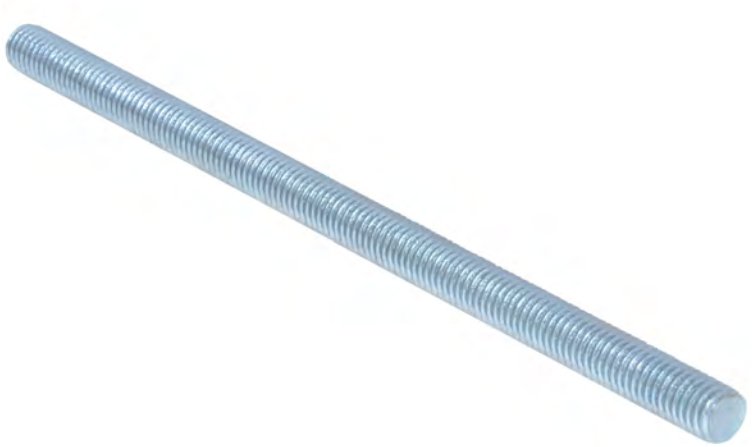

Features and Benefits

- according to DIN 976-1
- thread with 60° angle provides best performance
- material: steel, strength class 8.8
- zinc plated

Part No.	Code	Thread (M)	L	$A_{s,nom}$ (mm2)	$F_{a,z}$ (N)	BndS
63039108	WIS TR M8x1000	M8	1 m	36.6	19,500	50
63039110	WIS TR M10x1000	M10	1 m	58.0	30,900	25
63039112	WIS TR M12x1000	M12	1 m	84.3	45,000	20
63039116	WIS TR M16x1000	M16	1 m	157.0	83,700	20

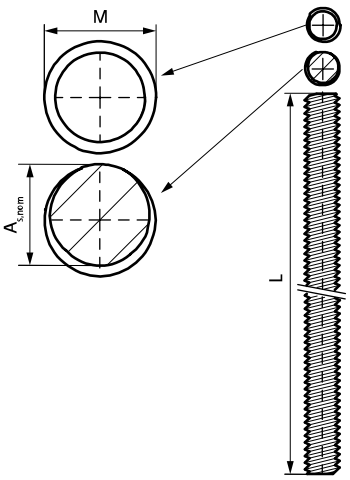

Complementary
495 WSDS+ 3CE Concrete Drill Bit

Alternative
583 WIS Threaded Rod SSt

EN-SG 02/2022- Subject to modifications

WIS Stud Bolt

(L 03 140)

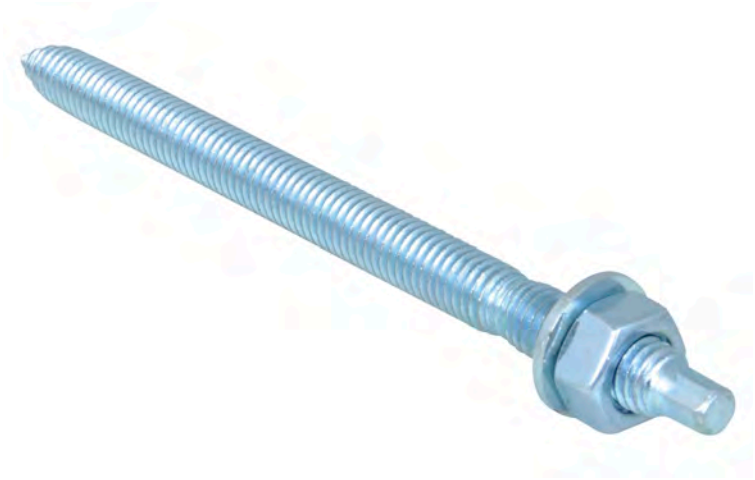

Features and Benefits

- pre-assembled nut and washer allow faster installation
- material: steel, strength class 5.8
- zinc plated

Part No.	Code	Thread (M)	L	$A_{s,nom}$ (mm2)	$F_{a,z}$ (N)	Pack 1	Pack 2
60990811	WIS SB M8x110	M8	110 mm	36.6	12,200	10	160
60991013	WIS SB M10x130	M10	130 mm	58.0	19,300	10	160
60991016	WIS SB M10x160	M10	160 mm	58.0	19,300	10	80
60991219	WIS SB M12x190	M12	190 mm	84.3	28,100	10	80
60991622	WIS SB M16x220	M16	220 mm	157.0	52,300	10	80

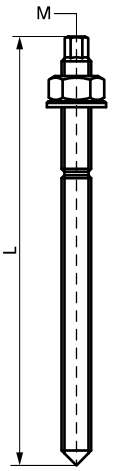

Complementary

495 WSDS+ 3CE Concrete Drill Bit

EN-SG 02/2022- Subject to modifications

WDI1 SD Stop Drill Bit

(L 03 145)



Features and Benefits

- three cutting edges increase drilling speed
- designed for drilling all concrete at controlled depth
- particularly suitable for high volume installations of anchors such as WDI1
- carbide tip with precision centering point resists overheating and provides trajectory control

Part No.	Code	L	LU (mm)	d_0 (mm)	For	Pack 1	Pack 2
6951010	WDI1 SD 10x110/S	110 mm	32	10	WDI1 M8	10	150
6951012	WDI1 SD 12x130/S	130 mm	42	12	WDI1 M10	10	150

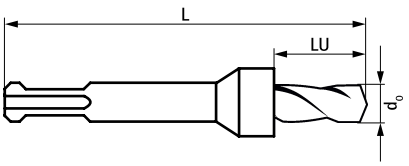

EN-SG 02/2022- Subject to modifications

WSDS+ 3CE Concrete Drill Bit

(L 03 150)



Features and Benefits

- three cutting edges increase drilling speed
- designed for drilling all concrete
- drills through rebar without getting stuck
- carbide tip with precision centering point resists overheating and provides trajectory control
- three flute zone for fast dust evacuation, accelleration, and extraction

Part No.	Code	L	LU (mm)	d_0 (mm)	Pack 1	Pack 2
69520611	WSDS+6x110/3CE	110 mm	50	6	1	250
69520616	WSDS+6x160/3CE	160 mm	100	6	1	200
69520621	WSDS+6x210/3CE	210 mm	150	6	1	150
69520816	WSDS+8x160/3CE	160 mm	100	8	1	200
69520821	WSDS+8x210/3CE	210 mm	150	8	1	150
69521021	WSDS+10x210/3CE	210 mm	150	10	1	100
69521026	WSDS+10x260/3CE	260 mm	200	10	1	100
69521216	WSDS+12x160/3CE	160 mm	100	12	1	150
69521221	WSDS+12x210/3CE	210 mm	150	12	1	100
69521226	WSDS+12x260/3CE	260 mm	200	12	1	100
69521621	WSDS+16x210/3CE	210 mm	150	16	1	100
69521626	WSDS+16x260/3CE	260 mm	200	16	1	100

EN-SG 02/2022- Subject to modifications

WCA1 Ceiling Anchor

(L 05 18)

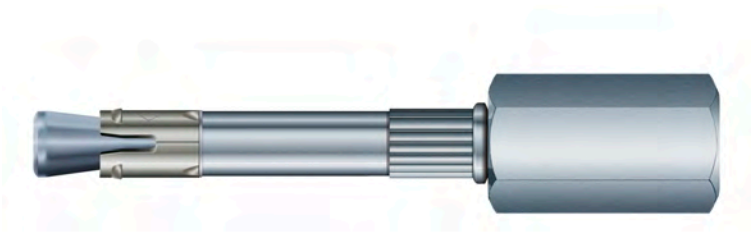

Features and Benefits

- for suspending ceilings and fixing pipes and cable trays on walls and ceilings
- fast and simple mounting
- up to 40 seconds faster mounting compared to conventional anchors
- one product for two ports: M8 / M10 threaded stages
- nail anchor with double thread
- combined with double thread M8/10 with M8 and M10 threaded rods
- nail anchor expands automatically under load, and anchored in the borehole
- reduced anchorage depth of only 25 mm and drill hole depth of 35 mm
- no concrete reinforcement hits
- very small edge and axial spacings
- European Technical Approval for multiple fixings in cracked concrete

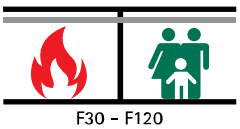

ETA-11/0240

N-M

Part No.	L	LU (mm)	HØ (mm)	h_0 (mm)	For	$F_{a,z}$ (N)	Fa,z (F30 - (N))	$F_{a,x}$ (N)	CE	ETA	Pack 1	Pack 2
6096300800	58 mm	25	6	35	M8 + M10 Threaded parts	2,140	600	7,300	CE	ETA	100	900

Max. allowed load ($F_{a,z}$) refers to a concrete grade of C20 / 25th. In case of fire (F60 - F120) values will significantly decrease. For detailled information please see ETA-11/0240th.

EN-SG 02/2022- Subject to modifications

BIS HK

(L 05 60)

fixing to concrete, brick







Features and Benefits

- for fixing of steel wire, suspension band or chain in concrete and solid stone
- for suspension of static loads such as air ducts, lowered ceilings, etc. to concrete
- also suitable for outside use
- drill 8 mm hole and hammer in HK wire anchor
- HK: for cables / BIS DobyGrip
- material: stainless steel 1.4401 (AISI 316)
- better fire resistance than plastic plugs
- tested by CSTB
  - test report EPOD/06-05 (HK)

CSTB
le futur en construction

HK: Report EPOD/-6-05

Part No.	Model	$F_{a,z}$ (N)	$F_{a,x}$ (N)	CSTB	Pack 1	Pack 2
61073134	HK, without cap	800	800	CSTB	200	1,200
61073224	HK, with cap	800	800	CSTB	100	600

Max. allowed load (Fa) in concrete (350 kg/m³), drill hole Ø 8 mm. Safety margin 1:4.

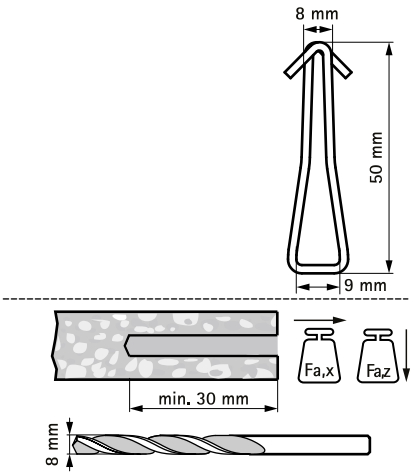

Complementary

377 BIS Suspension Band - Plated
439 BIS Chain (DIN 5685)
458 BIS DobyGrip Loop

Complementary

460 BIS DobyGrip Snap End Hook
461 BIS DobyGrip Wire Reel

WUP Uni Plug

(L 07 05)

standard universal anchor for all types of substrates



Features and Benefits

- high load capacity
- can be used with wood screws, chipboard screws and metric bolts
- suitable for variety of substrates
- easily slides into holes
- does not slip past collar in deep holes
- does not expand prematurely
- resists rotation in holes
- Application:
  - shelves
  - wall-mounted cabinets
  - sanitary fixings
  - HVAC and plumbing fixings
- material: high quality PA6 polyamide
- substrate type:
  - lightweight concrete
  - concrete
  - masonry
  - hollow masonry
  - rock
  - sand-lime bricks
  - natural stone
  - gypsum

Part No.	Code	L	d_0 (mm)	h_0 (mm)	$d_{s,w}$ (mm)	$d_{s,m}$ (mm)	$l_{s,min}$ (mm)	Rec. Tension Load Solid Brick (kN)	Rec. Tension Load Perforated Brick (kN)	Rec. Tension Load C20/25 Concrete (kN)	Rec. Tension Load Lightweight Concrete (kN)	Rec. Tension Load Sandstone (kN)	Pack 1	Pack 2
6100706	WUP 6x30	30 mm	6	40	3.5 - 5.0	M4	34	0.90	0.20	0.45	0.12	0.70	100	3,600
6100708	WUP 8x40	40 mm	8	50	4.5 - 6.0	-	44	1.00	0.40	1.15	0.19	1.00	100	3,600
6100710	WUP 10x50	50 mm	10	70	6.0 - 8.0	-	54	1.10	0.45	1.90	0.30	1.80	50	1,800
6100712	WUP 12x60	60 mm	12	70	8.0 - 10.0	-	64	1.50	0.50	2.70	0.40	2.10	25	900

Given recommended tension loads have been reached using a maximum diameter wood screw and include a safety factor of 5.

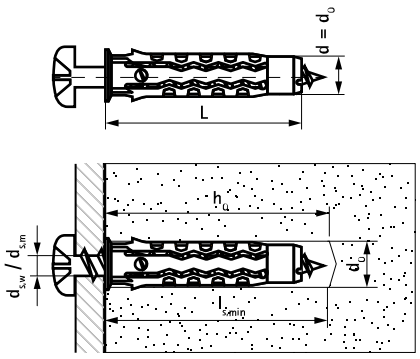

EN-SG 02/2022- Subject to modifications

WEP Expansion Plug

(L 07 20)

economical expansion anchor for all types of substrates



Features and Benefits

- can be used with wood screws, chipboard screws and metric bolts
- suitable for solid substrates
- does not expand prematurely
- resists rotation in holes
- Application:
  - shelves
  - wall-mounted cabinets
  - sanitary fixings
  - HVAC and plumbing fixings
- material: high quality PA6 polyamide
- substrate type:
  - lightweight concrete
  - concrete
  - masonry
  - hollow masonry
  - rock
  - sand-lime bricks
  - natural stone
  - gypsum

Part No.	Code	L	d_0 (mm)	h_0 (mm)	$d_{s,w}$ (mm)	$d_{s,m}$ (mm)	$l_{s,min}$ (mm)	Rec. Tension Load Solid Brick (kN)	Rec. Tension Load C20/25 Concrete (kN)	Rec. Tension Load Lightweight Concrete (kN)	Pack 1	Pack 2
61001005	WEP 5x25	25 mm	5	35	2.6 - 4.0	M3	29	0.20	0.35	0.04	100	3,600
61001006	WEP 6x30	30 mm	6	40	3.5 - 5.0	M4	34	0.40	0.60	0.06	100	3,600
61001008	WEP 8x40	40 mm	8	55	4.5 - 6.0	M5	44	0.60	0.85	0.09	100	3,600
61001010	WEP 10x50	50 mm	10	65	6.0 - 8.0	M6	54	0.80	1.40	0.20	50	1,800
61001012	WEP 12x60	60 mm	12	80	8.0 - 10.0	M8	64	1.00	1.80	0.40	25	900
61001014	WEP 14x70	70 mm	14	90	10.0 - 12.0	M10	74	1.30	2.60	0.50	20	720

Given recommended tension loads have been reached using a maximum diameter wood screw and include a safety factor of 5.

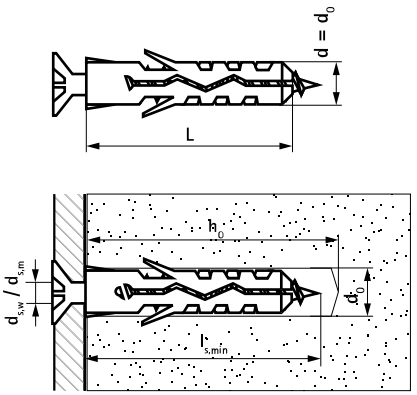

WNP Nail Plug

(L 07 15)

easy to install hammer-set anchor



Features and Benefits

- quick and easy to install
- pre-assembled
- through-fixing
- long expansion zone provides stability
- can be adjusted or dismantled
- Application:
  - skirtings
  - cable clamps
  - profiles
  - cabinets
- material: steel
- material: high quality PA6 polyamide
- zinc plated
- substrate type:
  - concrete
  - masonry
  - hollow masonry
  - rock
  - sand-lime bricks
  - natural stone

Part No.	Code	L	d_0 (mm)	h_0 (mm)	$h_{nom,min}$ (mm)	$t_{fix,max}$ (mm)	Drive	Rec. Tension Load Solid Brick (kN)	Rec. Tension Load C20/25 Concrete (kN)	Rec. Tension Load Sandstone (kN)	Pack 1	Pack 2
62230604	WNP 6x40	40 mm	6	50	30	10	PZ2	0.25	0.30	0.20	100	1,800
62230606	WNP 6x60	60 mm	6	70	30	30	PZ2	0.25	0.30	0.20	100	1,200
62230806	WNP 8x60	60 mm	8	70	40	20	PZ2	0.30	0.40	0.25	100	900
62230808	WNP 8x80	80 mm	8	90	40	40	PZ2	0.30	0.40	0.25	100	600
62230810	WNP 8x100	100 mm	8	110	40	60	PZ2	0.30	0.40	0.25	100	600

Given recommended loads include a safety factor of 5.

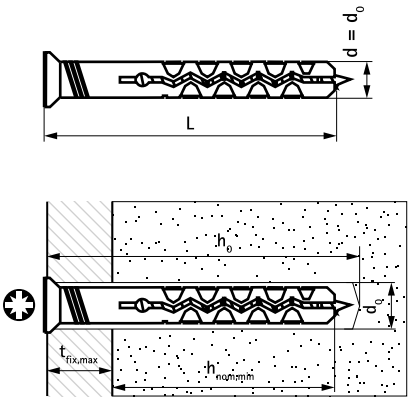

EN-SG 02/2022- Subject to modifications

WPF Plasterboard Fixings

(L 07 22)

A classic hammer-in fixing for plasterboard



Features and Benefits

- quick and easy to install
- central thread guide provides optimum screw positioning
- does not require drilling
- sharp tip allows precise installation
- for use with ø 3.5-5.0 mm wood or chipboard screws
- Application:
  - interior decorations
  - pictures
  - lamps
  - electrical fittings
- material: steel
- zinc plated
- substrate type:
  - plasterboard

Part No.	Code	Model	L	$d_{s,w}$ (mm)	l_s (mm)	$l_{s,min}$ (mm)	h_{max} (mm)	$t_{fix,max}$ (mm)	Drive	Rec. Tension Load Plasterboard (h=12.5mm) (kN)	Pack 1	Pack 2
6110063	WPF 12x30	Screw excluded	30 mm	3.5 - 5.0	-	27	12.5	-	-	0.102*	200	4,800
6110092	WPF 12x30	Screw excluded	30 mm	3.5 - 5.0	-	27	12.5	-	-	0.102*	3,000	-
6110234	WPF 12x30 /4x30	Screw included	30 mm	4.0	30	27	12.5	3	PZ2	0.102*	25	3,750
6110263	WPF 12x30 /4x30	Screw included	30 mm	4.0	30	27	12.5	3	PZ2	0.102*	200	4,800
6110334	WPF 12x30 /4x50	Screw included	30 mm	4.0	50	27	12.5	23	PZ2	0.102*	25	3,750

** Recommended loads are for tension, have been reached using a 4.0 mm diameter wood screw and include a safety factor of 2.*

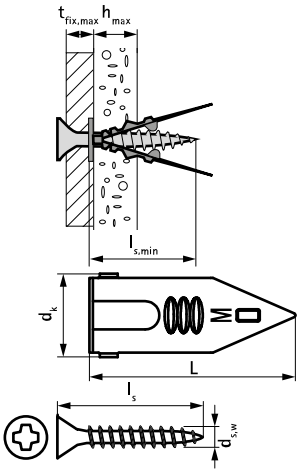

WCP Cavity Plug

(L 07 25)

metal anchor with screw for cavity walls



Features and Benefits

- high load capacity and security
- usable with various screwdriver bit types
- Application:
  - shelves
  - wall-mounted cabinets
  - sanitary fixings
  - HVAC and plumbing fixings
- material: steel
- zinc plated
- substrate type:
  - hollow masonry
  - chipboard
  - plasterboard

Part No.	Code	L	d_0 (mm)	$d_{s,m}$ (mm)	$h_{min,max}$ (mm)	$t_{fix,max}$ (mm)	Drive	Rec. Tension Load Vertically Perforated Brick (Hlz 12) (kN)	Rec. Tension Load Cement Fiberboard (h=12mm) (kN)	Rec. Tension Load Chipboard (h=13mm) (kN)	Rec. Tension Load Plasterboard (h=12.5mm) (kN)	Pack 1	Pack 2
6105400	WCP 4x35	35 mm	8	M4	4 - 9	16	Philips	-	0.35	0.20	0.15	100	1,200
6105501	WCP 5x37	37 mm	10	M5	5 - 13	20	Philips	-	0.40	0.25	0.18	100	1,200
6105502	WCP 5x50	50 mm	10	M5	5 - 18	26	Philips	-	0.40	0.25	0.18	100	900
6105601	WCP 6x37	37 mm	12	M6	4 - 13	16	Philips	0.70	0.42	0.28	0.20	100	900
6105603	WCP 6x63	63 mm	12	M6	16 - 32	28	Philips	0.70	0.42	0.28	0.20	100	300

Given recommended loads include a safety factor of 3.

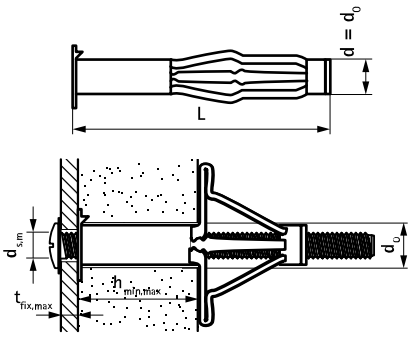

EN-SG 02/2022- Subject to modifications

WRX Metal Plug

(L 07 30)

metal self-drilling anchor



Features and Benefits

- self-drilling
- back twist lock allows screw removal without movement of the plug
- sharp tip allows accurate positioning and installation
- Application:
  - interior decorations
  - electrical fittings
- material: die-cast zinc
- substrate type:
  - lightweight concrete
  - gypsum
  - chipboard
  - plasterboard

Part No.	Code	L	$d_{s,w}$ (mm)	l_s (mm)	h_{min} (mm)	Drive	Rec. Tension Load Chipboard (6mm pre drilling) (kN)	Rec. Tension Load Lightweight Concrete (kN)	Rec. Tension Load Gypsum Fiberboard (kN)	Rec. Tension Load Plasterboard (h=12.5mm) (kN)	Pack 1	Pack 2
6229903	WRX MP 14x32	32 mm	4.5	30	12.5	PZ2	0.45	0.10	0.15	0.10	100	2,400
Given recommended loads include a safety factor of 3.												

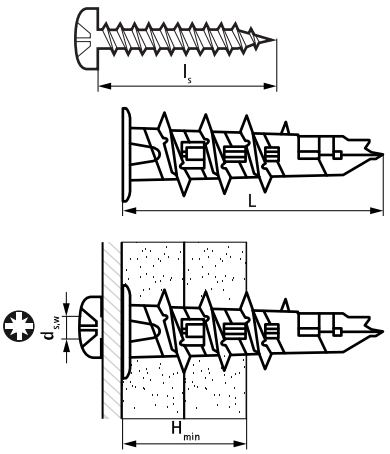

WRX Plastic Plug

(L 07 35)

plastic self-drilling anchor



Features and Benefits

- self-drilling
- back twist lock allows screw removal without movement of the plug
- sharp tip allows accurate positioning and installation
- Application:
  - interior decorations
  - electrical fittings
- material: PA (polyamide) with fiber-glass reinforcement
- substrate type:
  - plasterboard

Part No.	Code	L	$d_{s,w}$ (mm)	l_s (mm)	h_{min} (mm)	Drive	Rec. Tension Load Plasterboard (h=12.5mm) (kN)	Pack 1	Pack 2
6229904	WRX PP 14x32	32 mm	4.5	30	12.5	PZ2	0.09	100	2,400
Given recommended loads include a safety factor of 3.									

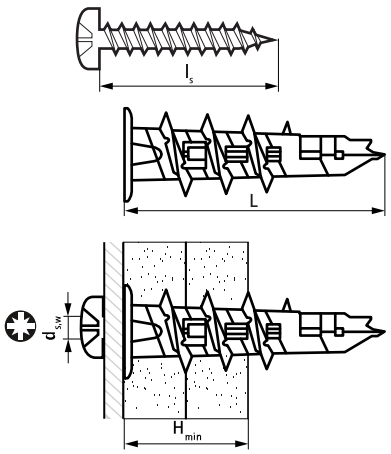

EN-SG 02/2022- Subject to modifications

BIS XL

(L 10 12)

fixing to double plaster board > 13 mm





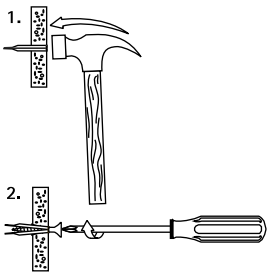

Features and Benefits

- hammer-in plug
- for heavy applications
  - applications: pipe fixings, radiators, heaters, airco-units, etc.
- for chipboard screw (Ø 4.0 - 5.0 mm, min. length 45 mm)
- easy and quick to use
  - no drill
  - plug anchors itself when tightening the screw
  - does not rotate on screwing
- material: steel
- better fire resistance than plastic plugs
- zinc plated

Part No.	Model	s (mm)	Lh (mm)	$F_{a,z}$ (N)	$F_{a,x}$ (N)	Pack 1	Pack 2
6114121	Incl. screws (TF)	4.0	50	250	700	12	120
6114143	Incl. screws (TF)	4.0	50	250	700	100	600
6114031	Without Screws	-	-	250	700	50	250
6114053	Without Screws	-	-	250	700	150	900
6114092	Without Screws	-	-	250	700	-	bulk
Max. allowed load in plasterboard (safety margin 1:2).							

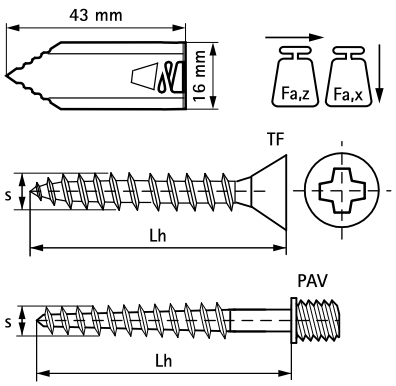

Complementary

77 starQuick® Clamp (Grey)

BIS Plasterboard Plug Startset

(L 10 14)



Features and Benefits

- easy and quick to use
  - no drilling needed, just hammer-in and screw
  - plug anchors itself when tightening the screw
  - does not rotate on screwing
  - versatile, quick and reliable!
- 100 pieces of various hammer-in plugs including screws
- set consists of various plugs for use in medium and heavy applications:
  - 50 pieces WPF incl. screws
  - 50 pieces BIS XL incl. screws

Part No.	Model	Pack 1	Pack 2
61863002	BIS Plasterboard Plugs Startset English	1	11





EN-SG 02/2022- Subject to modifications

BIS TWIST

(L 10 20)

fixing to concrete, brick







Features and Benefits

- easy and quick to use
  - plug anchors itself when tightening the screw
  - does not rotate on screwing
- for (middle)heavy fixings in solid or hollow materials
- pre-drill hole Ø 8 mm or 10 mm and insert plug
- stays in position, when screw is removed
- with flat head
- with collar to prevent plug from falling into hollow space
- suitable for metric thread and chipboard screws
- expands in solid materials, strip up in hollow materials
- HØ 10mm: torque is max. 7.5 Nm
- material: steel
- better fire resistance than plastic plugs
- surface treatment: zinc plated, white passivated

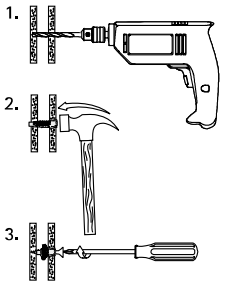

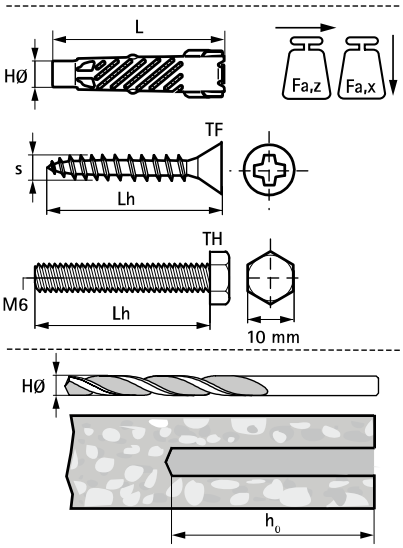

Part No.	Model	L	s (mm)	Lh (mm)	HØ (mm)	h_0 (mm)	$T_{(max.)}$ (Nm)	$F_{a,z}$ (N)	$F_{a,x}$ (N)	Pack 1	Pack 2
6119141	Incl. screws (TF) and washers	45 mm	5.0	60	8	55	7.5	570	1,130	12	120
6119641	Incl. screws (TF) and washers	50 mm	6.0	70	10	65	7.5	570	1,130	10	100
6119653	Incl. screws (TF) and washers	50 mm	6.0	70	10	65	7.5	570	1,130	50	300
6119731	Incl. bolts (TH) and washers	50 mm	6.0	60	10	60	7.5	600	1,520	10	100
6119753	Incl. bolts (TH) and washers	50 mm	6.0	60	10	60	7.5	600	1,520	50	300

Max. allowed load (Fa) in brick (safety margin 1:2).
Other materials on demand.

BIS CP

(L 10 24)

fixing to aerated concrete, plaster block





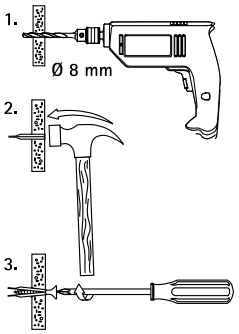

Features and Benefits

- hammer-in plug
- for medium applications into plaster block or aerated concrete block
- for chipboard screw (Ø 4.0 - 5.0 mm, min. length 45 mm)
- easy and quick to use
  - plug anchors itself when tightening the screw
  - does not rotate on screwing
- pre-drill hole Ø 8 mm to avoid breaking of material during screwing
- material: steel
- better fire resistance than plastic plugs
- surface treatment: zinc plated, colored

Part No.	Model	s (mm)	Lh (mm)	$F_{a,z}$ (N)	$F_{a,x}$ (N)	Pack 1	Pack 2
6117153	Incl. screws (TF)	4.0	50	400	750	100	600
6117063	Without Screws	-	-	400	750	150	900
Max. allowed load in plaster block (safety margin 1:2).							

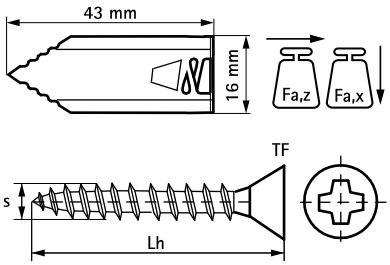

EN-SG 02/2022- Subject to modifications

BIS ARAYPLAST

(L 10 68)

fixing to concrete, brick



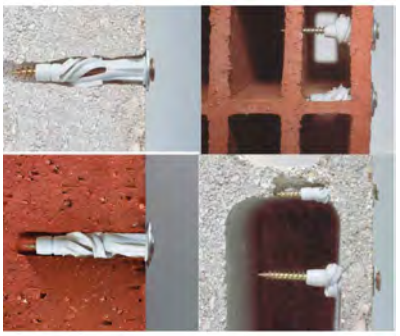

Features and Benefits

- for light duty fixings to e.g. brick (hollow or solid), block wall (hollow), etc.
- with collar to prevent plug from falling into hollow space
- material: PE (polyethylene)

Part No.	L	HØ (mm)	Pack 1	Pack 2
6118331	50 mm	8	40	800
6118371	50 mm	8	600	6,000
6118411	60 mm	10	15	150
6118461	60 mm	10	400	3,200

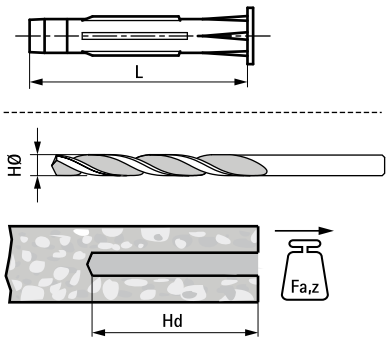

BIS Star Plug

(L 10 80)

fixing to aerated concrete, plaster block



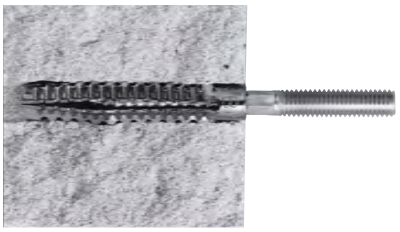

Features and Benefits

- for a fire safe fixing of pipes
- metal plug for wood and chipboard screws
- good grip because of external design (high pull-out resistance)
- insertion of hanger bolts is facilitated by the design of the internal shape (easy screw in)
- does not melt or burn with high temperature (important with gas pipes)
- dimension 6x32 mm and 8x38 mm can be hammered into low resistance aerated concrete without pre-drilling
- material: steel
- zinc plated, yellow passivated
- Part No. 6103860: zinc plated, blue passivated
- tested for fire safety
- tested according to DIN EN 1363-1: 1999-10

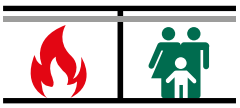

Part No.	L	s (mm)	HØ (mm)	Fa,z (N)	Pack 1	Pack 2
6103632	32 mm	6.0	7-8	60	100	500
6103838	38 mm	8.0	9-11	290	100	500
6103860	60 mm	8.0	9-11	490	100	500
6103960	60 mm	10.0	10-12	530	100	500

Max. allowed load ($F_{a,z}$) in aerated concrete (safety margin 1:3).
Exact drill hole diameter depends on the strength and the hardness of the building material.

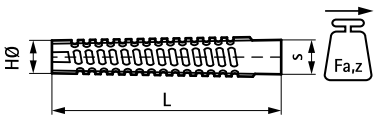

EN-SG 02/2022- Subject to modifications

BIS Hammer-in Shoulder Stud

(L 15 05)

fixing to wall or ceiling



Features and Benefits

- hammer-in instead of screw-in
- impact head to prevent head damage
- plug with shoulder
- material: hammer-in stud made of steel; plug made of PA (polyamide), grey
- zinc plated, passivated

Part No.	G	L	Lm1 (mm)	HØ (mm)	Pack 1	Pack 2
6373640	M6	40 mm	6.0	6	100	1,200
6373740	M7B	40 mm	6.0	6	100	1,200
6373750	M7B	50 mm	6.3	8	100	1,200
6373850	M8	50 mm	6.0	8	100	1,200
M7B: pitch = M7 x 1 mm.						

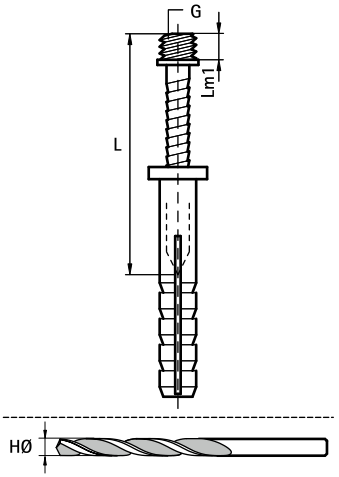

BIS Hammer-in Stud

(L 15 10)

fixing to wall or ceiling



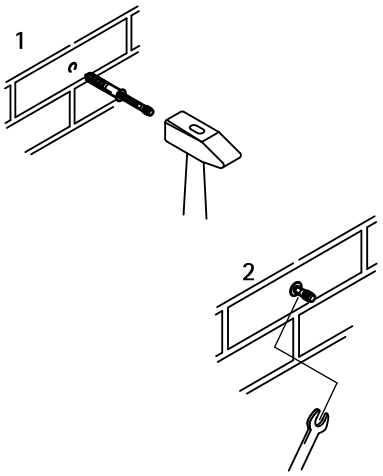

Features and Benefits

- impact head to prevent head damage
- with hexagon for fine setting
- plug with shoulder
- material: hammer-in stud made of steel; plug made of PA (polyamide), grey
- zinc plated

Part No.	G	L	Lm1 (mm)	Pack 1	Pack 2
6223808	M8	80 mm	14	100	500
6223810	M8	100 mm	34	100	500
6223812	M8	120 mm	34	100	500
6223815	M8	150 mm	50	100	500

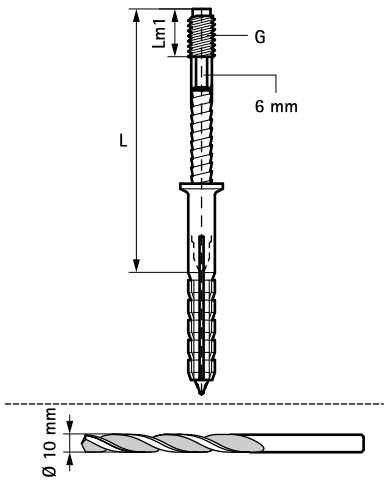

EN-SG 02/2022- Subject to modifications

BIS Nail Shoulder Stud

(L 15 20)

fixing to wall or ceiling



Features and Benefits

- material: tempered steel
- zinc plated

Part No.	G	L	Lm1 (mm)	HØ (mm)	Pack 1	Pack 2
6333618	M6	18 mm	8	4	100	3,000
6333625	M6	25 mm	8	4	100	3,000
6333630	M6	30 mm	8	4	100	2,000
6333640	M6	40 mm	8	4	100	2,000
6333655	M6	55 mm	8	4	100	1,800

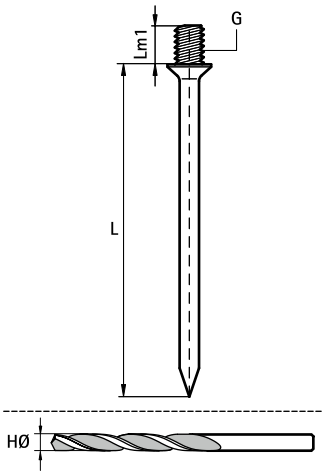

M BIS Stainless Steel Pipe Support Fixings



BIS Clamps with Lining

BIS Bifix® 1301 Stainless Steel (M8, M10) 518



BIS Clamps

BIS Bifix® 300 Stainless Steel (M8, M10) 519



BIS Industrial Clamps with Lining

Stainless Steel Heavy Duty Clamp with Lining (M12, M16) 520



BIS Industrial Clamps

Stainless Steel Heavy Duty Clamp (M12, M16) 521



BIS Suspension Band

BIS Stainless Steel Suspension Band 522



BIS Accessories for PVC Pipe Clamps

BIS Stainless Steel Expansion Joint Bracket 523



BIS Clamps for Plastic Pipe

BIS Bifix® 415 Stainless Steel 524
BIS 434 Stainless Steel Clamp for PE-Pipe 525



BIS Clamps with Lining for Spiral Ducts

BIS Clamp with Lining for Spiral Ducts (M8) 526



BIS Fixing Points and Sliding Devices

BIS Stainless Steel Fixpoint Console FPC 'Medium' 527
BIS Stainless Steel Expansion Device (M10) 528
BIS Stainless Steel Expansion Guide Assembly 529



BIS RapidRail® – Fixing Rail

BIS RapidRail® Stainless Steel Fixing Rail 530



BIS RapidRail® – Cantilever Arms

BIS RapidRail® Stainless Steel Cantilever Arm 531



BIS RapidRail® – Wall Plates

BIS RapidRail® Stainless Steel Wall Plate 532



BIS Rail Accessories for Pipe Fixing

BIS RapidRail® Stainless Steel Slide Nut 533
BIS Stainless Steel Slide Nut 534
BIS RapidRail® Stainless Steel Hammerfix 535
BIS Stainless Steel Washer (Flat) 536
BIS Stainless Steel Washer (Flat) 537
BIS Stainless Steel Washer (U-shaped) 538

M BIS Stainless Steel Pipe Support Fixings



BIS Rail Props

BIS Stainless Steel Rail Prop **539**



BIS Rail Connectors

BIS Stainless Steel Rail Connector **540**
BIS RapidRail® Stainless Steel Linear Connector **541**



BIS Rail Beam Clamps

BIS RapidRail® Stainless Steel Beam Clamp **542**



BIS RapidStrut® – Rail

BIS RapidStrut® Stainless Steel Fixing Rail **543**
BIS RapidStrut® Stainless Steel Fixing Rail Double **544**



BIS RapidStrut® – Cantilever Arms

BIS RapidStrut® Stainless Steel Cantilever Arm **545**



BIS RapidStrut® – Base Plates

BIS RapidStrut® Stainless Steel Base Plate G2 **546**



BIS RapidStrut® – Rail Accessories for Pipe Fixing

BIS RapidStrut® Stainless Steel Slide Nut G2 **547**
BIS RapidStrut® Stainless Steel Slide Nut with Tabs **548**



BIS Strut Wall Plates

BIS Strut Stainless Steel T-shape Base Plate **549**
BIS Strut Stainless Steel Wall Plate (Hinged) **550**
BIS Strut Stainless Steel Adjustable Support **551**



BIS Strut Rail Accessories for Pipe Fixing

BIS Strut Stainless Steel Slide Nut **552**
BIS Strut Stainless Steel Square Slide Nut **553**
BIS Strut Stainless Steel Tee-Bolt **554**
BIS Strut Stainless Steel Washer (Flat) **555**
BIS Strut Stainless Steel Washer (U-shaped) **556**



BIS Strut Connectors

BIS Strut Stainless Steel Connector 90° Rigid **557**
BIS Strut Stainless Steel Angle Connector 90° **558**
BIS Strut Stainless Steel Angle Connector 135° **559**
BIS Strut Stainless Steel Connector 90° / 2D **560**
BIS Strut Stainless Steel Cross Connector **561**
BIS Strut Stainless Steel T-Connector **562**
BIS Strut Stainless Steel U-Connector **563**
BIS Strut Stainless Steel Z-Connector **564**



BIS Strut Beam Clamps

BIS Strut Stainless Steel Beam Clamp **565**
BIS Strut Stainless Steel Beam Clamp **566**
BIS Stainless Steel Beam Clamp Model O V2A **567**



BIS Wall Plates

BIS Stainless Steel Wall Plate Resistance Welded **568**
BIS Stainless Steel Wall Plate CO_2 Welded **569**
BIS Stainless Steel Wall Plate with Welded Stud Bolt 672 **570**

EN-SG 02/2022- Subject to modifications

M BIS Stainless Steel Pipe Support Fixings



BIS Roofing Sheet Hangers

BIS Stainless Steel Roofing Sheet Hanger 571



BIS Hanger Bolts

BIS Stainless Steel Hanger Bolt 572



BIS Screws, Bolts, Nuts

BIS Stainless Steel Hexagon Head Screw 573
BIS Stainless Steel Hexagon Nut 574



BIS Chains, S-Hooks

BIS Stainless Steel Chain (DIN 5685-1) 575



BIS Threaded Rods, Thread Connectors

BIS Stainless Steel Stud Bolt 576
BIS Stainless Steel Threaded Rod 577
BIS Stainless Steel Stud Connector 578
BIS Stainless Steel Stud Connector 579
BIS Stainless Steel Thread Adaptor 580



BIS Fastenings

WDI1 Drop-in Anchor SSt 581
WTB1 Throughbolt Anchor SSt 582
WIS Threaded Rod SSt 583

EN-SG 02/2022- Subject to modifications

BIS Bifix® 1301 Stainless Steel

(M 05 05)

for stainless steel pipes Ø 11 - 250 mm

M8 - M10



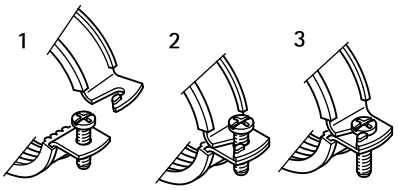

Features and Benefits

- two-screw clamp
- with quick locking system
- material: stainless steel 1.4404 (AISI 316L)
- sound insulating lining according DIN 4109
- noise insulating lining, EPDM rubber, black
- age resistant lining

Part No.	D (mm)	D (")	DN	G	B (mm)	H (mm)	h (mm)	b x s (mm)	$F_{a,z}$ (N)	Pack 1
3117015	11 - 14	¼	8	M8	58	33	20	20 x 1.25	900	50
3117018	15 - 19	⅜	10	M8	64	39	23	20 x 1.25	900	50
3117023	20 - 23	½	15	M8	67	42	24	20 x 1.25	900	50
3117029	25 - 28	¾	20	M8	72	47	27	20 x 1.25	900	50
3117035	31 - 35	1	25	M8	80	55	31	20 x 1.25	900	50
3117043	40 - 43	1¼	32	M8	87	62	35	20 x 1.25	900	50
3117049	47 - 51	1½	40	M8	96	71	39	20 x 1.25	900	50
3117056	52 - 56	-	-	M8	100	75	41	20 x 1.25	900	50
3117063	57 - 64	2	50	M8	108	83	45	20 x 1.25	900	50
3117067	64 - 67	-	-	M8	109	87	46	20 x 2.00	1,350	25
3117076	70 - 76	2½	65	M8	118	96	51	20 x 2.00	1,350	25
3117091	86 - 91	3	80	M8	130	108	57	20 x 2.00	1,350	25
3117106	100 - 106	-	-	M8	154	132	69	20 x 2.00	1,350	25
3117116	108 - 116	4	100	M8	158	136	71	20 x 2.50	1,710	25
3127018	15 - 19	⅜	10	M10	62	38	23	20 x 1.25	900	50
3127023	20 - 23	½	15	M10	64	43	25	20 x 1.25	900	50
3127029	25 - 28	¾	20	M10	70	47	27	20 x 1.25	900	50
3127035	31 - 35	1	25	M10	78	55	31	20 x 1.25	900	50
3127043	40 - 43	1¼	32	M10	85	63	35	20 x 1.25	900	50
3127049	47 - 51	1½	40	M10	97	72	39	20 x 1.25	900	50
3127056	52 - 56	-	-	M10	97	75	41	20 x 1.25	900	50
3127063	57 - 64	2	50	M10	102	82	44	20 x 1.25	900	50
3127067	64 - 67	-	-	M10	109	89	48	20 x 2.00	1,350	25
3127076	70 - 76	2½	65	M10	118	98	52	20 x 2.00	1,350	25
3127085	79 - 85	-	-	M10	124	104	55	20 x 2.00	1,350	25
3127091	86 - 91	3	80	M10	130	109	58	20 x 2.00	1,350	25
3127106	100 - 106	-	-	M10	154	135	72	20 x 2.00	1,350	25
3127116	108 - 116	4	100	M10	158	137	72	20 x 2.50	1,710	25
3127132	124 - 132	-	-	M10	170	149	78	20 x 2.50	1,710	25
3127141	133 - 141	5	125	M10	179	159	83	20 x 2.50	1,710	25
3127168	159 - 168	6	150	M10	233	195	101	25 x 2.50	1,710	15
3127210	200 - 210	-	-	M10	273	235	120	25 x 2.50	1,710	15
3127219	210 - 219	8	200	M10	285	247	126	25 x 2.50	1,710	10
3127225	219 - 225	-	-	M10	284	247	126	25 x 2.50	1,710	10
3127250	244 - 250	-	-	M10	317	279	142	25 x 2.50	1,710	10

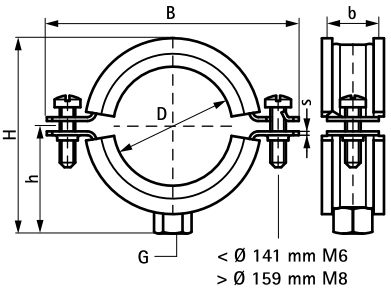

Complementary

530 BIS RapidRail® Stainless Steel Fixing Rail
543 BIS RapidStrut® Stainless Steel Fixing Rail
572 BIS Stainless Steel Hanger Bolt

EN-SG 02/2022- Subject to modifications

BIS Bifix® 300 Stainless Steel

(M 10 05)

for stainless steel pipes Ø 15 - 219 mm

M8 - M10



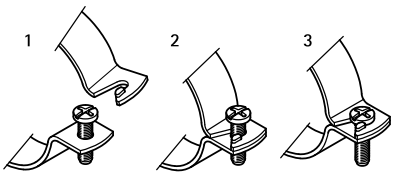

Features and Benefits

- two-screw clamp
- with quick locking system
- material: stainless steel 1.4404 (AISI 316L)

RAL GÜTEZEICHEN ROHRBEFESTIGUNG
RAL-GZ 655/B
Cert.Nr. 2004-09

Part No.	D (mm)	D (")	DN	G	B (mm)	H (mm)	h (mm)	b x s (mm)	$F_{a,z}$ (N)	RAL	Pack 1
3017017	15 - 19	3/8	10	M8	56	31	19	20 x 1.25	1,000	-	50
3017022	20 - 22	1/2	15	M8	58	33	20	20 x 1.25	1,000	-	50
3017030	25 - 28	3/4	20	M8	64	39	23	20 x 1.25	1,000	-	50
3017034	31 - 35	1	25	M8	72	47	27	20 x 1.25	1,000	-	50
3017042	40 - 43	1 1/4	32	M8	80	54	31	20 x 1.25	1,000	-	50
3017051	47 - 51	1 1/2	40	M8	87	62	35	20 x 1.25	1,000	-	50
3017060	54 - 60	-	-	M8	96	71	39	20 x 1.25	1,000	-	50
3017076	72 - 76		-	M8	109	86	46	20 x 2.00	1,500	RAL[1]	25
3017089	85 - 89	3	80	M8	124	101	54	20 x 2.00	1,500	RAL[1]	25
3017118	110 - 118	4	100	M8	154	131	69	20 x 2.50	1,900	RAL[1]	25
3027068	62 - 68	-	-	M10	102	80	44	20 x 2.00	1,500	RAL[1]	50
3027076	72 - 76	-	-	M10	109	87	48	20 x 2.00	1,500	RAL[1]	25
3027085	79 - 85	-	-	M10	118	96	52	20 x 2.00	1,500	RAL[1]	25
3027089	85 - 89	3	80	M10	124	102	55	20 x 2.00	1,500	RAL[1]	25
3027105	100 - 105	-	-	M10	139	117	62	20 x 2.00	1,500	RAL[1]	25
3027111	106 - 111	-	-	M10	146	124	66	20 x 2.50	1,900	RAL[1]	25
3027118	110 - 118	4	100	M10	154	132	70	20 x 2.50	1,900	RAL[1]	25
3027127	122 - 127	-	-	M10	163	140	74	20 x 2.50	1,900	RAL[1]	25
3027134	129 - 134	-	-	M10	170	148	78	20 x 2.50	1,900	RAL[1]	25
3027144	139 - 144	5	125	M10	179	157	83	20 x 2.50	1,900	RAL[1]	25
3027155	150 - 155	-	-	M10	192	172	91	20 x 2.50	1,900	RAL[1]	25
3027162	157 - 162	-	-	M10	196	174	91	20 x 2.50	1,900	RAL[1]	25
3027169	164 - 169	6	150	M10	203	181	95	20 x 2.50	1,900	RAL[1]	25
3027200	193 - 200	-	-	M10	256	216	112	25 x 2.50	1,900	RAL[1]	15
3027219	212 - 219	8	200	M10	273	233	121	25 x 2.50	1,900	RAL[1]	15

RAL[1] = tested, certified and monitored by a third party according to RAL-GZ 655/B.
For detailed technical information about our RAL marked products, please see the RAL datasheet in our web catalogue.

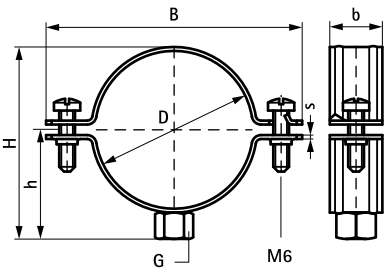

Complementary

530 BIS RapidRail® Stainless Steel Fixing Rail
543 BIS RapidStrut® Stainless Steel Fixing Rail
572 BIS Stainless Steel Hanger Bolt

Alternative

518 BIS Bifix® 1301 Stainless Steel

Stainless Steel Heavy Duty Clamp with Lining

(M 11 05)

72 - 325 mm

M12 - M16



Features and Benefits

- two-part clamp with two locking bolts
- heavy design
- with CO_2 welded connection nut
- material: stainless steel 1.4401 (A4) - EN 10088, AISI 316
- noise insulating lining, EPDM rubber, black
- also available on request: sound insulating lining of silicone rubber (reddish brown), heat resistant up to +200 °C (A 35 15)
- with sound insulating lining (acc. DIN 4109), age resistant, for temperatures -30 °C up to +110 °C

Part No.	D (mm)	D (")	DN	G	B (mm)	H (mm)	h (mm)	b x s (mm)	cs	$F_{a,z}$ (N)	Pack 1
33177078	72 - 78	2½	65	M12	141	111	66	25 x 3.0	M10 x 30 mm	1,900	5
33177085	79 - 85	-	-	M12	148	118	69	25 x 3.0	M10 x 30 mm	1,900	5
33177092	86 - 92	3	80	M12	155	125	77	25 x 3.0	M10 x 30 mm	1,900	5
33177109	101 - 109	-	-	M12	184	144	82	30 x 4.0	M10 x 40 mm	2,400	5
33177116	108 - 116	4	100	M12	191	151	85	30 x 4.0	M10 x 40 mm	2,400	5
33177133	125 - 133	-	-	M12	208	168	94	30 x 4.0	M10 x 40 mm	2,400	5
33177140	132 - 140	5	125	M12	217	177	99	30 x 4.0	M10 x 40 mm	2,400	5
33177169	159 - 169	6	150	M12	271	211	116	40 x 4.0	M12 x 50 mm	3,800	5
33177188	178 - 188	-	-	M12	290	230	125	40 x 4.0	M12 x 50 mm	3,800	5
33177204	194 - 204	-	-	M12	307	247	134	40 x 4.0	M12 x 50 mm	3,800	5
33177213	203 - 213	-	-	M12	315	255	138	40 x 4.0	M12 x 50 mm	3,800	5
33177227	217 - 227	8	200	M12	329	269	145	40 x 4.0	M12 x 50 mm	3,800	5
33177250	240 - 250	-	-	M16	352	298	161	40 x 4.0	M12 x 50 mm	3,800	5
33177275	265 - 275	10	250	M16	377	323	174	40 x 4.0	M12 x 50 mm	3,800	5
33177325	315 - 325	12	300	M16	429	375	200	40 x 4.0	M12 x 50 mm	3,800	5

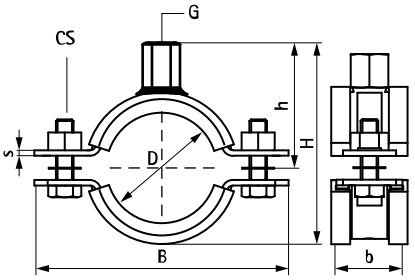

Complementary

527 BIS Stainless Steel Fixpoint Console FPC 'Medium'
529 BIS Stainless Steel Expansion Guide Assembly
577 BIS Stainless Steel Threaded Rod

Complementary

569 BIS Stainless Steel Wall Plate Resistance Welded
543 BIS RapidStrut® Stainless Steel Fixing Rail
544 BIS RapidStrut® Stainless Steel Fixing Rail Double

EN-SG 02/2022- Subject to modifications

Stainless Steel Heavy Duty Clamp

(M 12 02)

72 - 341 mm

M12 - M16



Features and Benefits

- two-part clamp with two locking bolts
- heavy design
- with CO_2 welded connection nut
- material: stainless steel 1.4401 (A4) - EN 10088, AISI 316

Part No.	D (mm)	D (")	DN	G	B (mm)	H (mm)	h (mm)	b x s (mm)	cs	$F_{a,z}$ (N)	Pack 1
33077078	72 - 78	2½	65	M12	134	102	62	25 x 3.0	M10 x 30 mm	2,200	5
33077085	79 - 85	-	-	M12	141	109	66	25 x 3.0	M10 x 30 mm	2,200	5
33077092	86 - 92	3	80	M12	148	116	69	25 x 3.0	M10 x 30 mm	2,200	5
33077099	93 - 99	-	-	M12	155	123	72	25 x 3.0	M10 x 30 mm	2,200	5
33077106	98 - 106	-	-	M12	174	132	77	30 x 4.0	M10 x 40 mm	4,100	5
33077116	108 - 116	4	100	M12	184	142	82	30 x 4.0	M10 x 40 mm	4,100	5
33077123	115 - 123	-	-	M12	191	149	85	30 x 4.0	M10 x 40 mm	4,100	5
33077133	125 - 133	-	-	M12	201	159	91	30 x 4.0	M10 x 40 mm	4,100	5
33077140	132 - 140	5	125	M12	208	166	94	30 x 4.0	M10 x 40 mm	4,100	5
33077149	139 - 149	-	-	M12	217	175	99	30 x 4.0	M10 x 40 mm	4,100	5
33077169	159 - 169	6	150	M12	257	195	109	40 x 4.0	M12 x 50 mm	4,900	5
33077183	173 - 183	-	-	M12	271	209	116	40 x 4.0	M12 x 50 mm	4,900	5
33077202	192 - 202	-	-	M12	290	228	125	40 x 4.0	M12 x 50 mm	4,900	5
33077219	208 - 219	-	-	M12	307	245	134	40 x 4.0	M12 x 50 mm	4,900	5
33077227	217 - 227	8	200	M12	315	253	138	40 x 4.0	M12 x 50 mm	4,900	5
33077241	229 - 241	-	-	M12	329	267	145	40 x 4.0	M12 x 50 mm	4,900	5
33077250	240 - 250	-	-	M16	338	282	154	40 x 4.0	M12 x 50 mm	4,900	5
33077264	254 - 264	-	-	M16	352	296	161	40 x 4.0	M12 x 50 mm	4,900	5
33077275	265 - 275	10	250	M16	363	307	167	40 x 4.0	M12 x 50 mm	4,900	5
33077289	279 - 289	-	-	M16	377	321	174	40 x 4.0	M12 x 50 mm	4,900	5
33077325	315 - 325	12	300	M16	415	359	192	40 x 4.0	M12 x 50 mm	4,900	5
33077341	329 - 341	-	-	M16	429	373	200	40 x 4.0	M12 x 50 mm	4,900	5

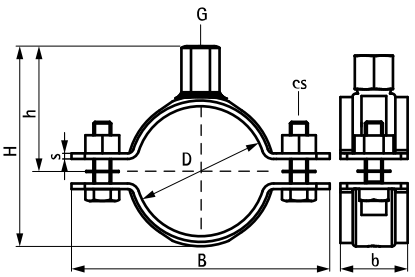

Complementary

527 BIS Stainless Steel Fixpoint Console FPC 'Medium'

529 BIS Stainless Steel Expansion Guide Assembly

543 BIS RapidStrut® Stainless Steel Fixing Rail

Complementary

544 BIS RapidStrut® Stainless Steel Fixing Rail Double

577 BIS Stainless Steel Threaded Rod

569 BIS Stainless Steel Wall Plate Resistance Welded

EN-SG 02/2022- Subject to modifications

BIS Stainless Steel Suspension Band

(M 13 05)

for vertical PVC downpipes, parallel conducts and suspended installations, etc.



Features and Benefits

- flexible system with multiple applications
- dispenser cassette allows easy handling and storage
- material: stainless steel 1.4401 (AISI 316)

Part No.	L	b x s (mm)	d1 (mm)	k (mm)	$F_{a,z}$ (N)	Pack 1	App.
0833012	10 m	12 x 0.8	5.0	14.0	1,160	10	roll
0833017	10 m	17 x 0.8	7.0	20.0	1,560	10	roll
0833026	10 m	26 x 1.0	8.0	25.0	3,690	10	roll

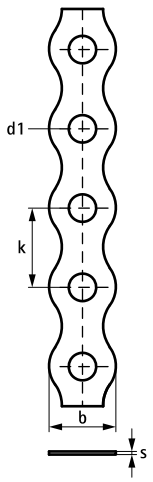

EN-SG 02/2022- Subject to modifications

BIS Stainless Steel Expansion Joint Bracket

(M 14 10)

accessories BIS PVC pipe clamps



Features and Benefits

- for fixing of rain water pipe over expansion joints
- with 'claws' which grip on to the band
- material: connection bracket made of stainless steel 1.4404 (AISI 316L); connector made of PC (polycarbonate), grey

Part No.	Model	L	B (mm)	H (mm)	h (mm)	s (mm)	d1 (mm)	d2 (mm)	k (mm)	Colour	Pack 1
1487000	Stainless steel with threaded connector	25 mm	104	36	25	3	15 x 6	-	80	Grey (RAL 7035)	50
1487010	Stainless steel	25 mm	104	10	-	3	15 x 6	6.5	80	-	200

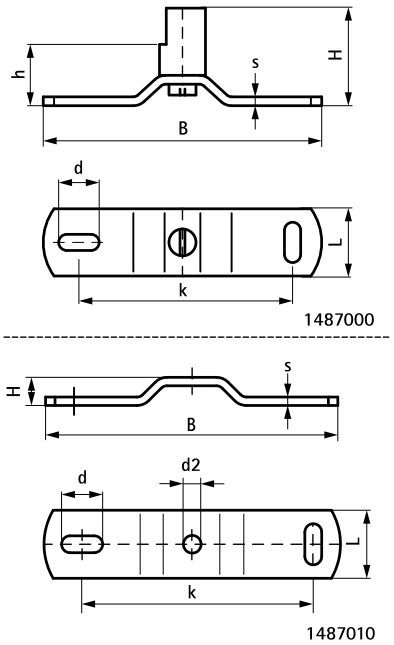

BIS Bifix® 415 Stainless Steel

(M 15 05)

for plastic pipes Ø 32 - 200 mm

M8



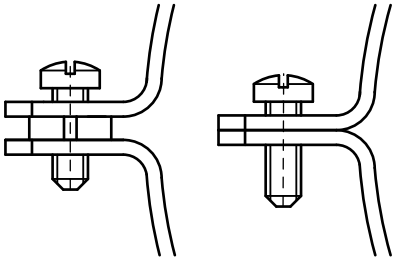

Features and Benefits

- two-screw clamp
- with quick locking system
- with removable spacer washers, making the clamp suitable for either sliding or anchoring
- inside profile to protect pipes from damage
- material: stainless steel 1.4404 (AISI 316L)

Part No.	D (mm)	DN	G	B (mm)	H (mm)	h (mm)	b x s (mm)	$F_{a,z}$ (N)	Pack 1
4157032	32	25	M8	71	53	32	20 x 1.5	1,310	25
4157040	40	32	M8	85	61	36	20 x 1.5	1,310	25
4157050	50	40	M8	96	63	40	20 x 1.5	1,310	25
4157070	70	-	M8	109	89	50	20 x 1.5	1,310	25
4157075	75	70	M8	114	94	54	20 x 1.5	1,310	25
4157080	80	-	M8	119	101	56	20 x 1.5	1,310	25
4157090	90	80	M8	129	109	61	20 x 1.5	1,310	25
4157100	100	-	M8	139	119	66	20 x 1.5	1,310	25
4157110	110	100	M8	149	129	71	20 x 1.5	1,310	25
4157125	125	125	M8	164	145	80	20 x 1.5	1,310	25
4157160	160	150	M8	208	180	96	20 x 1.5	1,310	25
4157200	200	200	M8	247	221	117	20 x 1.5	1,310	25

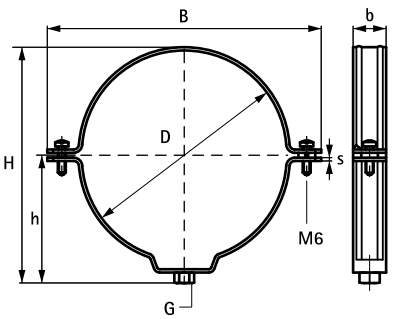

Complementary

572 BIS Stainless Steel Hanger Bolt

EN-SG 02/2022- Subject to modifications

BIS 434 Stainless Steel Clamp for PE-Pipe

(M 15 10)

for plastic pipes Ø 32 - 200 mm

M10



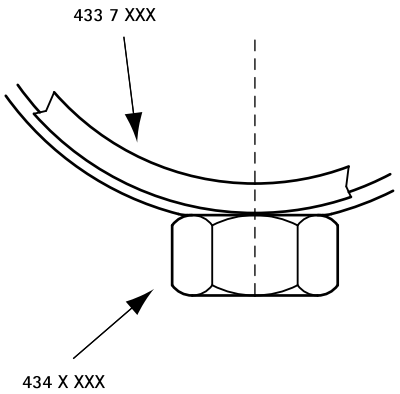

Features and Benefits

- two-screw clamp
- for rigid fixing point fastening it is necessary to use metal clamp liners (Part No. 4337XXX)
- screws secured with anti-loss washer
- material: stainless steel 1.4401 (AISI 316)

Part No.	D (mm)	DN	G	B (mm)	H (mm)	h (mm)	b x s (mm)	$F_{a,z}$ (N)	Pack 1
4347032	32	25	M10	75	50	30	30 x 3.0	4,160	50
4347040	40	32	M10	82	58	34	30 x 3.0	4,160	50
4347050	50	40	M10	92	69	39	30 x 3.0	4,160	50
4347056	56	50	M10	98	74	42	30 x 3.0	4,160	50
4347063	63	57	M10	105	81	45	30 x 3.0	4,160	50
4347075	75	70	M10	117	94	51	30 x 3.0	4,160	25
4347090	90	80	M10	132	108	59	30 x 3.0	4,160	25
4347110	110	100	M10	152	128	69	30 x 3.0	4,160	25
4347125	125	125	M10	167	143	76	30 x 3.0	4,160	25
4347160	160	150	M10	202	178	92	30 x 3.0	4,160	25
4347200	200	200	M10	278	218	112	30 x 3.0	4,160	10
4387200	200	200	G1"	278	251	147	30 x 3.0	3,180	25
4387250	250	250	G1"	330	301	172	30 x 3.0	3,180	10
4387315	315	315	G1"	393	363	202	30 x 3.0	3,180	10

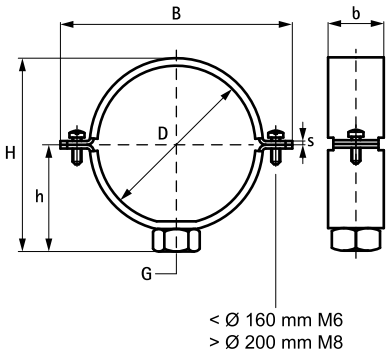

Complementary

568 BIS Stainless Steel Wall Plate Resistance Welded
572 BIS Stainless Steel Hanger Bolt
65 BIS Metal Liner 434 Clamp

Complementary

66 BIS Lining 434 Clamp

BIS Clamp with Lining for Spiral Ducts (M8)

(M 16 05)

for spiral ducts Ø 100 - 400 mm

M8



Features and Benefits

- two-part clamp with two locking bolts
- with quick locking system
- material: stainless steel 1.4404 (AISI 316L)
- noise insulating lining, EPDM rubber, black
- sound insulating lining according DIN 4109

Part No.	D (mm)	G	B (mm)	H (mm)	h (mm)	b x s (mm)	$F_{a,z}$ (N)	Pack 1
4137080	80	M8	127	97	52	25 x 1.5	850	25
4137100	100	M8	147	117	63	25 x 1.5	850	25
4137125	125	M8	172	142	74	25 x 1.5	850	25
4137150	150	M8	197	167	87	25 x 1.5	850	25
4137160	160	M8	207	178	92	25 x 1.5	850	25
4137200	200	M8	247	217	112	25 x 1.5	850	25
4137225	225	M8	272	243	124	25 x 1.5	850	25
4137250	250	M8	297	267	136	25 x 1.5	850	25
4137300	300	M8	347	317	162	25 x 1.5	850	25
4137315	315	M8	361	332	169	25 x 1.5	850	25
4137355	355	M8	402	372	189	25 x 1.5	850	25
4137400	400	M8	446	417	212	25 x 1.5	850	25
4137560	560	-	625	586	293	25 x 2.5	850	3
4137600	600	-	654	634	317	25 x 2.5	850	3
4137630	630	-	695	656	328	25 x 2.5	850	3

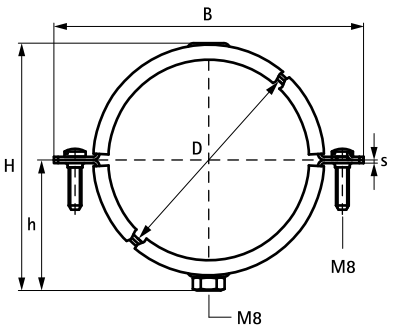

EN-SG 02/2022- Subject to modifications

BIS Stainless Steel Fixpoint Console FPC 'Medium'

(M 19 02)





Features and Benefits

- flexible use console module for high forces (depending on the situation, detailed design by technical service)
- can be used as a pipe connection point in conjunction with 2 or 3 heavy-duty clamps type Stainless Steel Heavy Duty Clamps and Stainless Steel Heavy Duty Clamps with Lining
- tightening torque 75 Nm for the console fixing screws
- material: metal parts made of stainless steel 1.4404 (A4) - EN 10088, AISI 316L; bolts, nuts, washers made of stainless steel 1.4401 (A4) - EN 10088, AISI 316

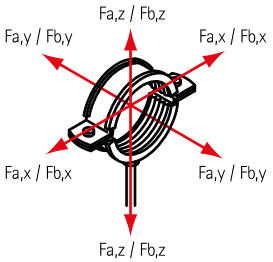

Part No.	L	B (mm)	H (mm)	h (mm)	d1 (mm)	d2 (mm)	k (mm)	k1 (mm)	$F_{a,z}$ (N)	$F_{a,y}$ (N)	$F_{a,x}$ (N)	Pack 1	
6697206	80 mm	136	153 - 268	150	15 x 11	Ø 13.0	100	90	14,300	11,500	3,200	1	*

** Depending on the situation, please contact Walraven Technical Support for advice on safe loads. Note! Console, Clamps and Anchors are to be ordered separately.*

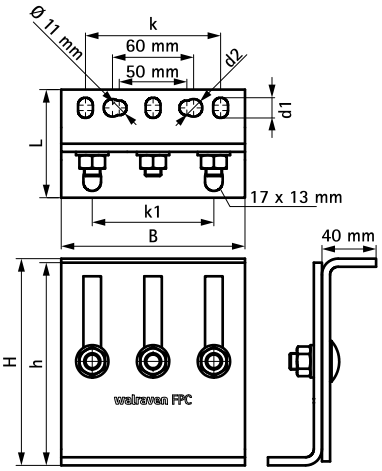

Complementary

519 BIS Bifix® 300 Stainless Steel
518 BIS Bifix® 1301 Stainless Steel
520 Stainless Steel Heavy Duty Clamp with Lining

Complementary

521 Stainless Steel Heavy Duty Clamp
478 WTB1 Throughbolt Anchor

BIS Stainless Steel Expansion Device (M10)

(M 19 05)

single expansion device for pipe extensions





Features and Benefits

- single bracket for pipe extensions
- suitable for ceiling mounting (suspended) and floor mounting (standing mounted)
- fix in combination with RapidStrut Rails and Cantilever arms or directly on the building structure
- can be combined with stainless steel pipe clamps M10
- metal parts made of stainless steel 1.4404; plastic parts made of PA (polyamide)
- friction coefficient μ = 0.18; Sliding friction coefficient μ = 0.14
- temperature resistance up to +120 °C

Part No.	Model	G	B (mm)	H (mm)	d1 (mm)	k (mm)	SL (max.) (mm)	$F_{a,z}$ (N)	$F_{a,z\,2}$ (N)	Pack 1
6667410	Single	M10	150	46	20 x 12.5	100	80	2,300	2,300	10
$F_{a,z}$ = standing mounted; $F_{a,z\,2}$ = suspended.										

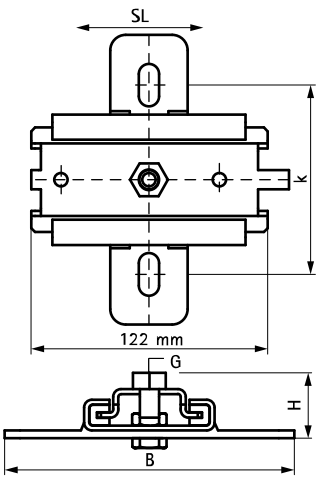

Complementary

518 BIS Bifix® 1301 Stainless Steel
543 BIS RapidStrut® Stainless Steel Fixing Rail
531 BIS RapidRail® Stainless Steel Cantilever Arm

Complementary

548 BIS RapidStrut® Stainless Steel Slide Nut with Tabs
554 BIS Strut Stainless Steel Tee-Bolt
573 BIS Stainless Steel Hexagon Head Screw

Alternative

124 BIS Slide Block GFRP (BUP1000)

EN-SG 02/2022- Subject to modifications

BIS Stainless Steel Expansion Guide Assembly

(M 19 10)

fixing with sliding assemblies





Features and Benefits

- stable and safe double support for pipe expansion
- fix directly on the building structure or in combination with rail systems
- suitable for ceiling mounting (suspended) and floor mounting (standing mounted)
- tapped with different sized connecting holes (13/17 mm) on opposing faces
- can be combined with HD1501 or HD500 clamps
- material: metal parts made of stainless steel 1.4404 (A4) - EN 10088, AISI 316; sliding strips made of PE colour white, endcaps made of PE colour black

Part No.	Type	G	L	B (mm)	H (mm)	b (mm)	s (mm)	d1 (mm)	k (mm)	k1 (mm)	SL (max.) (mm)	$F_{a,z}$ (N)	$F_{a,z}$ (kg)	Pack 1
6667813	FG3	Ø 13.0 mm / 17.0 mm	255 mm	146	90	40	5.0	20 x 13	200	100	120	7,500	750	5

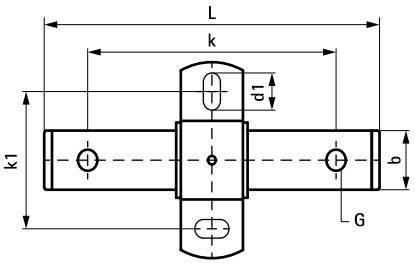

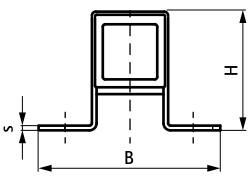

Complementary

519 BIS Bifix® 300 Stainless Steel
518 BIS Bifix® 1301 Stainless Steel
520 Stainless Steel Heavy Duty Clamp with Lining

Complementary

521 Stainless Steel Heavy Duty Clamp
582 WTB1 Throughbolt Anchor SSt

EN-SG 02/2022- Subject to modifications

BIS RapidRail® Stainless Steel Fixing Rail

(M 20 05)

suspension and support



6507001 6507015 6507002

Features and Benefits

- C-profile
- for a quick and easy fixing
- with continuous perforation
- distance between rail end and first hole is always equal
- a continuous graduated centimetre scale on one side
- material: stainless steel 1.4404 (AISI 316L)

RAL GÜTEZEICHEN ROHRBEFESTIGUNG
RAL-GZ 655/C
Cert.Nr. 2012-07

Part No.	Type	L	B (mm)	H (mm)	s (mm)	S (mm)	RAL	BndS	BndL
6507001	WM1	2 m	30	15	2.00	15	-	20	480
6507015	WM15	2 m	30	20	1.75	15	-	20	480
6507002	WM2	2 m	30	30	2.00	15	RAL[1]	20	400

RAL[1] = tested, certified and monitored by a third party according to RAL-GZ 655/C.
For detailed technical information about our RAL marked products, please see the RAL datasheet in our web catalogue.
For more information about the max. allowed load ($F_{a,z}$) please refer to the loading tables or our online datasheet 'Technical Details BIS RapidRail®'.

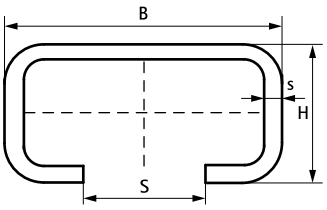

WM1

Complementary

533 BIS RapidRail® Stainless Steel Slide Nut
535 BIS RapidRail® Stainless Steel Hammerfix

EN-SG 02/2022- Subject to modifications

BIS RapidRail® Stainless Steel Cantilever Arm

(M 25 05)

fixing to wall or ceiling



6607120 6607230 6607250

Features and Benefits

- wall plate with welded C-profile
- slots at 90° to each other to simplify fixing
- CO_2 welded
- material: stainless steel 1.4404 (AISI 316L)

Part No.	L	B (mm)	H (mm)	s1 (mm)	d1 (mm)	S (mm)	k (mm)	From Rail	Pack 1
6607120	200 mm	48	110	5.0	25 x 11	15	70	WM1 - 30x15	20
6607230	300 mm	48	110	5.0	25 x 11	15	70	WM2 - 30x30	10
6607250	500 mm	48	110	5.0	25 x 11	15	70	WM2 - 30x30	20

For more information about the max. allowed load ($F_{a,z}$) please refer to the loading tables or our online datasheet 'Technical Details BIS RapidRail®'.

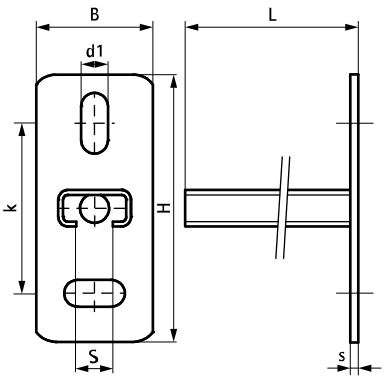

Complementary

539 BIS Stainless Steel Rail Prop
533 BIS RapidRail® Stainless Steel Slide Nut
535 BIS RapidRail® Stainless Steel Hammerfix

EN-SG 02/2022- Subject to modifications

BIS RapidRail® Stainless Steel Wall Plate

(M 27 10)

fixing to wall, floor or ceiling



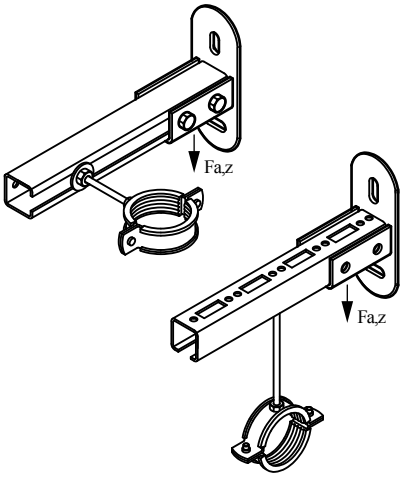

Features and Benefits

- flexible base plate for rails
- for fixing to wall, floor or ceiling
- rail can be fixed with slot downwards or sideways
- suitable for rail WM1, 15, 2
- with pre-assembled BIS RapidRail® Sliding nut(s) for a quick fixing, and retains assembly in place before final tightening
- material: stainless steel 1.4401/1.4404 (A4) - EN10088, AISI 316/316L; spring(s) made of of POM (polyoxymethylene), blue (according to RAL 5015)

Part No.	L	B (mm)	H (mm)	s (mm)	d1 (mm)	k (mm)	SW1 (mm)	$T_{(max.)}$ (Nm)	$F_{a,z}$ (N)	Pack 1
6617210	100 mm	50	123	4.0	25 x 11	83	13	15.0	2,850	25

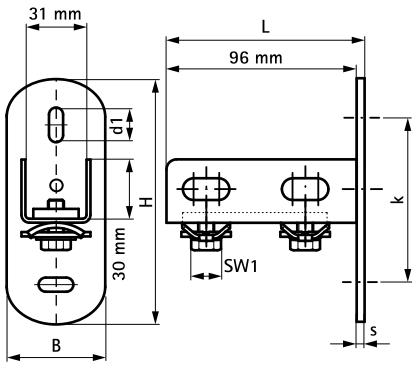

Complementary

530 BIS RapidRail® Stainless Steel Fixing Rail
582 WTB1 Throughbolt Anchor SSt
581 WDI1 Drop-in Anchor SSt

EN-SG 02/2022- Subject to modifications

BIS RapidRail® Stainless Steel Slide Nut

(M 29 05)

fixing to BIS RapidRail®



Features and Benefits

- slide nut with washer and BIS RapidRail® spring
- ready-to-use pre-assembled for a quick fixing, and retains assembly in place before final tightening
- material: metal parts made of stainless steel 1.4401 (AISI 316); spring(s) made of POM (polyoxymethylene), blue

Part No.	G	b x s (mm)	$T_{(max.)}$ (Nm)	For Rail	$F_{a,z}$ (N)	Pack 1	Pack 2
6517306	M6	13.5 x 4.0	7.5	WM1, 15, 2	2,000	50	500
6517308	M8	13.5 x 5.0	15.0	WM1, 15, 2	2,700	50	500
6517310	M10	14.0 x 5.0	15.0	WM1, 15, 2	2,900	50	500

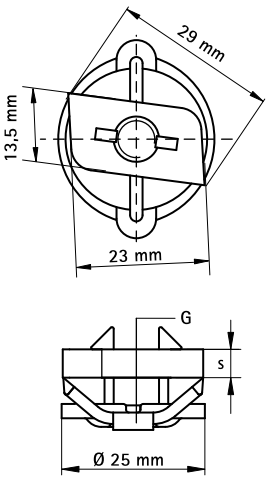

Complementary

530 BIS RapidRail® Stainless Steel Fixing Rail
531 BIS RapidRail® Stainless Steel Cantilever Arm

Alternative

535 BIS RapidRail® Stainless Steel Hammerfix

EN-SG 02/2022- Subject to modifications

BIS Stainless Steel Slide Nut

(M 29 10)

fixing to BIS RapidRail®

A



B



C



Features and Benefits

- because of shape the nut fits in rail
- material: stainless steel 1.4401 (AISI 316)

	Part No.	G	b (mm)	s (mm)	$T_{(max.)}$ (Nm)	For Rail	Pack 1	Pack 2
A	6511006	M6	25.0	5.0	7.5	WM1, 15, 2	50	250
B	6511008	M8	13.5	5.0	15.0	WM1, 15, 2	50	1,000
C	6511010	M10	14.0	5.0	15.0	WM1, 15, 2	50	1,000
A	6511012	M12	25.0	5.0	30.0	WM1, 15, 2	50	500

A

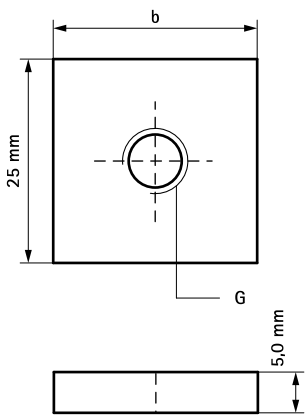

B

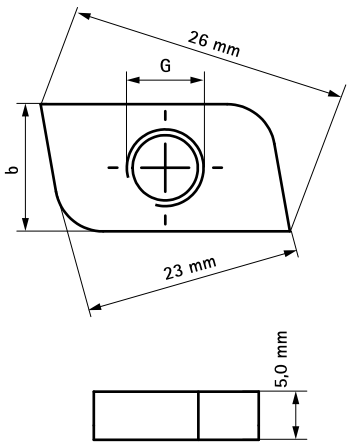

Complementary

530 BIS RapidRail® Stainless Steel Fixing Rail
531 BIS RapidRail® Stainless Steel Cantilever Arm

Alternative

533 BIS RapidRail® Stainless Steel Slide Nut

EN-SG 02/2022- Subject to modifications

BIS RapidRail® Stainless Steel Hammerfix

(M 29 25)

fixing to BIS RapidRail®



Features and Benefits

- slide nut with stud bolt, washer and BIS RapidRail® spring
- ready-to-use pre-assembled for a quick fixing, and retains assembly in place before final tightening
- material: metal parts made of stainless steel 1.4401 (AISI 316); spring(s) made of POM (polyoxymethylene), blue

Part No.	G	L	LU (mm)	b x s (mm)	SW1 (mm)	$T_{(max.)}$ (Nm)	For Rail	$F_{a,z}$ (N)	Pack 1	Pack 2
6527062	M6	25 mm	11	13.5 x 4.0	10	7.5	WM1, 15, 2	2,000	25	250
6527084	M8	40 mm	25	13.5 x 5.0	13	15.0	WM1, 15, 2	2,700	25	250
6527088	M8	80 mm	65	13.5 x 5.0	13	15.0	WM1, 15, 2	2,700	25	250
6527094	M10	40 mm	22	14.0 x 5.0	17	15.0	WM1, 15, 2	2,900	25	250
6527098	M10	80 mm	62	14.0 x 5.0	17	15.0	WM1, 15, 2	2,900	25	250

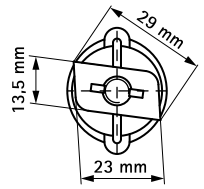

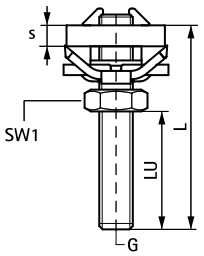

Complementary

530 BIS RapidRail® Stainless Steel Fixing Rail
531 BIS RapidRail® Stainless Steel Cantilever Arm

BIS Stainless Steel Washer (Flat)

(M 29 30)

fixing to BIS RapidRail®

A



B



Features and Benefits

- flat washer
- material: stainless steel 1.4401 (AISI 316)

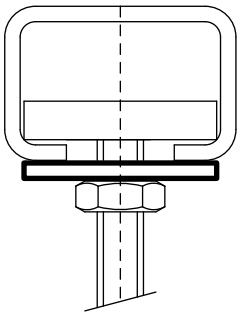

	Part No.	Type	B (mm)	s (mm)	d1 (mm)	For Rail	Pack 1	Pack 2
A	6537006	A	25	2.50	Ø 6.5	WM1, 15, 2	50	500
A	6537008	A	25	2.50	Ø 8.5	WM1, 15, 2	50	500
A	6537010	A	25	2.50	Ø 10.5	WM1, 15, 2	50	500
B	6537012	B	28	3.00	Ø 14.0	WM1, 15, 2	50	500
B	6537016	B	30	3.00	Ø 17.0	WM1, 15, 2	50	500

Ø 10.5 and above tested for fire safety.

A

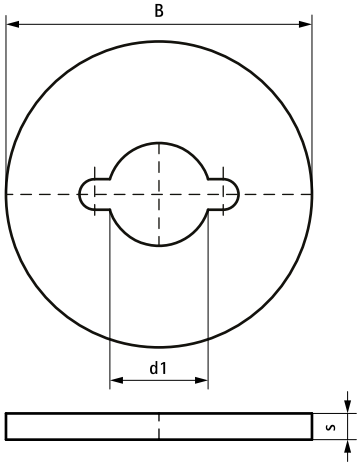

B

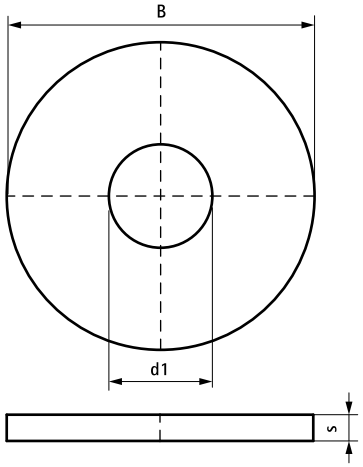

Complementary

530 BIS RapidRail® Stainless Steel Fixing Rail
531 BIS RapidRail® Stainless Steel Cantilever Arm

EN-SG 02/2022- Subject to modifications

BIS Stainless Steel Washer (Flat)

(M 29 35)

fixing to BIS RapidRail®



Features and Benefits

- material: stainless steel 1.4301 (AISI 304)

Part No.	Type	G	Pack 1	App.
6537608	DIN 9021	M8	100	pc.

EN-SG 02/2022- Subject to modifications

BIS Stainless Steel Washer (U-shaped)

(M 29 40)

fixing to BIS RapidRail®



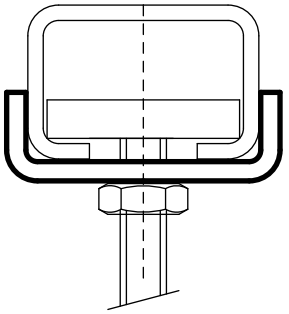

Features and Benefits

- U-shaped washer
- U-shaped for extra stability
- material: stainless steel 1.4401 (AISI 316)

Part No.	For Rail	Pack 1	Pack 2
6537813	WM1, 15, 2	50	250

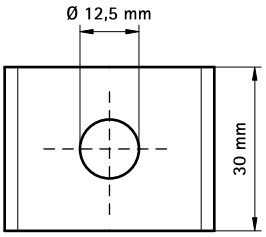

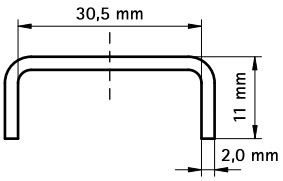

Complementary

530 BIS RapidRail® Stainless Steel Fixing Rail
531 BIS RapidRail® Stainless Steel Cantilever Arm

EN-SG 02/2022- Subject to modifications

BIS Stainless Steel Rail Prop

(M 32 05)

reinforcement of cantilever arm



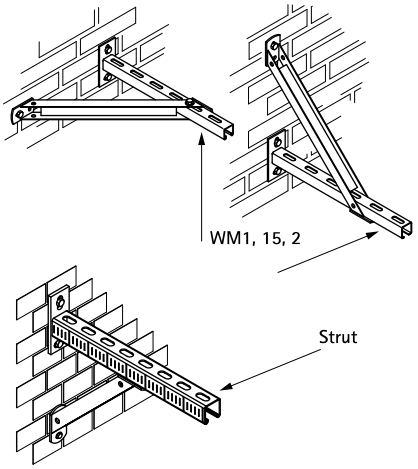

Features and Benefits

- 45° support bracket
- for fixing support under, top or on side of a cantilever arm
- also used to strengthen rail constructions
- CO_2 welded
- material: stainless steel 1.4401 (AISI 316)

Part No.	H (mm)	For Rail	Pack 1
6627220	200	WM1, 15, 2, Strut	10

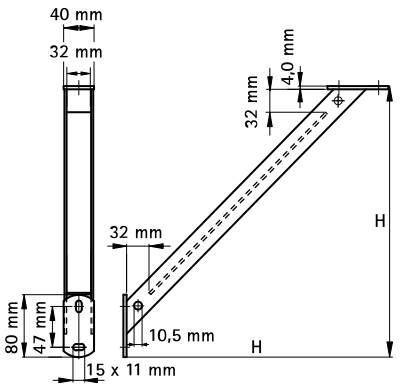

Complementary

530 BIS RapidRail® Stainless Steel Fixing Rail
531 BIS RapidRail® Stainless Steel Cantilever Arm

BIS Stainless Steel Rail Connector

(M 34 05)

to make BIS RapidRail® fabrications

A



B



Features and Benefits

- to make rail fabrications
- material: stainless steel 1.4401 (AISI 316)

	Part No.	a (°)	For Rail	Pack 1
A	6587090	90°	WM1, 15, 2	50
B	6587135	135°	WM1, 15, 2	50

A

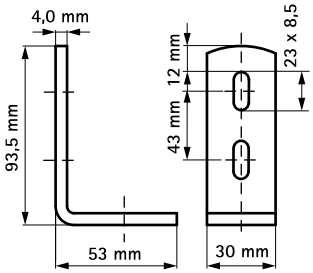

B

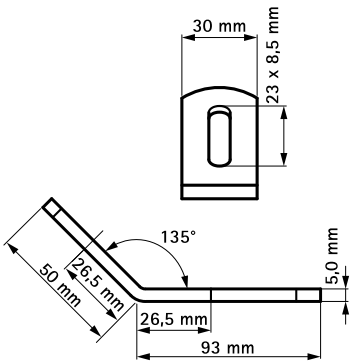

Complementary

530 BIS RapidRail® Stainless Steel Fixing Rail

EN-SG 02/2022- Subject to modifications

BIS RapidRail® Stainless Steel Linear Connector

(M 34 10)

to make BIS RapidRail® fabrications

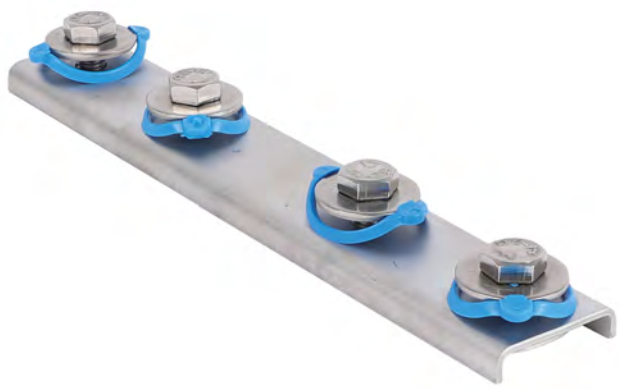



Features and Benefits

- connector with pre-assembled BIS RapidRail® Slide nut(s)
- to make rail fabrications
- suitable for rail WM1, 15, 2
- ready-to-use pre-assembled for a quick fixing, and retains assembly in place before final tightening
- material: stainless steel 1.4401/1.4404 (A4) - EN10088, AISI 316/316L; spring(s) made of of POM (polyoxymethylene), blue (according to RAL 5015)

Part No.	$T_{(max.)}$ (Nm)	For Rail	$F_{a,x}$ (N)	Pack 1
6547001	15.0	WM1, 15, 2	1,547	25

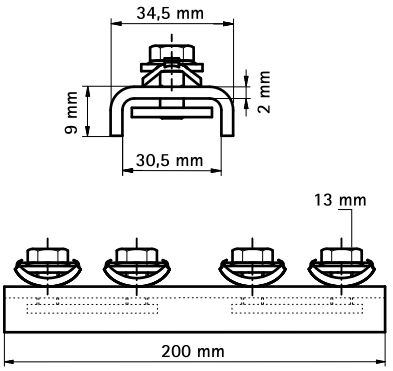

Complementary

530 BIS RapidRail® Stainless Steel Fixing Rail

EN-SG 02/2022- Subject to modifications

BIS RapidRail® Stainless Steel Beam Clamp

(M 37 05)

fixing to steel beam



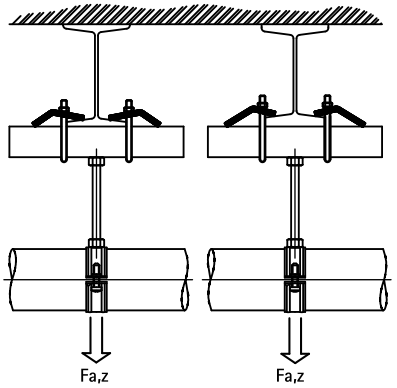

Features and Benefits

- for a solid fixing to steel construction without the need for welding or drilling
- always use 2 beam clamps per fixing
- material: stainless steel 1.4401 (AISI 316)

Part No.	A (mm)	SW1 (mm)	$T_{(max.)}$ (Nm)	For Rail	$F_{a,z}$ (N)	Pack 1
6587011	< 16	10	7.5	WM1, 15, 2	4,500	50

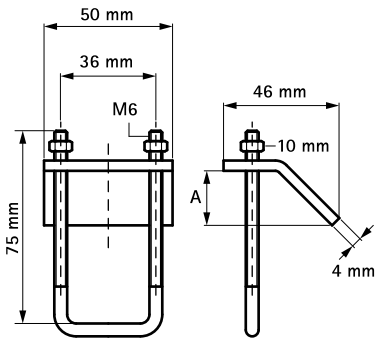

Complementary

530 BIS RapidRail® Stainless Steel Fixing Rail

EN-SG 02/2022- Subject to modifications

BIS RapidStrut® Stainless Steel Fixing Rail

(M 45 05)

suspension and support



6507X27 6507X47

Features and Benefits

- universal rail system
- distance between rail end and first hole is always equal
- a continuous graduated centimetre scale on one side
- inward formed flanges with serrated profile for extra grip
- material: stainless steel 1.4404 (AISI 316L)

Part No.	L	B (mm)	H (mm)	s (mm)	S (mm)	BndS	BndL
6507327	3 m	41	21	2.50	22	30	300
6507627	6 m	41	21	2.50	22	60	600
6507347	3 m	41	41	2.50	22	30	150
6507647	6 m	41	41	2.50	22	60	300

Strut 41x41x2.5 and above tested for fire safety.
For more information about the max. allowed load ($F_{a,z}$) please refer to the loading tables or our online datasheet 'Technical Details BIS RapidStrut®'.

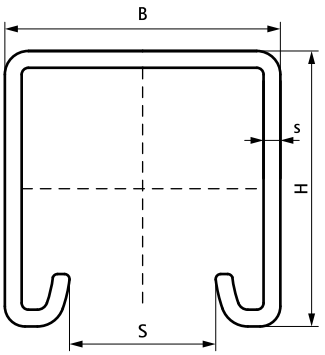

Complementary

547 BIS RapidStrut® Stainless Steel Slide Nut G2
548 BIS RapidStrut® Stainless Steel Slide Nut with Tabs
554 BIS Strut Stainless Steel Tee-Bolt

Complementary

546 BIS RapidStrut® Stainless Steel Base Plate G2

BIS RapidStrut® Stainless Steel Fixing Rail Double

(M 45 10)

suspension and support

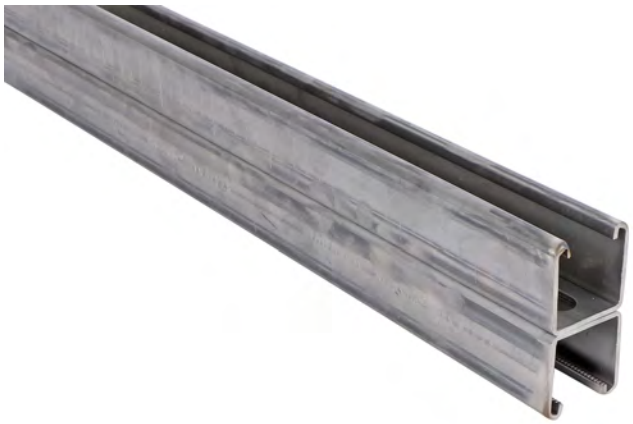

Features and Benefits

- universal rail system
- distance between rail end and first hole is always equal
- a continuous graduated centimetre scale on one side
- inward formed flanges with serrated profile for extra grip
- material: stainless steel 1.4404 (AISI 316L)
- for more information about the max. allowed load ($F_{a,z}$) please refer to the loading tables or our online datasheet 'Technical Details BIS RapidStrut®'

Part No.	L	B (mm)	H (mm)	s (mm)	S (mm)	BndS	BndL
6507646	6 m	41	82 (41 x 2)	2.50	22	60	300
Strut 41x41x2.5 and above tested for fire safety. For more information about the max. allowed load ($F_{a,z}$) please refer to the loading tables or our online datasheet 'Technical Details BIS RapidStrut®'.							

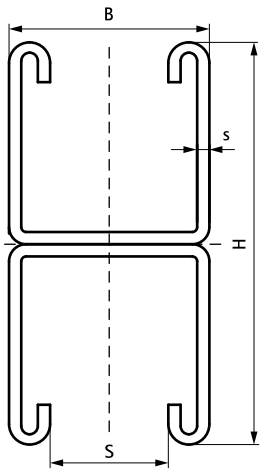

EN-SG 02/2022- Subject to modifications

BIS RapidStrut® Stainless Steel Cantilever Arm

(M 50 05)

fixing to wall



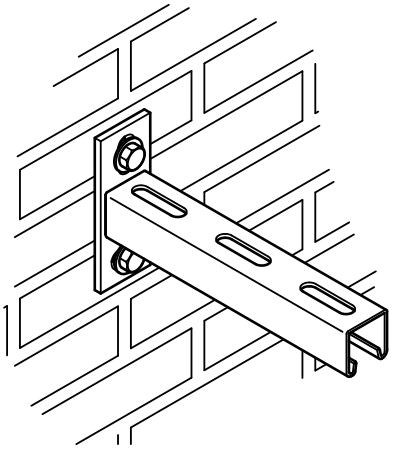

Features and Benefits

- wall plate welded on Strut Profile
- slots at 90° to each other to simplify fixing
- CO_2 welded
- inward formed flanges with serrated profile for extra grip
- material: stainless steel 1.4401 (AISI 316)

Part No.	L	B (mm)	H (mm)	s (mm)	s1 (mm)	d1 (mm)	S (mm)	k (mm)	From Rail	Pack 1
6607861	150 mm	45	130	2.5	8.0	30 x 13	22	87.5	Strut 41x41	10
6607870	200 mm	45	130	2.5	8.0	30 x 13	22	87.5	Strut 41x41	10
6607862	300 mm	45	130	2.5	8.0	30 x 13	22	87.5	Strut 41x41	10
6607874	400 mm	45	130	2.5	8.0	30 x 13	22	87.5	Strut 41x41	10
6607863	450 mm	45	130	2.5	8.0	30 x 13	22	87.5	Strut 41x41	10
6607873	500 mm	45	130	2.5	8.0	30 x 13	22	87.5	Strut 41x41	10
6607864	600 mm	45	130	2.5	8.0	30 x 13	22	87.5	Strut 41x41	8
6607865	750 mm	45	130	2.5	8.0	30 x 13	22	87.5	Strut 41x41	8

For more information about the max. allowed load ($F_{a,z}$) please refer to the loading tables or our online datasheet 'Technical Details BIS RapidStrut®'.

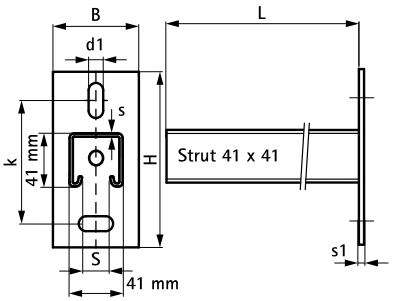

Complementary

547 BIS RapidStrut® Stainless Steel Slide Nut G2

548 BIS RapidStrut® Stainless Steel Slide Nut with Tabs

554 BIS Strut Stainless Steel Tee-Bolt

Complementary

546 BIS RapidStrut® Stainless Steel Base Plate G2

BIS RapidStrut® Stainless Steel Base Plate G2

(M 51 05)



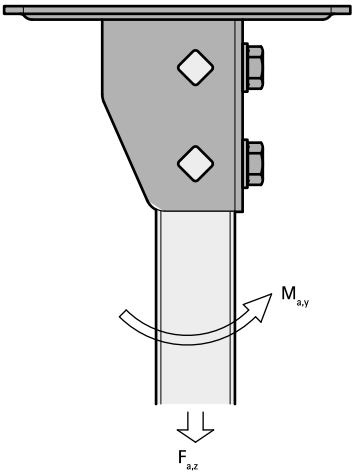

Features and Benefits

- flexible base plate for Strut rails
- suitable for all Strut rail up to 82mm height
- open side of rails 41x41 can be turned to all sides
- at high loads we advise to install with throughbolts
- timesaving with pre-assembled fasteners
- material: stainless steel 1.4401/1.4404 (A4) - EN10088, AISI 316/316L; spring(s) made of of POM (polyoxymethylene), blue (according to RAL 5015)

Part No.	L	B (mm)	H (mm)	h (mm)	s (mm)	s1 (mm)	d1 (mm)	S (mm)	k (mm)	k1 (mm)	$F_{a,z}$ (N)	$F_{a,z\ 2}$ (N)	$M_{a,y}$ (Nm)	Pack 1
665875400	107 mm	85	180	56	4.0	5.0	20 x 14	42	130	50	3,636	5,151	485.0	10

$F_{a,z}$: max. allowed load in combination with 2 slide nuts M10, tightened with 40 Nm.
$F_{a,z}$ 2: max. allowed load in combination with 2 throughbolts M10, tightened with 40 Nm.
$M_{a,y}$: max. moment in combination with 2 throughbolts M10, tightened with 40 Nm.

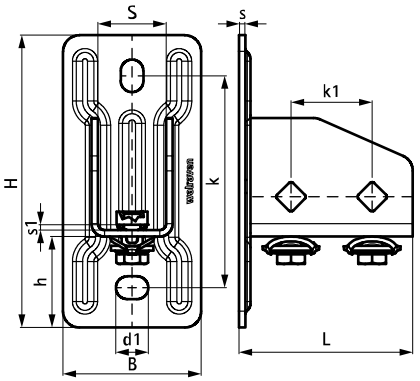

Complementary

543 BIS RapidStrut® Stainless Steel Fixing Rail
544 BIS RapidStrut® Stainless Steel Fixing Rail Double
582 WTB1 Throughbolt Anchor SSt

EN-SG 02/2022- Subject to modifications

BIS RapidStrut® Stainless Steel Slide Nut G2

(M 52 05)

fixing to Strut rail



Features and Benefits

- slide nut with washer and BIS RapidStrut® spring
- to connect pipe clamps to rails by using threaded rods
- ready-to-use pre-assembled for a quick fixing, and retains assembly in place before final tightening
- material: stainless steel 1.4401 (A4) - EN 10088, AISI 316; spring(s) made of POM (PolyOxyMethylene), blue (according to RAL 5015)

Part No.	G	s (mm)	T_{inst} (Nm)	For Rail	$F_{a,z}$ (N)	$F_{a,x}$ (N)	Pack 1	Pack 2
665175108	M8	6.0	11	Strut	3,120	1,100	20	200
665175110	M10	8.0	15	Strut	5,000	1,250	20	200

Tested values in combination with BIS RapidStrut® Rail 41x41x2.5mm.
More details can be found on the Technical Datasheet.

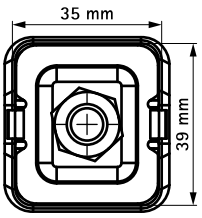

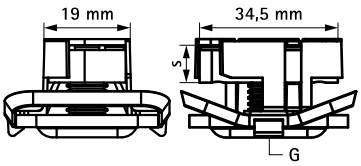

Complementary

543 BIS RapidStrut® Stainless Steel Fixing Rail
544 BIS RapidStrut® Stainless Steel Fixing Rail Double
545 BIS RapidStrut® Stainless Steel Cantilever Arm

BIS RapidStrut® Stainless Steel Slide Nut with Tabs

(M 52 08)

fixing to Strut rail



Features and Benefits

- slide nut with plastic 'tabs'
- for all types of Strut Rail
- for tight fixing of accessories (e.g. connectors) on rail
- with plastic tabs which simplifies inserting and positioning
- material: slide nut made of stainless steel 1.4401 (AISI 316); 'wings' made of PP (polypropylene), blue

Part No.	G	s (mm)	$T_{(max.)}$ (Nm)	For Rail	$F_{a,z}$ (N)	$F_{a,x}$ (N)	Pack 1
651867006	M6	5.0	7.0	Strut	2,660	950	100
651867008	M8	6.0	25.0	Strut	4,500	2,200	100
651867010	M10	8.0	40.0	Strut	5,000	2,550	100
651867012	M12	9.0	50.0	Strut	5,000	2,950	100

Tested values in combination with BIS RapidStrut® Rail 41x41x2.5mm.
More details can be found on the Technical Datasheet.

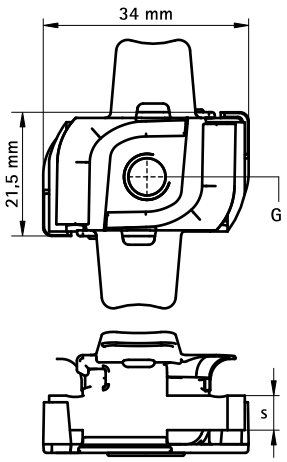

Complementary

543 BIS RapidStrut® Stainless Steel Fixing Rail
545 BIS RapidStrut® Stainless Steel Cantilever Arm

EN-SG 02/2022- Subject to modifications

BIS Strut Stainless Steel T-shape Base Plate

(M 53 10)



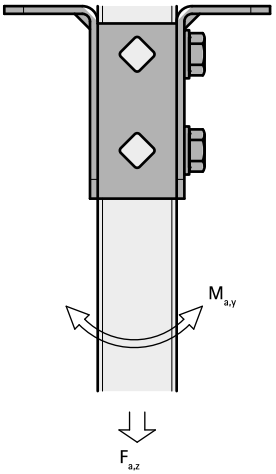

Features and Benefits

- highly flexible base plate for Strut rails
- open side of the rail can be turned to all sides
- extra safety by reinforced bending
- hole pattern is adapted to the hole pattern of Strut rails
- material: stainless steel 1.4401 (A4) - EN 10088, AISI 316

Part No.	L	B (mm)	H (mm)	h (mm)	s (mm)	d1 (mm)	S (mm)	k (mm)	k1 (mm)	$F_{a,z}$ (N)	$F_{a,z\ 2}$ (N)	$M_{a,y}$ (Nm)	Pack 1
66587361	138 mm	45	100	91	4.0	18 x 12	42	95	50	3,636	3,636	164.0	10

$F_{a,z}$: max. allowed load in combination with 2 slide nuts M10, tightened with 40 Nm.
$F_{a,z}$ 2: max. allowed load in combination with 2 throughbolts M10, tightened with 40 Nm.
$M_{a,y}$: max. moment in combination with 2 throughbolts M10, tightened with 40 Nm.

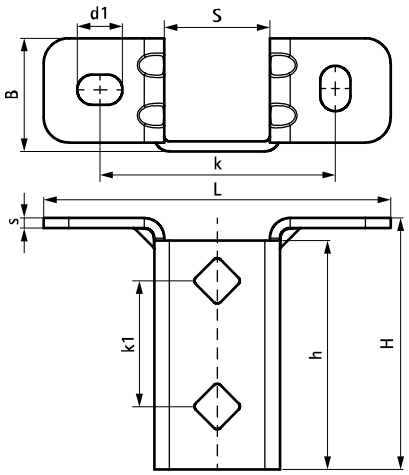

EN-SG 02/2022- Subject to modifications

Complementary

543 BIS RapidStrut® Stainless Steel Fixing Rail
544 BIS RapidStrut® Stainless Steel Fixing Rail Double
582 WTB1 Throughbolt Anchor SSt

Complementary

581 WDI1 Drop-in Anchor SSt
548 BIS RapidStrut® Stainless Steel Slide Nut with Tabs

BIS Strut Stainless Steel Wall Plate (Hinged)

(M 53 15)

fixing to wall, floor or ceiling



Features and Benefits

- wall plate with hinging U-profile
- for fixing of rail to wall, floor or ceiling
- rail can be fixed with slot downwards or sideways
- also used to strengthen constructions with Strut 41x41
- material: stainless steel 1.4404 (A4) - EN 10088, AISI 316L

Part No.	L	B (mm)	H (mm)	b (mm)	s (mm)	d1 (mm)	d2 (mm)	S (mm)	k (mm)	k1 (mm)	For Rail	$F_{a,z\ 2}$ (N)	Pack 1	
66587814	120 mm	83	157	59	4.0	25x12.2	13.8	42	71	50	Strut	9,700	10	*
** Tested with rail 41x41x2.5 with throughbolts. More details can be found on the Technical Datasheet.*														

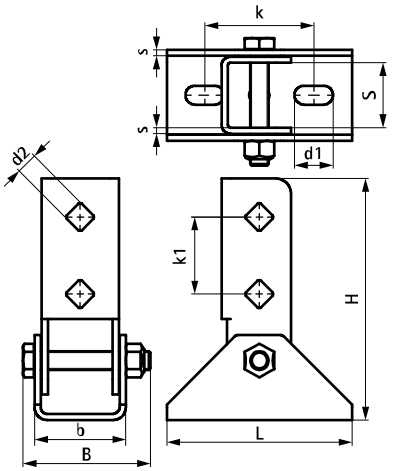

Complementary

543 BIS RapidStrut® Stainless Steel Fixing Rail
544 BIS RapidStrut® Stainless Steel Fixing Rail Double
545 BIS RapidStrut® Stainless Steel Cantilever Arm

Complementary

582 WTB1 Throughbolt Anchor SSt
581 WDI1 Drop-in Anchor SSt
548 BIS RapidStrut® Stainless Steel Slide Nut with Tabs

EN-SG 02/2022- Subject to modifications

BIS Strut Stainless Steel Adjustable Support

(M 53 20)

fixing to wall, floor or ceiling



Features and Benefits

- especially for angled installations with bracings
- suitable for fixing to wall, ceiling, floor or directly on rails
- adjustable angle up to 90°
- with two holes Ø13 mm
- material: stainless steel 1.4401 (A4) - EN 10088, AISI 316

Part No.	L	B (mm)	H (mm)	d1 (mm)	d2 (mm)	For Rail	$F_{a,z}$ (N)	Pack 1
66587718	50 mm	78	63	Ø 13.0	Ø 13.0	Strut	5,000	10
Max. allowed load: when used at an angle of 45° on wall/ceiling.								

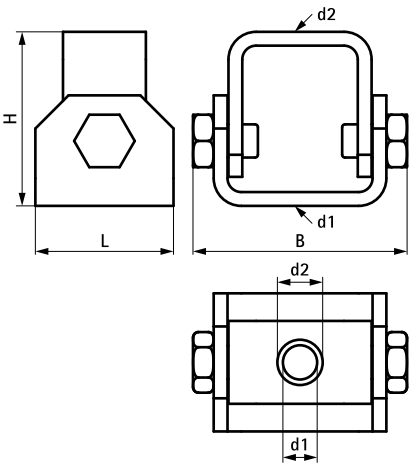

Complementary

543 BIS RapidStrut® Stainless Steel Fixing Rail
544 BIS RapidStrut® Stainless Steel Fixing Rail Double
545 BIS RapidStrut® Stainless Steel Cantilever Arm

Complementary

577 BIS Stainless Steel Threaded Rod
582 WTB1 Throughbolt Anchor SSt
581 WDI1 Drop-in Anchor SSt

EN-SG 02/2022- Subject to modifications

BIS Strut Stainless Steel Slide Nut

(M 55 04)

fixing to Strut rail



Features and Benefits

- for all types of Strut Rail
- for tight fixing of accessories (e.g. connectors) on rail
- material: stainless steel 1.4401 (AISI 316)

Part No.	G	s (mm)	$T_{(max.)}$ (Nm)	For Rail	$F_{a,z}$ (N)	$F_{a,x}$ (N)	Pack 1	Pack 2
6517706	M6	5.0	7.0	Strut	2,660	950	25	250
6517708	M8	6.0	25.0	Strut	4,500	2,200	25	250
6517710	M10	8.0	40.0	Strut	5,000	2,550	25	250
6517712	M12	9.0	50.0	Strut	5,000	2,950	25	250

Tested values in combination with BIS RapidStrut® Rail 41x41x2.5mm.
More details can be found on the Technical Datasheet.

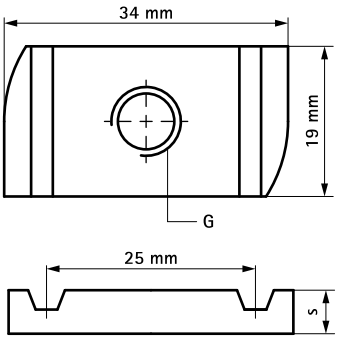

Complementary

543 BIS RapidStrut® Stainless Steel Fixing Rail
545 BIS RapidStrut® Stainless Steel Cantilever Arm

Alternative

548 BIS RapidStrut® Stainless Steel Slide Nut with Tabs

EN-SG 02/2022- Subject to modifications

BIS Strut Stainless Steel Square Slide Nut

(M 55 06)

fixing to Strut rail



Features and Benefits

- extra massive slide nut to connect HD clamps M16 to Strut Rails
- material: stainless steel 1.4401 (A4) - EN 10088, AISI 316

Part No.	G	For Rail	Pack 1
6517716	M16	Strut	250

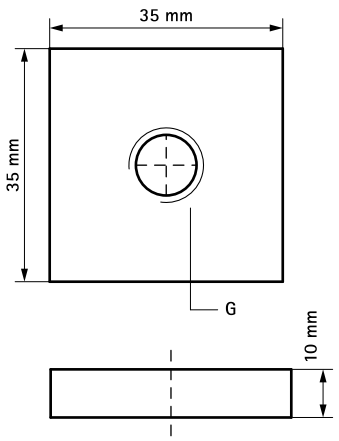

BIS Strut Stainless Steel Tee-Bolt

(M 55 12)

fixing to Strut rail



Features and Benefits

- slide nut with stud bolt and washer
- material: stainless steel

Part No.	G	L	LU (mm)	s (mm)	SW1 (mm)	For Rail	Pack 1	Pack 2
6527734	M8	40 mm	18.0	6.0	13	Strut	25	250
6527744	M10	50 mm	24.0	8.0	17	Strut	25	250
6527754	M12	50 mm	21.5	9.0	19	Strut	25	250

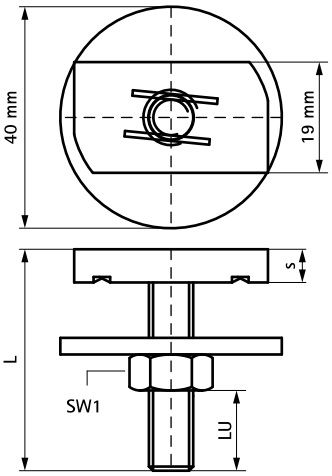

Complementary

543 BIS RapidStrut® Stainless Steel Fixing Rail
545 BIS RapidStrut® Stainless Steel Cantilever Arm

EN-SG 02/2022- Subject to modifications

BIS Strut Stainless Steel Washer (Flat)

(M 55 16)

fixing to Strut rail



Features and Benefits

- flat washer
- material: stainless steel 1.4401 (AISI 316)

Part No.	d1 (mm)	For Rail	Pack 1
6537508	Ø 8.5	Strut	100
6537510	Ø 10.5	Strut	100
6537512	Ø 12.5	Strut	100
Ø 10.5 and above tested for fire safety.			

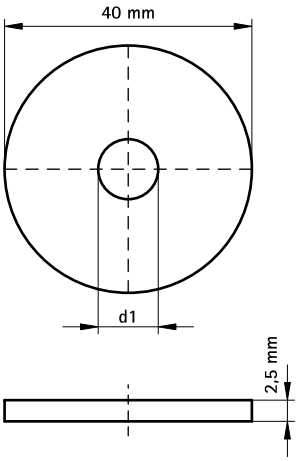

Complementary

543 BIS RapidStrut® Stainless Steel Fixing Rail
545 BIS RapidStrut® Stainless Steel Cantilever Arm

EN-SG 02/2022- Subject to modifications

BIS Strut Stainless Steel Washer (U-shaped)

(M 55 19)

to make Strut rail fabrications



Features and Benefits

- U-shaped washer
- U-shaped for extra stability
- material: stainless steel 1.4401 (AISI 316)

Part No.	d1 (mm)	For Rail	Pack 1
6571008	Ø 9.0	Strut	50
6571010	Ø 11.0	Strut	50
6571012	Ø 13.0	Strut	50
6571016	Ø 17.0	Strut	50
Ø 11.0 and above tested for fire safety.			

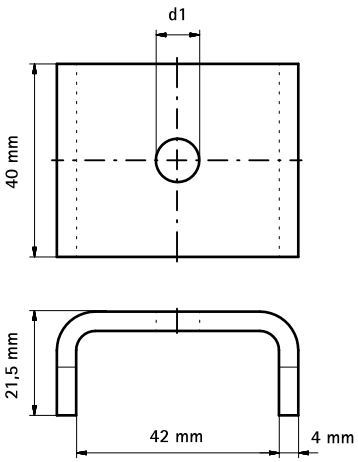

Complementary

543 BIS RapidStrut® Stainless Steel Fixing Rail
545 BIS RapidStrut® Stainless Steel Cantilever Arm

EN-SG 02/2022- Subject to modifications

BIS Strut Stainless Steel Connector 90° Rigid

(M 60 04)

to make Strut rail fabrications



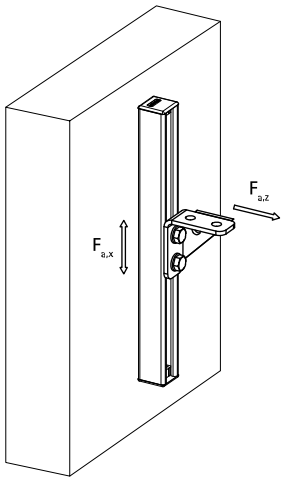

Features and Benefits

- reinforced connector to make rigid fabrications with Strut rails
- easy fitting due to rounded edges
- material: stainless steel 1.4404 (A4) - EN 10088, AISI 316L

Part No.	L	B (mm)	H (mm)	s (mm)	d1 (mm)	k (mm)	a (°)	For Rail	$F_{a,z}$ (N)	$F_{a,z\ 2}$ (N)	$F_{a,x}$ (N)	$F_{a,x\ 2}$ (N)	Pack 1
66587291	110 mm	40	110	4	12.2	50	90°	Strut	4,000	8,000	3,000	7,000	25

$F_{a,z}$: max. allowed load acc. RAL GZ-655D (with rail 41x41x1.5).
$F_{a,z2}$: max. allowed load (with rail 41x41x2.5).
$F_{a,x}$: max. allowed load acc. RAL GZ-655D (with rail 41x41x1.5 and bolted 2 x M12 - 30Nm).
$F_{a,x2}$: max. allowed load (with rail 41x41x2.5 and bolted 2 x M12 - 60Nm).

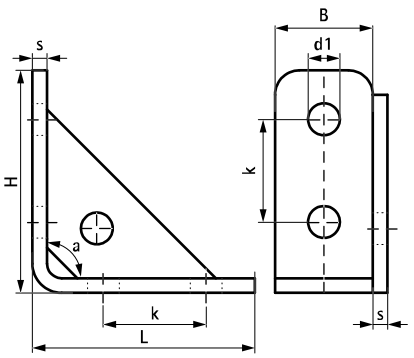

Complementary

543 BIS RapidStrut® Stainless Steel Fixing Rail
544 BIS RapidStrut® Stainless Steel Fixing Rail Double
545 BIS RapidStrut® Stainless Steel Cantilever Arm

Complementary

548 BIS RapidStrut® Stainless Steel Slide Nut with Tabs
573 BIS Stainless Steel Hexagon Head Screw
555 BIS Strut Stainless Steel Washer (Flat)

EN-SG 02/2022- Subject to modifications

BIS Strut Stainless Steel Angle Connector 90°

(M 60 08)

to make Strut rail fabrications



Features and Benefits

- angle connector for all Strut rails to make fabrications
- the hole pattern is adapted to the hole pattern of Strut rails to use throughbolts
- user friendly by rounded edges
- with reinforced bend for extra strength
- material: stainless steel 1.4404 (A4) - EN 10088, AISI 316L

Part No.	Model	L	B (mm)	H (mm)	s (mm)	d1 (mm)	k (mm)	a (°)	Pack 1
66587201	Short / short	62 mm	40	62	4.0	Ø 12.2	-	90	50
66587221	Short / long	62 mm	40	110	4.0	Ø 12.2	50	90	25
66587228	Long / long	110 mm	40	110	4.0	Ø 12.2	50	90	25

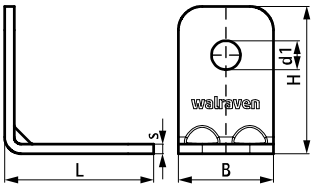

66587201

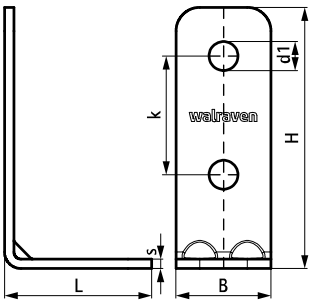

66587221

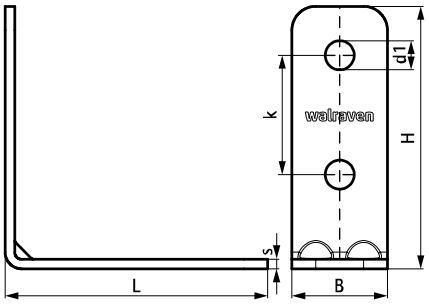

66587228

Complementary

545 BIS RapidStrut® Stainless Steel Cantilever Arm

548 BIS RapidStrut® Stainless Steel Slide Nut with Tabs

573 BIS Stainless Steel Hexagon Head Screw

Complementary

555 BIS Strut Stainless Steel Washer (Flat)

EN-SG 02/2022- Subject to modifications

BIS Strut Stainless Steel Angle Connector 135°

(M 60 09)

to make Strut rail fabrications



Features and Benefits

- angle connector for all Strut rails to make fabrications
- the hole pattern is adapted to the hole pattern of Strut rails to use throughbolts
- user friendly by rounded edges
- with reinforced bend for extra strength
- material: stainless steel 1.4404 (A4) - EN 10088, AISI 316L

Part No.	Model	L	B (mm)	H (mm)	s (mm)	d1 (mm)	k (mm)	a (°)	Pack 1
66587256	Long / long	180 mm	40	80	4.0	Ø 12.2	50	135	25

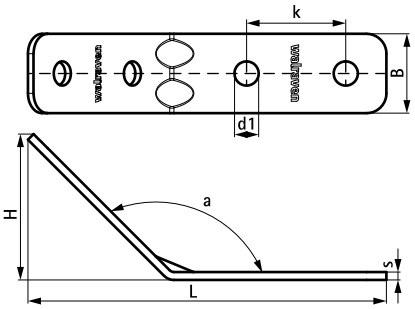

Complementary

543 BIS RapidStrut® Stainless Steel Fixing Rail
544 BIS RapidStrut® Stainless Steel Fixing Rail Double
545 BIS RapidStrut® Stainless Steel Cantilever Arm

Complementary

548 BIS RapidStrut® Stainless Steel Slide Nut with Tabs
555 BIS Strut Stainless Steel Washer (Flat)
573 BIS Stainless Steel Hexagon Head Screw

BIS Strut Stainless Steel Connector 90° / 2D

(M 60 110)

to make Strut rail fabrications



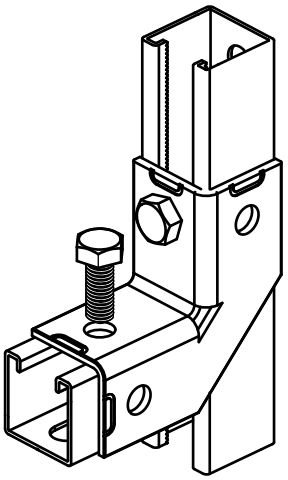

Features and Benefits

- flexible connector allows different rail positioning
- material: stainless steel 1.4401 (AISI 316)
- strong connection by surrounding the rail

Part No.	d (mm)	Model	L	B (mm)	B2 (mm)	H (mm)	s (mm)	k (mm)	a (°)	For Rail	Pack 1
66597914	13 mm	2+2 / 90	105 mm	105	45	45	4.0	-	90	Strut	10

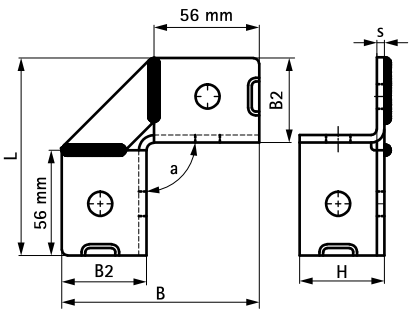

Complementary

543 BIS RapidStrut® Stainless Steel Fixing Rail
544 BIS RapidStrut® Stainless Steel Fixing Rail Double
548 BIS RapidStrut® Stainless Steel Slide Nut

EN-SG 02/2022- Subject to modifications

BIS Strut Stainless Steel Cross Connector

(M 60 13)

to make Strut rail fabrications



Features and Benefits

- connector to make cross connections between Strut rails
- to connect Strut rails to wall or ceiling
- the hole pattern is adapted to the hole pattern of Strut rails to use throughbolts
- user friendly by rounded edges
- material: stainless steel 1.4404 (A4) - EN 10088, AISI 316L

Part No.	L	B (mm)	H (mm)	s (mm)	d1 (mm)	S (mm)	k (mm)	For Rail	Pack 1
66587292	141	40	24	4.0	12.2	42	100	Strut 41x21	25
66587294	141	40	44	4.0	12.2	42	100	Strut 41x41	25
66587298	141	40	84	4.0	12.2	42	100	Strut 41x82	10

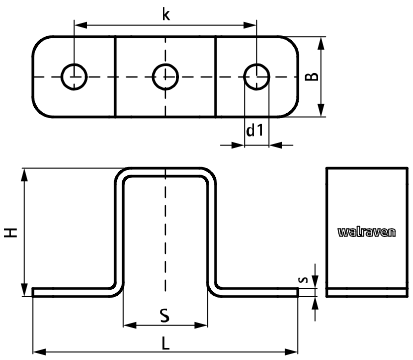

Complementary

543 BIS RapidStrut® Stainless Steel Fixing Rail
545 BIS RapidStrut® Stainless Steel Cantilever Arm
548 BIS RapidStrut® Stainless Steel Slide Nut

Complementary

573 BIS Stainless Steel Hexagon Head Screw
555 BIS Strut Stainless Steel Washer (Flat)

BIS Strut Stainless Steel T-Connector

(M 60 14)

to make Strut rail fabrications



Features and Benefits

- T-connector for Strut rails
- the hole pattern is adapted to the hole pattern of Strut rails to use throughbolts
- user friendly by rounded edges
- extra safety by two connecting points per direction
- material: stainless steel 1.4404 (A4) - EN 10088, AISI 316L

Part No.	L	B (mm)	s (mm)	d1 (mm)	k (mm)	For Rail	Pack 1
66587301	131 mm	80	4.0	Ø 12.2	41	Strut	25

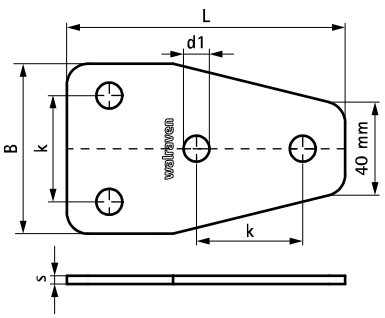

Complementary

543 BIS RapidStrut® Stainless Steel Fixing Rail
544 BIS RapidStrut® Stainless Steel Fixing Rail Double
548 BIS RapidStrut® Stainless Steel Slide Nut

Complementary

573 BIS Stainless Steel Hexagon Head Screw
555 BIS Strut Stainless Steel Washer (Flat)

EN-SG 02/2022- Subject to modifications

BIS Strut Stainless Steel U-Connector

(M 60 19)

for linear connections of Strut Rails



Features and Benefits

- U-shaped for extra stability
- longitudinal connector for all Strut rails
- for strong connections and in combination with Double Strut rails it is advised to use linear connectors on both sides of the rail
- the hole pattern is adapted to the hole pattern of Strut rails to use throughbolts
- material: stainless steel 1.4404 (A4) - EN 10088, AISI 316L

Part No.	L	B (mm)	H (mm)	s (mm)	d1 (mm)	S (mm)	k (mm)	For Rail	Pack 1
66587121	175 mm	50	21.5	4.0	Ø 12.2	42	45	Strut 41x21	20
66587141	175 mm	50	41.5	4.0	Ø 12.2	42	45	Strut 41x41 + 41x41D	10

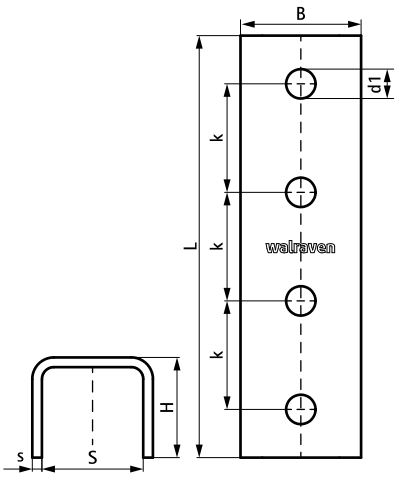

Complementary

543 BIS RapidStrut® Stainless Steel Fixing Rail
544 BIS RapidStrut® Stainless Steel Fixing Rail Double
548 BIS RapidStrut® Stainless Steel Slide Nut

Complementary

573 BIS Stainless Steel Hexagon Head Screw
555 BIS Strut Stainless Steel Washer (Flat)

BIS Strut Stainless Steel Z-Connector

(M 60 23)

to make Strut rail fabrications



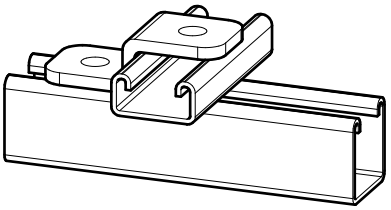

Features and Benefits

- to connect Strut rails to wall or ceiling
- connector to make Z-connections between Strut rails
- can also be used to hang threaded rods from the ceiling with the possibility to adjust the height even after the pipe clamp / pipe is installed
- user friendly by rounded edges
- material: stainless steel 1.4404 (A4) - EN 10088, AISI 316L

Part No.	L	B (mm)	H (mm)	h (mm)	s (mm)	d1 (mm)	k (mm)	For Rail	Pack 1
66587504	86 mm	40	45	41	4.0	Ø 12.2	-	Strut 41x41	50

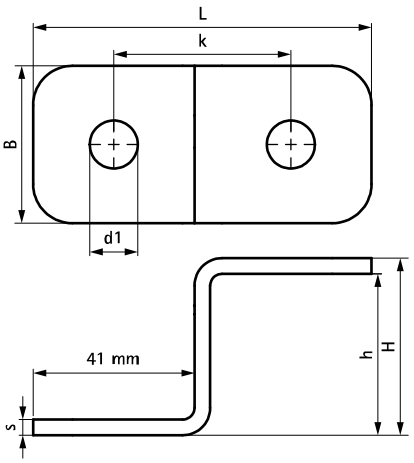

Complementary

543 BIS RapidStrut® Stainless Steel Fixing Rail
548 BIS RapidStrut® Stainless Steel Slide Nut with Tabs
573 BIS Stainless Steel Hexagon Head Screw

Complementary

555 BIS Strut Stainless Steel Washer (Flat)

EN-SG 02/2022- Subject to modifications

BIS Strut Stainless Steel Beam Clamp

(M 62 16)

to connect Strut Rail to steel beam



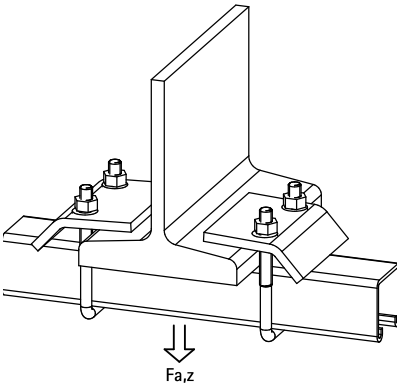

Features and Benefits

- for a solid fixing under flanges without welding or drilling
- always use 2 beam clamps per fixing
- material: stainless steel 1.4401/1.4404 (A4) - EN 10088, AISI 316/316L

Part No.	A (mm)	G	L	B (mm)	H (mm)	s (mm)	Lm1 (mm)	SW1 (mm)	For Rail	$F_{a,z}$ (N)	$F_{a,z}$ (kg)	Pack 1
66587711	17.5	M10	69 mm	80	90	6.0	60	17	Strut 41x21 + 41x41	5,700		25
66587721	20.0	M10	69 mm	80	130	6.0	75	17	Strut 41x41D	5,700	570	25

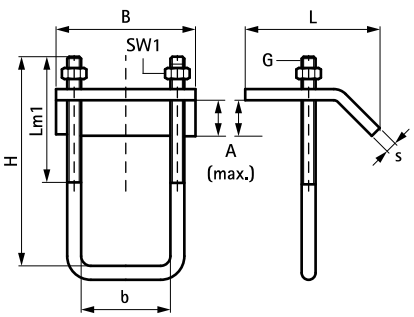

Complementary

543 BIS RapidStrut® Stainless Steel Fixing Rail
544 BIS RapidStrut® Stainless Steel Fixing Rail Double

BIS Strut Stainless Steel Beam Clamp

(M 62 17)

to make Strut rail fabrications



657 1 731 657 1 751

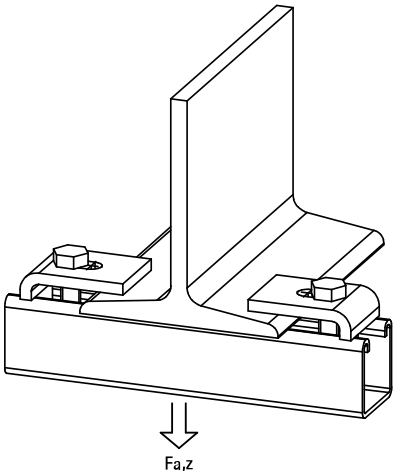

Features and Benefits

- for a solid fixing to steel construction without the need for welding or drilling
- always use 2 beam clamps per fixing
- material: stainless steel

Part No.	A (mm)	L	B (mm)	h (mm)	s (mm)	d1 (mm)	k (mm)	$F_{a,z}$ (N)	Pack 1
6571731	10	50 mm	50	-	6.0	22 x 11	30	8,000	50
6571751	10	40 mm	55	15	6.0	22 x 11	30	8,000	50

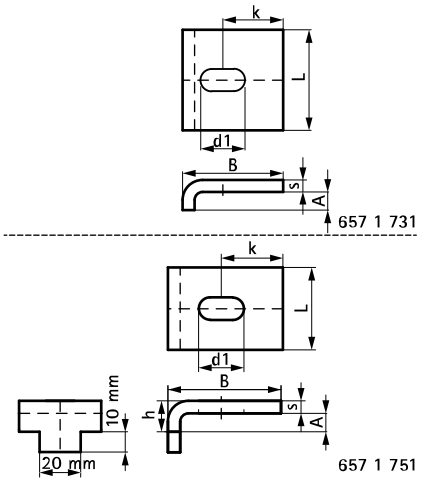

EN-SG 02/2022- Subject to modifications

BIS Stainless Steel Beam Clamp Model O V2A

(M 62 25)

for flange



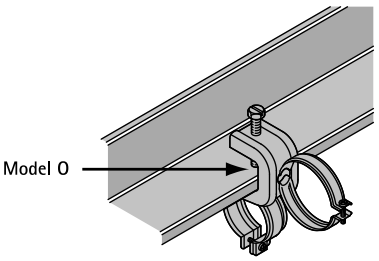

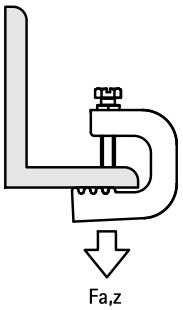

Features and Benefits

- for a solid fixing to steel construction without the need for welding or drilling
- up to flange thickness 45 mm
- with hole Ø 14 mm for fixing of BIS IC-clamp, stud bolt or S-Hook
- with serration for increased security
- material: stainless steel 1.4301 (AISI 304)
- see also: IC-clamp (for conduit or cable)

Part No.	A (mm)	$F_{a,z}$ (N)	Pack 1
6077720	≤20	1,100	25
6077730	≤30	1,200	25
6077745	≤45	1,300	25

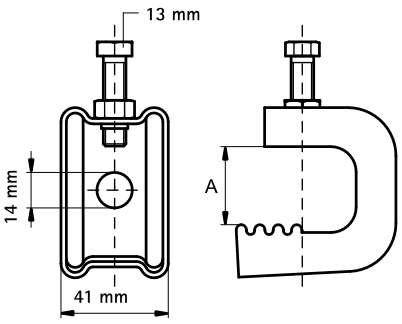

BIS Stainless Steel Wall Plate Resistance Welded

(M 65 05)

fixing to wall or ceiling



Features and Benefits

- slots at 90° to each other to simplify fixing
- with resistance welded connection nut
- Part No. 670 7 0XX: material: stainless steel 1.4301 (AISI 304)
- Part No. 67170XX: material: stainless steel 1.4404 (AISI 316L)

Part No.	G	L	B (mm)	s (mm)	d1 (mm)	d2 (mm)	k (mm)	$F_{a,z}$ (N)	Pack 1	Pack 2
6707006	M6	80 mm	25	3.0	15 x 8.5	15 x 8.5	50	2,500	50	125
6707008	M8	80 mm	25	3.0	15 x 8.5	15 x 8.5	50	2,500	50	250
6707010	M10	80 mm	25	3.0	15 x 8.5	15 x 8.5	50	2,500	50	250
6717008	M8	80 mm	35	3.0	15 x 8.5	15 x 8.5	50	5,000	40	-
6717010	M10	145 mm	35	3.0	30 x 11.0	25 x 11.0	100	3,000	40	-

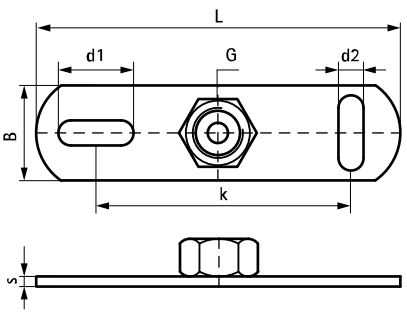

Complementary

577 BIS Stainless Steel Threaded Rod

EN-SG 02/2022- Subject to modifications

BIS Stainless Steel Wall Plate Resistance Welded

(M 65 07)

fixing to wall or ceiling



6717012 6717016 6717021

Features and Benefits

- slots at 90° to each other to simplify fixing
- with CO_2 welded connection nut
- material: stainless steel 1.4404 (AISI 316L)

Part No.	G	L	B (mm)	s (mm)	d1 (mm)	d2 (mm)	k (mm)	$F_{a,z}$ (N)	Pack 1
6717012	M12	145 mm	35	3.0	30 x 11.0	25 x 11.0	100	3,500	40
6717016	M16	145 mm	35	3.0	30 x 11.0	25 x 11.0	100	3,500	50
6717021	G½"	145 mm	35	3.0	30 x 11.0	25 x 11.0	100	3,000	50

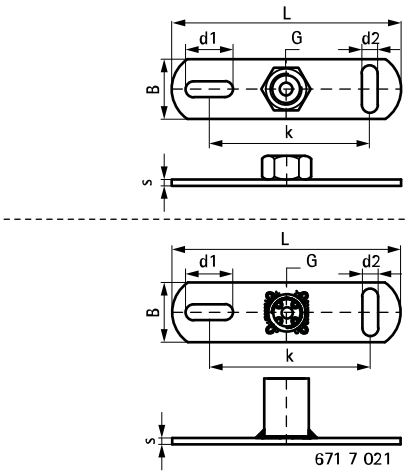

Complementary

577 BIS Stainless Steel Threaded Rod

BIS Stainless Steel Wall Plate
with Welded Stud Bolt 672

(M 65 10)

fixing to wall or ceiling



Features and Benefits

- slots at 90° to each other to simplify fixing
- with resistance welded male stud bolt
- material: stainless steel 1.4301 (AISI 304)

Part No.	G	H (mm)	Lm1 (mm)	$F_{a,z}$ (N)	Pack 1	Pack 2
6727008	M8	44	35	2,500	50	200

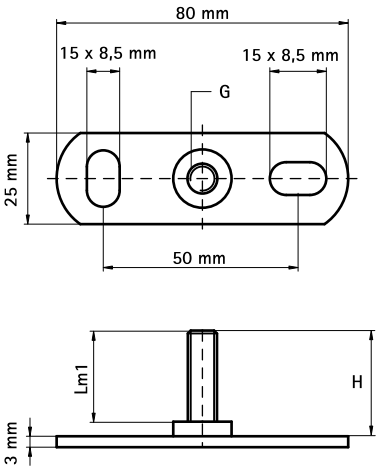

EN-SG 02/2022- Subject to modifications

BIS Stainless Steel Roofing Sheet Hanger

(M 67 05)

fixing to profiled roofing sheet



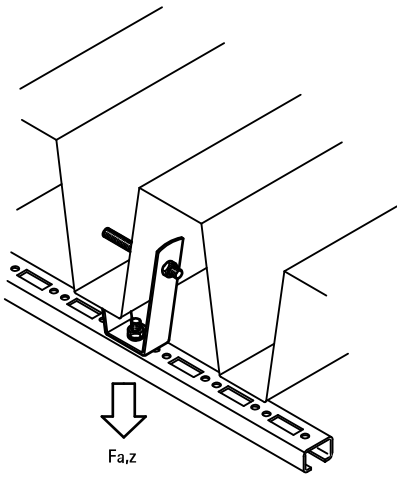

Features and Benefits

- for mounting to profiled roofing sheet by means of pop rivets or threaded rod
- for applications in environments requiring increased corrosion resistance
- variable distance to roof hanger by using a threaded rod
- material: stainless steel, A4

Part No.	L	B (mm)	B2 (mm)	b3 (mm)	H (mm)	h (mm)	s (mm)	d1 (mm)	h2 (mm)	Fa,z (N)	Pack 1
6787001	25 mm	97.9	81.8	38	99.6	96.1	2.5	Ø 13.0 mm	75.7	2,300	50
Maximum load ($F_{a,z}$) depends on the load capacity of the trapezium shaped roofing sheet. Before mounting, the roof load capacity has to be confirmed by a structural engineer.											

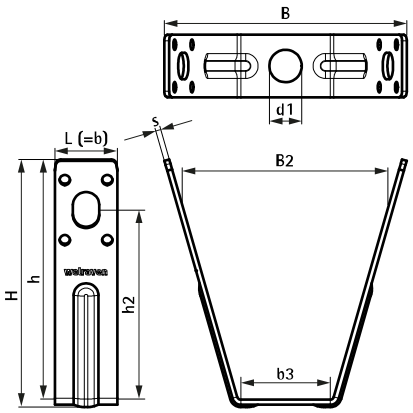

Complementary

405 BIS Hole Punching Plier

EN-SG 02/2022- Subject to modifications

BIS Stainless Steel Hanger Bolt

(M 75 05)

fixing to wall or ceiling



Features and Benefits

- material: stainless steel 1.4301 (AISI 304)

Part No.	G	L	Lh (mm)	Lm1 (mm)	PØ (mm)	Pack 1
6267805	M8	50 mm	23	27	10	100
6267808	M8	80 mm	35	35	10	100
6267810	M8	100 mm	50	40	10	100
6267812	M8	120 mm	50	40	10	100
6267816	M8	160 mm	45	50	10	50
6287006	M10	60 mm	20	40	12	100
6287008	M10	80 mm	40	40	12	100
6287012	M10	120 mm	50	40	12	50
6287016	M10	160 mm	60	50	12	50

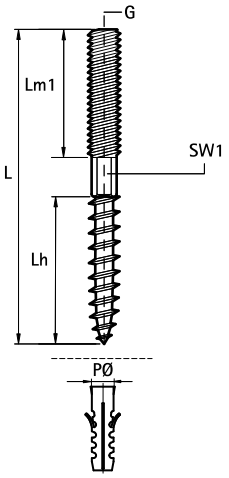

Complementary

510 BIS Star Plug

EN-SG 02/2022- Subject to modifications

BIS Stainless Steel Hexagon Head Screw

(M 80 05)



Features and Benefits

- material: stainless steel 1.4401 (AISI 316)

Part No.	Type	G	L	s (mm)	Lm1 (mm)	SW1 (mm)	Pack 1	Pack 2
6147825	DIN 933	M8	30 mm	5.0	25	13	100	-
6147840	DIN 933	M8	45 mm	5.0	40	13	100	-
6147860	DIN 933	M8	65 mm	5.0	60	13	50	200
6148025	DIN 933	M10	29 mm	4.0	25	17	100	-
6148040	DIN 933	M10	45 mm	5.0	40	17	100	-
6148060	DIN 933	M10	65 mm	5.0	60	17	50	100
6148225	DIN 933	M12	29 mm	4.0	25	19	50	100
6148240	DIN 933	M12	45 mm	5.0	40	19	50	200

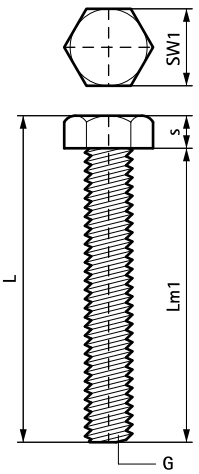

Complementary

536 BIS Stainless Steel Washer (Flat)
574 BIS Stainless Steel Hexagon Nut

BIS Stainless Steel Hexagon Nut

(M 80 10)



Features and Benefits

- material: stainless steel 1.4401 (AISI 316)

Part No.	Type	G	H (mm)	SW1 (mm)	Pack 1
6127006	DIN 934	M6	5.0	10	50
6127008	DIN 934	M8	6.5	13	50
6127010	DIN 934	M10	8.0	17	50
6127012	DIN 934	M12	10.0	19	100
6127016	DIN 934	M16	13.0	24	100
M10 and above tested for fire safety.					

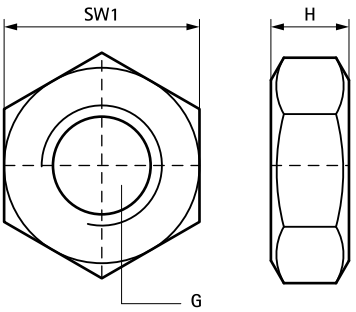

Complementary

536 BIS Stainless Steel Washer (Flat)

EN-SG 02/2022- Subject to modifications

BIS Stainless Steel Chain (DIN 5685-1)

(M 85 05)



Features and Benefits

- long link
- according to DIN 5685-1
- material: stainless steel 1.4301 (AISI 304)

Part No.	L	s (mm)	d1 (mm)	$F_{a,z}$ (N)	Pack 1
0917015	30 m	3.0	26 x 5.4	700	30
0917017	30 m	4.0	32 x 7.2	1,100	30

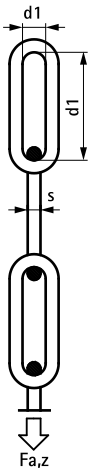

BIS Stainless Steel Stud Bolt

(M 90 03)



Features and Benefits

- according to DIN 976-1
- material: stainless steel 1.4301 (AISI 304)

Part No.	G	L	Pack 1	Pack 2
6317803	M8	30 mm	100	2,000
6317806	M8	60 mm	100	-
6317810	M8	100 mm	100	-
6317815	M8	150 mm	100	-

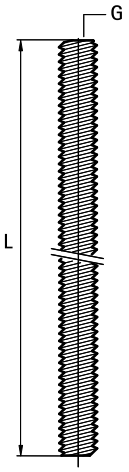

EN-SG 02/2022- Subject to modifications

BIS Stainless Steel Threaded Rod

(M 90 05)

fixing to wall or ceiling



Features and Benefits

- according to DIN 976-1
- material: stainless steel

Part No.	Type	G	L	Material	BndS
6307006	DIN 976-1	M6	1 m	1.4301 (AISI 304)	100
6307008	DIN 976-1	M8	1 m	1.4301 (AISI 304)	50
6307010	DIN 976-1	M10	1 m	1.4301 (AISI 304)	25
6307012	DIN 976-1	M12	1 m	1.4301 (AISI 304)	20
6307016	DIN 976-1	M16	1 m	1.4301 (AISI 304)	10
6307020	DIN 976-1	M20	1 m	1.4301 (AISI 304)	5

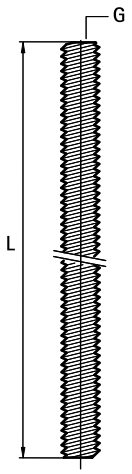

Complementary

574 BIS Stainless Steel Hexagon Nut
536 BIS Stainless Steel Washer (Flat)
578 BIS Stainless Steel Stud Connector

Complementary

580 BIS Stainless Steel Thread Adaptor
568 BIS Stainless Steel Wall Plate Resistance Welded

EN-SG 02/2022- Subject to modifications

BIS Stainless Steel Stud Connector

(M 90 10)

adjustment of thread connection



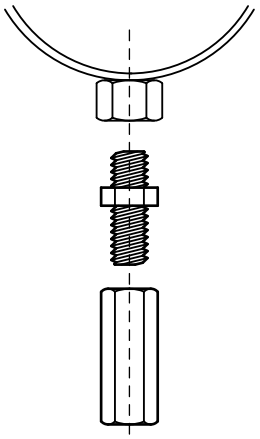

Features and Benefits

- to connect 2 male threaded components
- material: stainless steel 1.4301 (AISI 304)

Part No.	G	L	SW1 (mm)	$F_{a,z}$ (N)	Pack 1
6457625	M6	25 mm	10	11,800	100
6457830	M8	30 mm	13	21,400	100
6457930	M10	30 mm	17	27,000	50
6457240	M12	40 mm	19	30,300	50

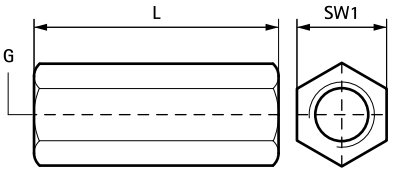

EN-SG 02/2022- Subject to modifications

BIS Stainless Steel Stud Connector

(M 90 12)



Features and Benefits

- material: stainless steel 1.4301 (AISI 304)

Part No.	G	L	$F_{a,z}$ (N)	Pack 1	Pack 2
6457831	M8	30 mm	22,300	100	2,000
6457932	M10	30 mm	-	100	2,000

EN-SG 02/2022- Subject to modifications

BIS Stainless Steel Thread Adaptor

(M 90 15)

adjustment of thread connection



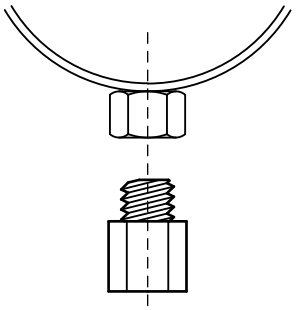

Features and Benefits

- to enlarge or reduce the thread size in the connection of clamps, etc.
- material: stainless steel 1.4401 (AISI 316)

Part No.	H (mm)	h (mm)	G1	G2	Lm1 (mm)	Lm2 (mm)	SW1 (mm)	Pack 1	Pack 2
6477210	23	15	M10	M8	9.0	6.0	13	50	500
6477308	21	13	M8	M10	7.0	6.0	13	50	500
6477416	32	22	M16	M12	11.0	8.0	24	10	100
6477512	32	18	M12	M16	10.0	11.0	19	10	100
6477421	26	11	M10	G1/2	9.0	13.0	27	50	250

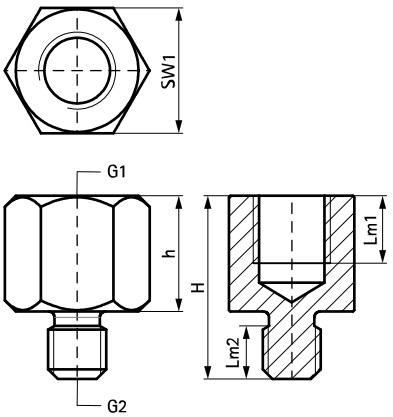

EN-SG 02/2022- Subject to modifications

WDI1 Drop-in Anchor SSt

(M 95 21)

standard stainless steel drop-in anchor



Features and Benefits

- simple and quick installation procedure
- medium load capacity
- made of stainless steel for use in external atmospheric environment
- no collar for anchor setting at greater hole depth
- material: stainless steel
- ETA ETAG001 Part 6 approval for multiple use for non-structural applications
- fire resistance class R30-R120 for design of anchorages under exposure to fire (M8-M16)
- substrate type:
  - cracked concrete
  - non-cracked concrete



Part No.	Code	Size	L	d_0 (mm)	h_0 (mm)	h_{min} (mm)	h_{nom} (mm)	Rec. Tension Load C20/25 Concrete (kN)	Pack 1	Pack 2
6103708	WDI1 SSt 8x30	M8	30 mm	10	≥ 32	80	≥ 30	0.68*	100	600
6103710	WDI1 SSt 10x40	M10	40 mm	12	≥ 42	80	≥ 40	1.09*	50	500
6103712	WDI1 SSt 12x50	M12	50 mm	15	≥ 53	100	≥ 50	1.56*	50	300
6103716	WDI1 SSt 16x65	M16	65 mm	20	≥ 70	130	≥ 65	2.81*	25	200

** Recommended loads: are stated for multiple use for non-structural applications according to ETAG001, Part 6; apply to anchors correctly installed at maximum embedment depth; include partial safety factor and an overall partial safety factor for action of 1.4.*
The partial safety factor for action depends on the type of loading and shall be taken from national regulations. All anchor failure modes and the entire relevant product European Technical Assessment must be considered for anchor design.
For more information, please refer to the ETA report.

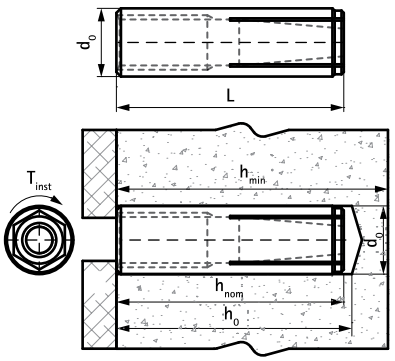

Complementary

473 WDI1 Setting Tool
488 WIS Brush
489 WIS Blow Pump

Complementary

494 WDI1 SD Stop Drill Bit
495 WSDS+ 3CE Concrete Drill Bit

WTB1 Throughbolt Anchor SSt

(M 95 22)

high performance stainless steel expansion anchor for cracked concrete



Features and Benefits

- high load capacity
- pre- and through-fixing
- made of stainless steel for use in external atmospheric environment
- two embedment depths provide installation flexibility
- material: stainless steel, A4
- ETA Option 1 approval for cracked and non-cracked concrete
- fire resistance class R30-R120 for design of anchorages under exposure to fire
- substrate type:
  - cracked concrete
  - non-cracked concrete
  - stone

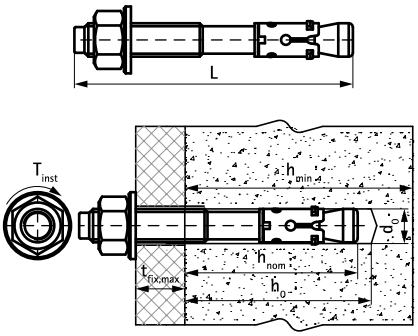

Part No.	Code	Size	L	d_0 (mm)	h_0 (mm)	h_{min} (mm)	h_{nom} (mm)	$t_{fix,max}$ (mm)	Rec. Tension Load C20/25 Uncracked Concrete (kN)	Rec. Tension Load C20/25 Cracked Concrete (kN)	Pack 1
609871080	WTB1 SSt 8x75	M8	75 mm	8	55	100	55	10	3.57*	2.38*	100
609871081	WTB1 SSt 8x115	M8	115 mm	8	55	100	55	50	3.57*	2.38*	100
609871100	WTB1 SSt 10x95	M10	95 mm	10	69	100	69	15	7.62*	4.29*	50
609871101	WTB1 SSt 10x130	M10	130 mm	10	69	100	69	50	7.62*	4.29*	50
609871120	WTB1 SSt 12x125	M12	125 mm	12	80	140	80	30	11.90*	5.71*	50
609871121	WTB1 SSt 12x150	M12	150 mm	12	80	140	80	55	11.90*	5.71*	50

** Recommended loads: are stated for single anchors; apply to anchors correctly installed at maximum embedment depth; include partial safety factor and an overall partial safety factor for action of 1.4.*
The partial safety factor for action depends on the type of loading and shall be taken from national regulations. All anchor failure modes and the entire relevant product European Technical Assessment must be considered for anchor design.
For more information, please refer to the ETA report.

Complementary

488 WIS Brush
489 WIS Blow Pump
494 WDI1 SD Stop Drill Bit

Complementary

495 WSDS+ 3CE Concrete Drill Bit

EN-SG 02/2022- Subject to modifications

WIS Threaded Rod SSt

(M 95 24)



Features and Benefits

- according to DIN 976-1
- thread with 60° angle provides best performance
- material: stainless steel 1.4401 (AISI 316)

Part No.	Code	Thread (M)	L	$A_{s,nom}$ (mm2)	BndS
63079108	WIS TR SSt M8x1000	M8	1 m	36.6	50
63079110	WIS TR SSt M10x1000	M10	1 m	58.0	25
63079112	WIS TR SSt M12x1000	M12	1 m	84.3	20
63079116	WIS TR SSt M16x1000	M16	1 m	157.0	20

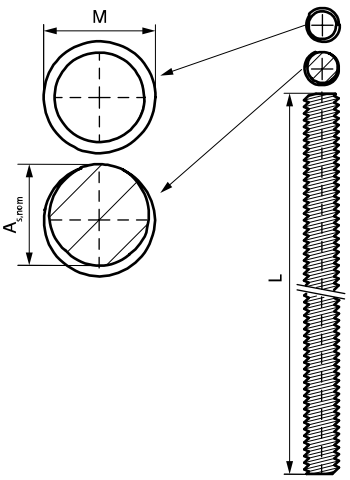

Complementary

495 WSDS+ 3CE Concrete Drill Bit
485 WIS Chemical Anchor WPSF100
486 WIS Chemical Anchor WVSF200

Complementary

533 BIS RapidRail® Stainless Steel Slide Nut
534 BIS Stainless Steel Slide Nut
574 BIS Stainless Steel Hexagon Nut

EN-SG 02/2022- Subject to modifications

BIS IKS-2000® Text Card Holder

(N 30 05)



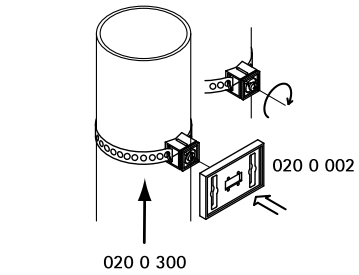

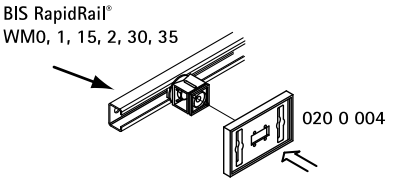

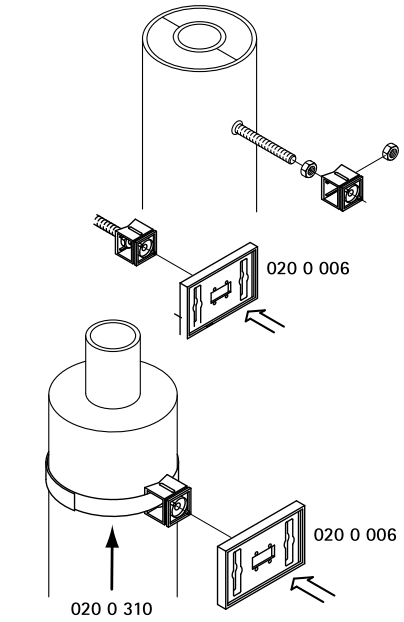

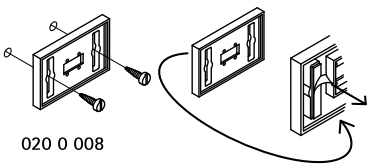

Features and Benefits

- material: mounting cube made of PA (polyamide - nylon6); text card holder made of PP (polypropylene)
- temperature resistance from -15 °C to +80 °C

Part No.	Model	Pack 1	Pack 2
0200002	With threaded connector for fixing by BIS IKS 2000® Mounting Band (Part No. 020 0 300)	10	100
0200004	With threaded connector and slide nut for fixing to BIS RapidRail® type WM0, 1, 15, 2, 30 or 35	10	250
0200006	With threaded connector for fixing to threaded rod or by BIS IKS-2000® Velcro (Part No. 020 0 310)	10	250
0200008	Self-adhesive or for fixing on walls using screws	10	100
0200032	Universal holder with transparent cover plate	250	-
0200040	Transparent cover plate	250	-

Complementary

585 BIS IKS-2000® Mounting Band
586 BIS IKS-2000® Velcro

EN-SG 02/2022- Subject to modifications

BIS IKS-2000® Mounting Band

(N 30 10)



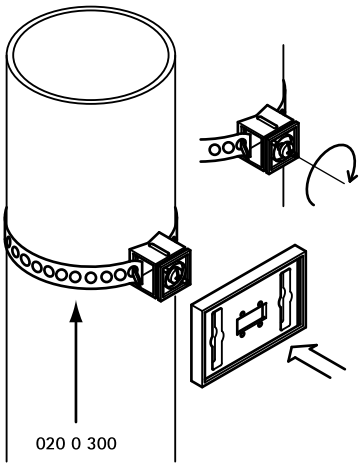

Features and Benefits

- for fastening of IKS Text Card Holders
- material: stainless steel 1.4404 (AISI 316L)

Part No.	L	Pack 1	Pack 2	App.
0200300	20 m	1	10	roll

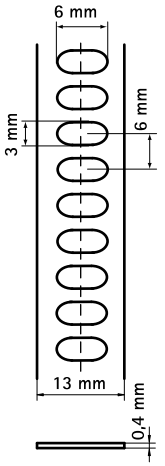

BIS IKS-2000® Velcro

(N 30 15)



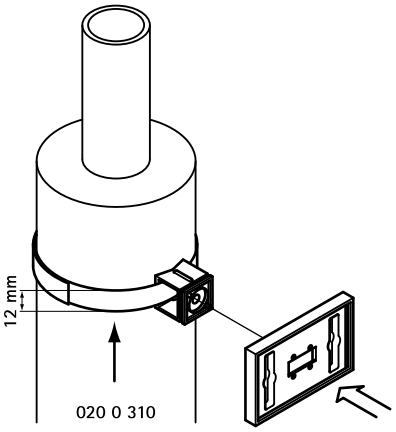

Features and Benefits

- for fastening of IKS Text Card Holders

Part No.	L	b (mm)	Pack 1	Pack 2	App.
0200310	25 m	12	1	48	roll

EN-SG 02/2022- Subject to modifications

BIS IKS 2000® Text Card (DIN 2403)

(N 35 05)

identification of pipes



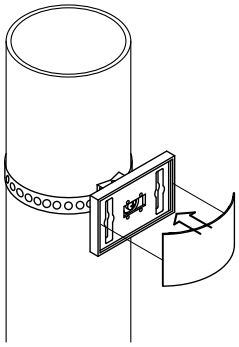

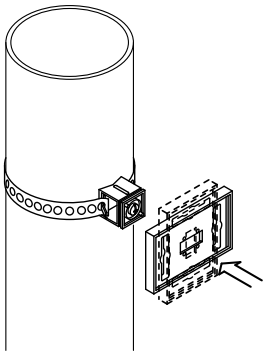

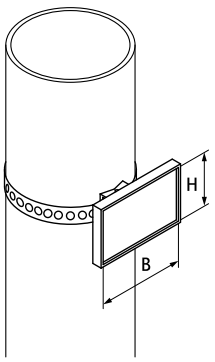

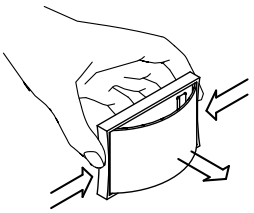

Features and Benefits

- text card colours according to DIN 2403
- various printing possibilities (full-colours, logo, symbols, barcode, etc.)
- full-colour only on white text card
- Part No. 020 0 02X: printing (1 colour or full-colour)
- material: hard PVC (polyvinylchloride)
- resistant to UV, ozone and chemicals
- resistant to scratches, washable

Part No.	B (mm)	H (mm)	Colour	Medium	Pack 1	Pack 2
0200101	86	54	White	-	1	250
0200102	86	54	Green	water	1	500
0200103	86	54	Blue	oxygen	1	500
0200104	86	54	Red	steam	1	500
0200105	86	54	Grey	air	1	500
0200106	86	54	Yellow	flammable gasses	1	500
0200112	86	54	Transparent	-	1	100
0200021	-	-	1-colour	-	1	-
0200024	-	-	Full-colour	-	1	-

Complementary

584 BIS IKS-2000® Text Card Holder

BIS Manifold Fixing

(O 05 05)

fixing for manifold-units Ø 3/4 - 1.1/2" (26,9 - 48,3 mm)



Features and Benefits

- material: steel
- zinc plated
- sound proofing lining made of natural rubber, black
- sound insulating lining according DIN 4109

Part No.	D (mm)	D (")	Model	Pack 1
3944001	26.9	¾	Single	50
3944002	34.0	1	Single	50
3944007	48.3	1½	Single	40
3944021	26.9	¾	Double	25
3943227	26.9	¾	Double	25
3944027	48.3	1½	Double	25
Other types on request.				

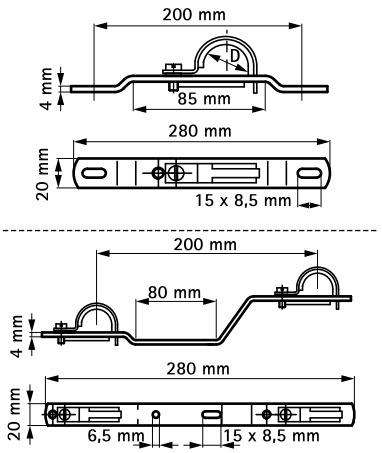

EN-SG 02/2022- Subject to modifications

BIS Shouldered Masonry Nail

(O 15 10)

for floor clamps



690 0 000



633 0 018

Features and Benefits

- Part No. 6330018: can be hammered into concrete without pre-drilling a hole
- Part No. 6900000: with hand protection and ergonomic hand grip
- Part No. 6330018: material: steel 1.1740, tempered

Part No.	Model	Pack 1	Pack 2
6330018	BIS Shouldered Masonry Nail	100	3,000
6900000	BIS Hammer-in tool	1	-

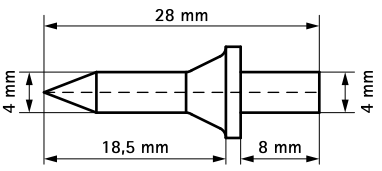

633 0 018

BIS Plug Clamp

(O 15 15)

for floor pipe 28 mm





Features and Benefits

- to fix pipe-in-pipe pipes before casting top floor layer
- material: PA (polyamide), green

Part No.	D (mm)	Model	B (mm)	H (mm)	Pack 1	Pack 2
0852050	28	Single	45	75	100	1,000
0852080	28	Single	45	115	50	1,000
0852013	28	Single	42	135	50	-
0852250	28	Double	80	75	50	500
0852280	28	Double	80	115	50	500
0852213	28	Double	76	135	50	-

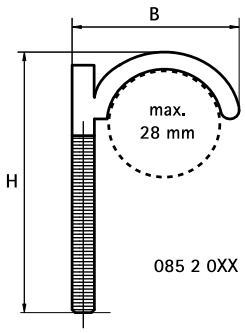

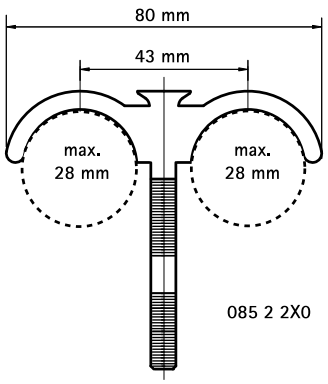



EN-SG 02/2022- Subject to modifications

BIS Tacker System

(0 15 20)

for floor pipe Ø 14 - 20 mm



Features and Benefits

- the BIS Tacker system consists of wide and stable clamps and a problem free tacker device
- Part No. 693 0 001: Tacker device for a quick processing of tacker clamps (KA8 and KAL)
- Part No. 0870141 (type KA8): for insulating plates from 25 mm thickness with foil
- Part No. 0870158 (type KAL): for insulating plates from 40 mm thickness without foil (e.g. Styrodur®, Styropor®)
- for floor pipe up to Ø 20 mm
- Part No. 6930001: Tacker device for a quick processing of tacker clamps (KA8 and KAL)
- by means of self-adhesive tape attached together per 20 pieces
- material: PP (polypropylene), black

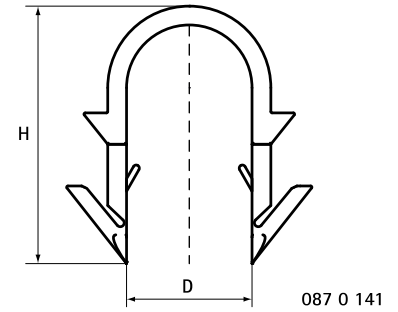

087 0 141

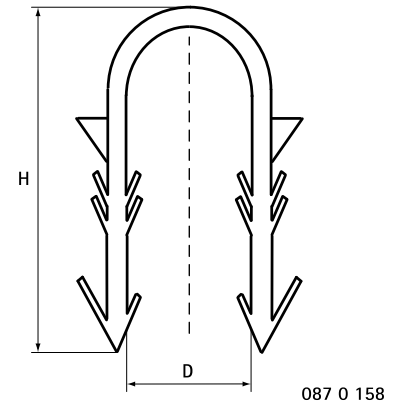

087 0 158

Part No.	D (mm)	Model	Type	H (mm)	Pack 1	Pack 2
6930001	0.0	Tacker	KA	-	1	-

Rapid Sliding Wall Bracket (RSWB)

(02 05 200)





Features and Benefits

- extendable in-wall bracket for mounting plumbing pipes, electrical pipes, electrical boxes and conduit between studs
- suitable for use in metal or wood stud walls and floor joists
- quicker and easier to install than traditional methods - no measuring or cutting
- can be set at multiple depths
- for use with RapidRail® Slide Nuts, starQuick® Clamps, starQuick® Universal Rail Adapter and RapidRail® Hammerfix accessories
- break apart design (sold in connected pairs)
- material: steel 1.0226
- hot dip galvanized

Part No.	Model	Type	Pack 1
59491220	12 - 20"	RSWB3	50
59491827	16 - 26"	RSWB4	25

EN-SG 02/2022- Subject to modifications

Light Angled Wall Bracket (LAWB)

(02 05 204)





Features and Benefits

- used to support vertical piping and horizontal stub-outs within the wall
- bracket mounts at 4 points for added strength, stability and durability
- adjustable for ease of use with studs that are not exactly on center
- hole pattern allows for adjustable stub-outs every 2" +or- 1/2"
- material: steel 1.0242
- hot dip galvanized
- packaged in convenient resealable tube

Part No.	Model	Type	Pack 1
59493001	12 - 20"	LAWB1	25
59493002	18 - 26"	LAWB2	25

Heavy Angled Wall Bracket (HAWB)

(02 05 208)





Features and Benefits

- used to support vertical piping and horizontal stub-outs within the wall
- bracket mounts at 4 points for added strength, stability and durability
- adjustable for ease of use with studs that are not exactly on center
- hole pattern allows for adjustable stub-outs every 2" +or- 1/2"
- material: steel 1.0242
- packaged in convenient resealable tube

Part No.	Model	Type	Pack 1
59494001	12 - 20"	HAWB1	25
59494002	18 - 26"	HAWB2	25

Multi-Purpose Telescoping Support (MPTS)

(02 05 212)



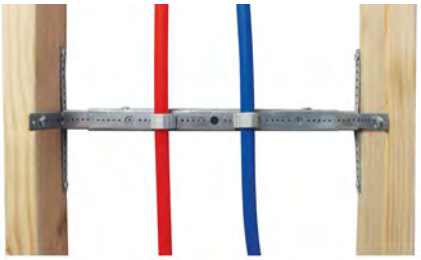

Features and Benefits

- this heavy-duty, adjustable, 3 piece bracket is used to support vertical piping and stub-outs on studs at 6 points
- adjustable for ease of use
- heavy duty profile supports any in-wall hardware
- hole pattern fits sliding and fixed stub-outs as well as a variety of clamps
- material: steel 1.0242
- pre-galvanized

Part No.	Model	Type	Pack 1
59492001	12 - 20"	MPTS1	25
59492002	18 - 26"	MPTS2	25

Multi-Purpose Telescoping Support (MPTS) Insert

(02 05 216)



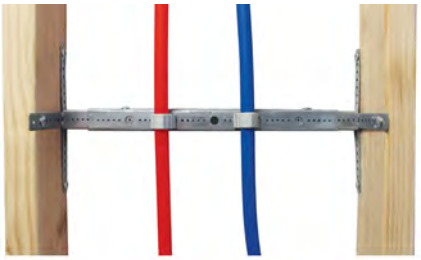

Features and Benefits

- can be used to make a custom length in-wall bracket when paired with WM0 strut
- can be used as a cantilever or to attach strut in between walls
- features 3 fixing points to support any length of WM0 strut
- easily customizable
- use to attach custom size WM0 strut in a narrow, confined space
- material: steel 1.0242
- pre-galvanized

Part No.	Pack 1	App.
59492000	50	pc.

EN-SG 02/2022- Subject to modifications

Plate for Adjustable Shower Valve

(02 05 228)





Features and Benefits

- conveniently fits on the Universal Shower Valve Plate
- allows for Universal Shower Valve Plate to be repositioned once valve is attached
- easy to install
- material: steel 1.0332
- zinc plated
- square nut and 1/4" x 1/2" machine screw

Part No.	Pack 1
59490990	50

Rapid Sliding Wall Bracket (RSWB)

PEX 1/2" Stub-Out Kit

(02 05 232)





Features and Benefits

- easy to adjust and close using hands or drill
- pre-assembled and ready to use with PEX pipe
- individually bagged for convenience

Part No.	Cont.	Pack 1
59490970	RSWB3, spans from 12" to 20", 1 stub-out brackets, hardware	25
59490971	RSWB3, spans from 12" to 20", 2 stub-out brackets, hardware	25
59490972	RSWB4, spans from 16" to 26", 2 stub-out brackets, hardware	25

Complementary

603 PEX Stub-Out Clamp
601 Heavy Angled Wall Bracket (HAWB)

EN-SG 02/2022- Subject to modifications

Light Angled Wall Bracket (LAWB)
Double PEX 1/2" Stub-Out Kit

(02 05 238)



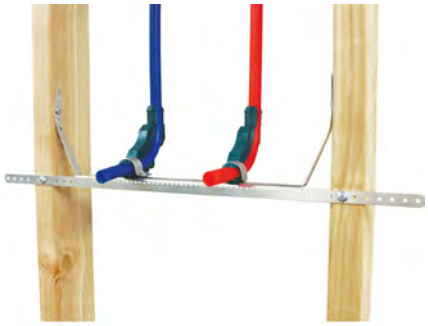

Features and Benefits

- hole pattern allows for adjustable stub-outs every 2" +or- 1/2"
- adjustable to accommodate different stud spacing
- a light duty bracket with PEX bends and clamps for stub-outs
- hardware included

Part No.	Cont.	Pack 1
59496111	LAWB1, spans from 12" to 20", 2 stub-out brackets, hardware	25
59496112	LAWB2, spans from 18" to 26", 2 stub-out brackets, hardware	25

Light Angled Wall Bracket (LAWB)

Double CPVC or Copper Pipe 1/2" Stub-Out Kit

(02 05 241)





Features and Benefits

- adjustable to accommodate different stud spacing
- a light duty bracket with rubber inserts and clamps for use with CPVC or copper pipe stub-outs
- hole pattern for stub-outs is every 2" with adjustability of +or- 1/2"
- hardware included

Part No.	Cont.	Pack 1
59496211	LAWB1, spans from 12" to 20", 2 stub-out brackets, hardware	25
59496212	LAWB2, spans from 18" to 26", 2 stub-out brackets, hardware	25

EN-SG 02/2022- Subject to modifications

Heavy Angled Wall Bracket (HAWB)

(02 05 245)



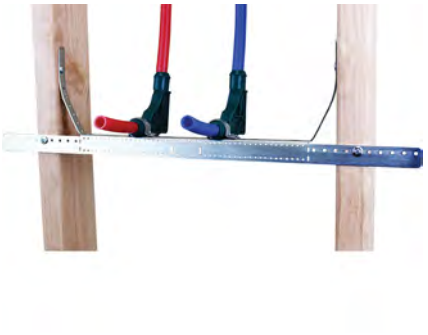

Features and Benefits

- adjustable to accommodate different stud spacing
- a heavy duty bracket with PEX bends and clamps for stub-outs
- hole pattern for stub-outs is every 2" with adjustability of +or- 1/2"
- hardware included

Part No.	Cont.	Pack 1
59495111	HAWB1, spans from 12" to 20", 2 stub-out brackets, hardware	25
59495112	HAWB2, spans from 18" to 26", 2 stub-out brackets, hardware	25

Heavy Angled Wall Bracket (HAWB)

Double CPVC or Copper Pipe 1/2" Stub-Out Kit

(02 05 248)



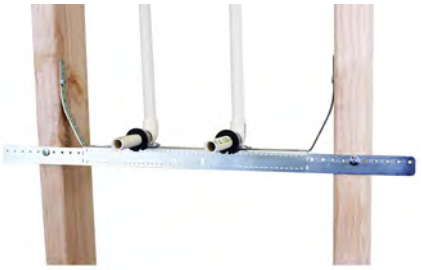

Features and Benefits

- adjustable to accommodate different stud spacing
- a heavy duty bracket with rubber inserts and clamps for use with CPVC or copper pipe stub-outs
- hole pattern for stub-outs is every 2" with adjustability of +or- 1/2"
- hardware included

Part No.	Cont.	Pack 1
59495211	HAWB1, spans from 12" to 20", 2 stub-out brackets, hardware	25
59495212	HAWB2, spans from 18" to 26", 2 stub-out brackets, hardware	25

EN-SG 02/2022- Subject to modifications

PEX Stub-Out Clamp
for Rapid Sliding Wall Bracket (RSWB)

(02 05 255)



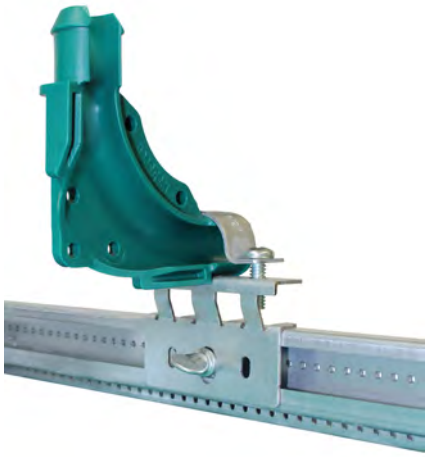

Features and Benefits

- for use with PEX tubing
- features a thumb screw and square nut for easy adjustability
- a secure way to support PEX stub-outs
- easily mounts to the Multi-Purpose Telescoping Support (MPTS)
- pre-assembled for quick installation

Part No.	Pack 1
59497112	25

CPVC or Copper Pipe Stub-Out Clamp
for Rapid Sliding Wall Bracket (RSWB)

(02 05 259)



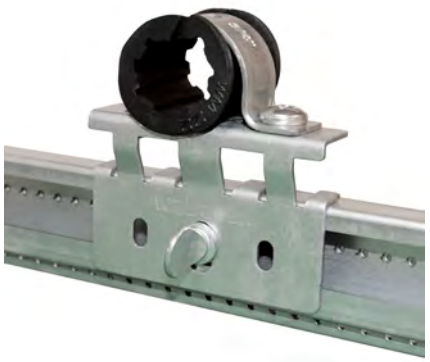

Features and Benefits

- easily mounts to the Multi-Purpose Telescoping Support (MPTS)
- for use with CPVC or copper pipe
- features a thumb screw for easy adjustability
- a secure way to support CPVC or copper pipe stub-outs
- pre-assembled for quick installation

Part No.	Pack 1
59497212	25

EN-SG 02/2022- Subject to modifications

PEX 90° Bend Support

(02 05 270)





Features and Benefits

- Easily snap-in your PEX tubing instead of having to slide it in
- conveniently fits stub-out assemblies
- creates a secure and kink-free bend radius for 1/2" PEX tubing
- versatile - suitable for many types of installations

Part No.	Pack 1
59490973	25

Flush Valve Support 1"

(02 05 274)





Features and Benefits

- supports the 1" line from toilet carrier to wall
- rubber lined support reduces vibration and noise
- adjustable both horizontally and vertically
- pipe is secured using two captured screws
- material: steel 1.0226
- hot dip galvanized

Part No.	Pack 1
59499982	10

EN-SG 02/2022- Subject to modifications

BIS Twinlok® Test Plug

(P 16 05)

temperature, pressure and flow measurements



Features and Benefits

- for temperature, pressure and flow measurements
- ¼" BSPT Thread
- max. pressure 500 P.S.I. (35 bar)
- EPDM core
- max. temperature 135 °C

Part No.	Model	Pack 1	Pack 2
0634000	Test Plug, brass	10	100
0634001	Test Plug, brass, extended	5	50
0634009	Test Plug, stainless steel	10	100

Note: The use of Silicone oil is recommended as a lubricant when inserting probes, to avoid possible damage to the Twinlok® Test Plug core.

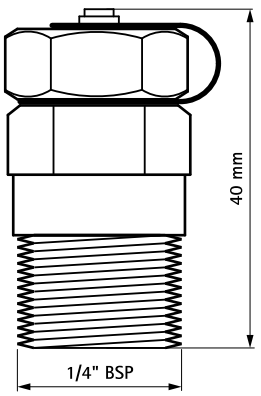

EN-SG 02/2022- Subject to modifications

Pressure and Temperature Gauge

(P 16 10)

temperature, pressure and flow measurements



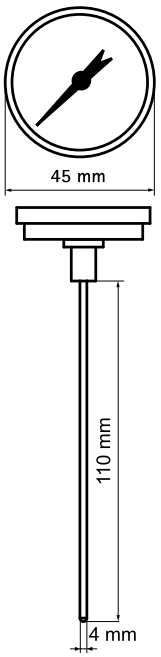

Features and Benefits

- calibrated in P.S.I. and Bar
- liquid filled gauges also available

Part No.	Model	Type	Pack 1
0634533	Pressure gauge adaptor probe	1/4" BSP	1

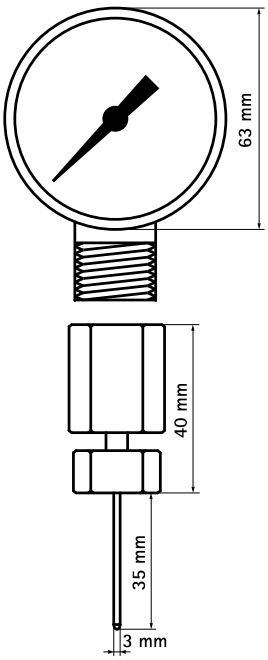

EN-SG 02/2022- Subject to modifications

CS P1 PU Foam Gun

(U 08 65)

to apply fire resistant sealant



Features and Benefits

- easy to handle, good dosing
- for applying Tangit FP 100 Fire Protection 1C Foam

Part No.	Model	Cont.	Pack 1
2181111	CS P1 PU Foam Gun	-	1

Technical Information / Indexes

Technical Information / Indexes	611
Information: Steel Pipes	612
Information: Steel Pipes / Cast Iron Pipe	613
Information: Copper Pipe / PE-Pipe	614
Information: PE-Pipe / PVC-Pipe	615
Information: PVC-Pipe	616
Information: Air Ducts (Non-Insulated)	617
Information: Air Ducts (Insulated)	618
Information: Material Properties Plastics	619
Information: Surface Treatment	620
Information: Surface Treatment (cont.)	621
Information: Thermal Expansion	622
Part number Index (000 - 091)	623
Part number Index (091 - 320)	624
Part number Index (320 - 336)	625
Part number Index (336 - 438)	626
Part number Index (438 - 594)	627
Part number Index (594 - 617)	628
Part number Index (617 - 650)	629
Part number Index (650 - 658)	630
Part number Index (658 - 671)	631
Part number Index (672 - 999)	632
Type Index (0 - 9 / A - K)	633
Type Index (L - Z)	634
Alphabetical Index (Aaa - But)	635
Alphabetical Index (Cab - CP)	636
Alphabetical Index (Cro - Foa)	637
Alphabetical Index (Foo - Pig)	638
Alphabetical Index (Pip - Rap)	639
Alphabetical Index (Rap - Sli)	640
Alphabetical Index (Sli - Str)	641
Alphabetical Index (Str - U-w)	642
Alphabetical Index (U-w - WVS)	643
Alphabetical Index (X-C - Zzz)	644

EN-SG 02/2022- Subject to modifications

Information: Steel Pipes

Steel pipe suitable for screwing				Weight			L
D			s	empty	filled	insulated	(max.)*
(mm)	(")	(DN)	(mm)	(kg / m)	(kg / m)	(kg / m)	m
10.2	1/8	6	2.00	0.41	0.44	0.59	1.25
13.5	1/4	8	2.35	0.65	0.71	0.88	1.50
17.2	3/8	10	2.35	0.85	0.97	1.17	2.25
21.3	1/2	15	2.65	1.22	1.42	1.63	2.75
26.9	3/4	20	2.65	1.58	1.95	2.20	3.00
33.7	1	25	3.25	2.44	3.02	3.51	3.50
42.4	1 1/4	32	3.25	3.14	4.15	4.86	3.75
48.3	1 1/2	40	3.25	3.61	4.98	5.94	4.25
60.3	2	50	3.65	5.10	7.31	8.83	4.75
76.1	2 1/2	65	3.65	6.51	10.23	12.77	5.50
88.9	3	80	4.05	8.47	13.59	17.08	6.00
114.3	4	100	4.50	12.10	20.80	26.31	6.00
139.7	5	125	4.85	16.20	29.47	35.45	6.00
165.1	6	150	4.85	19.20	38.16	44.83	6.00

Norm:
DIN EN 10255 - 11/2004

Material:
Steel 33-2, according to DIN 17100

Insulation:
mineral wool (density = 80 kg/m³)

Steel pipe (seamless)				Weight			L
D			s	empty	filled	insulated	(max.)*
(mm)	(")	(DN)	(mm)	(kg / m)	(kg / m)	(kg / m)	m
10.2	1/8	6	1.6	0.34	0.38	0.53	1.25
13.5	1/4	8	1.8	0.52	0.60	0.77	1.50
17.2	3/8	10	1.8	0.68	0.83	1.02	2.25
21.3	1/2	15	2.0	0.96	1.19	1.40	2.75
26.9	3/4	20	2.3	1.40	1.79	2.22	3.00
33.7	1	25	2.6	1.99	2.63	3.12	3.50
42.4	1 1/4	32	2.6	2.55	3.64	4.39	3.75
48.3	1 1/2	40	2.6	2.93	4.39	5.39	4.25
60.3	2	50	2.9	4.11	6.44	8.03	4.75
76.1	2 1/2	65	2.9	5.24	9.12	11.70	5.50
88.9	3	80	3.2	6.76	12.10	15.72	6.00
114.3	4	100	3.6	9.83	18.83	24.25	6.00
139.7	5	125	4.0	13.40	27.02	33.05	6.00
168.3	6	150	4.5	18.20	38.37	43.66	6.00
219.1	8	200	6.3	33.10	67.75	72.95	6.00
273.0	10	250	6.3	41.40	96.11	104.15	6.00
323.9	12	300	7.1	55.50	131.57	141.56	6.00
355.6	14	350	8.0	68.60	160.95	170.74	6.00
406.4	16	400	8.8	86.30	207.05	217.91	6.00
457.0	18	450	10.0	110.00	262.67	274.44	6.00
508.0	20	500	11.0	135.00	323.79	335.87	6.00
610.0	24	600	12.5	184.00	457.26	471.16	6.00

Norm:
DIN EN 10220 - 03/2003

Material:
Steel 37

Insulation:
mineral wool (density = 80 kg/m³)

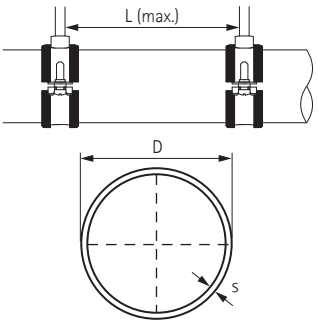

This datasheet is to be used as a tool for selecting the correct fixing materials only. Although Walraven does everything possible to ensure the accuracy of all data within this sheet, we cannot be held responsible for information supplied by third parties, i.e. standardisation institutes and pipe manufacturers.
* Maximum recommended fixing distance according to DIN 1988-2 (TRWI). The exact distances depend on the specific pipe-type and -manufacturer!

EN-SG 02/2022- Subject to modifications

Information: Steel Pipes / Cast Iron Pipe

Welded steel pipe				Weight			L
D			s	empty	filled	insulated	(max.)*
(mm)	(")	(DN)	(mm)	(kg / m)	(kg / m)	(kg / m)	m
10.2	1/8	6	1.6	0.34	0.38	0.53	1.25
13.5	1/4	8	1.8	0.52	0.60	0.77	1.50
17.2	3/8	10	1.8	0.68	0.83	1.02	2.25
21.3	1/2	15	2.0	0.95	1.19	1.40	2.75
26.9	3/4	20	2.0	1.23	1.64	2.07	3.00
33.7	1	25	2.0	1.56	2.25	2.74	3.50
42.4	1 1/4	32	2.3	2.27	3.39	4.17	3.75
48.3	1 1/2	40	2.3	2.61	4.11	5.13	4.25
60.3	2	50	2.3	3.29	5.73	7.38	4.75
76.1	2 1/2	65	2.6	4.71	8.66	11.29	5.50
88.9	3	80	2.9	6.15	11.57	15.17	6.00
114.3	4	100	3.2	8.77	17.91	23.31	6.00
139.7	5	125	3.6	12.10	25.88	31.92	6.00
168.3	6	150	4.0	16.20	36.57	43.16	6.00
219.1	8	200	4.5	23.80	58.78	66.55	6.00
273.0	10	250	5.0	33.00	88.13	96.81	6.00
323.9	12	300	5.6	44.00	121.84	131.49	6.00
355.6	14	350	5.6	48.30	142.06	153.04	6.00
406.4	16	400	6.3	62.20	184.80	196.81	6.00
457.0	18	450	6.3	70.00	226.01	239.27	6.00
508.0	20	500	6.3	77.90	270.56	286.13	6.00

Norm:
DIN EN 10220 - 03/2003

Material:
Steel 37-2

Insulation:
mineral wool (density = 80 kg/m³)

Cast iron pipe				Weight			L
D			s	empty	filled	insulated	(max.)*
(mm)	Tol. (mm)	(DN)	(mm)	(kg / m)	(kg / m)	(kg / m)	m
48		40	3.0	3.10	4.48	-	2.00
58		50	3.5	4.30	6.34	-	2.00
78	+2.0 / -1.0	70	3.5	5.90	9.86	-	2.00
83		75	3.5	6.30	10.83	-	2.00
110		100	3.5	8.40	16.73	-	1.50
135		125	4.0	11.80	24.46	-	1.50
160	+2.0 / -2.0	150	4.0	14.10	32.24	-	1.50
210		200	5.0	23.10	54.50	-	1.50
274	+2.5 / -2.5	250	5.5	33.30	87.60	-	1.50
326		300	6.0	43.20	120.60	-	1.50
429	+2.0 / -3.0	400	8.1	77.65	211.49	-	1.50
532	+2.0 / -3.5	500	9.0	107.21	314.71	-	1.50
635	+2.0 / -4.0	600	9.9	140.95	438.20	-	1.50

Norm:
DIN 19522 - 01/2000

Material:
Cast iron according to ISO 185 (EN 587)

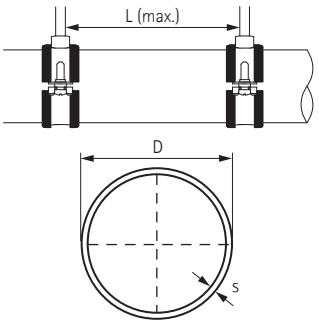

This datasheet is to be used as a tool for selecting the correct fixing materials only. Although Walraven does everything possible to ensure the accuracy of all data within this sheet, we cannot be held responsible for information supplied by third parties, i.e. standardisation institutes and pipe manufacturers.
* Maximum recommended fixing distance according to DIN 1988-2 (TRWI). The exact distances depend on the specific pipe-type and -manufacturer!

Information: Copper Pipe / PE-Pipe

Copper pipe				Weight			L
D			s	empty	filled	insulated	(max.)*
(mm)	(")	(DN)	(mm)	(kg / m)	(kg / m)	(kg / m)	m
10.0	-	-	1.0	0.25	0.30	0.45	1.00
12.0	-	10	1.0	0.31	0.39	0.55	1.25
15.0	-	-	1.0	0.39	0.52	0.70	1.25
18.0	-	15	1.0	0.48	0.68	0.87	1.50
22.0	-	20	1.0	0.59	0.90	1.11	2.00
28.0	-	25	1.5	1.11	1.60	2.05	2.25
35.0	-	32	1.5	1.41	2.21	2.70	2.75
42.0	-	40	1.5	1.70	2.89	3.69	3.00
54.0	-	50	2.0	2.91	4.87	6.19	3.50
64.0	-	-	2.0	3.47	6.29	8.19	4.00
76.1	-	65	2.0	4.14	8.22	10.93	4.25
88.9	-	80	2.0	4.86	10.52	14.26	4.75
108.0	-	-	2.5	7.37	15.70	20.98	5.00
133.0	-	-	3.0	10.90	23.57	29.50	5.00
159.0	-	-	3.0	13.09	31.46	38.06	5.00
219.0	-	-	3.0	18.12	53.73	61.87	5.00
267.0	-	-	3.0	22.10	75.60	-	5.00

Norm:
EN 1057 - 05/1996 (ex. DIN 1786)

Material:
Copper according to EN 1412

Insulation:
mineral wool (density = 80 kg/m³)

PE pipe				Weight			L
D			s	empty	filled	insulated	(max.)*
(mm)	(")	(DN)	(mm)	(kg / m)	(kg / m)	(kg / m)	m
50	-	-	1.8	0.29	1.98	-	1.05
63	-	-	2.0	0.40	3.13	-	1.20
75	-	-	2.3	0.55	4.44	-	1.30
90	-	-	2.8	0.79	6.38	-	1.45
110	-	-	3.4	1.17	9.53	-	1.60
125	-	-	3.9	1.51	12.29	-	1.70
140	-	-	4.3	1.88	15.43	-	1.80
160	-	-	4.9	2.42	19.13	-	1.90
180	-	-	5.5	3.07	25.49	-	2.00
200	-	-	6.2	3.84	31.47	-	2.00
225	-	-	6.9	4.77	39.79	-	2.25
250	-	-	7.7	5.92	49.12	-	2.50
280	-	-	8.6	7.40	61.64	-	2.80
315	-	-	9.7	9.37	77.96	-	3.15

Norm:
DIN 8074 - 08/1999

Series: 16

SDR: 33

Material:
HD PE

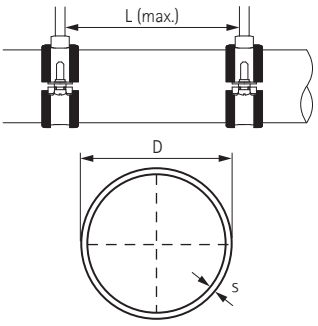

This datasheet is to be used as a tool for selecting the correct fixing materials only. Although Walraven does everything possible to ensure the accuracy of all data within this sheet, we cannot be held responsible for information supplied by third parties, i.e. standardisation institutes and pipe manufacturers.
* Maximum recommended fixing distance according to DIN 1988-2 (TRWI). The exact distances depend on the specific pipe-type and -manufacturer!

EN-SG 02/2022- Subject to modifications

Information: PE-Pipe / PVC-Pipe

PE pipe				Weight			L
D			s	empty	filled	insulated	(max.)*
(mm)	(")	(DN)	(mm)	(kg / m)	(kg / m)	(kg / m)	m
40	-	-	1.8	0.23	1.27	-	0.95
50	-	-	2.0	0.31	1.98	-	1.05
63	-	-	2.5	0.49	3.13	-	1.20
75	-	-	2.9	0.68	4.43	-	1.30
90	-	-	3.5	0.98	6.39	-	1.45
110	-	-	4.2	1.43	9.53	-	1.60
125	-	-	4.8	1.84	12.29	-	1.70
140	-	-	5.4	2.32	15.42	-	1.80
160	-	-	6.2	3.04	20.14	-	1.90
180	-	-	6.9	3.79	25.47	-	2.00
200	-	-	7.7	4.69	31.44	-	2.00
225	-	-	8.6	5.89	39.79	-	2.25
250	-	-	9.6	7.30	49.12	-	2.50
280	-	-	10.7	9.10	61.60	-	2.80
315	-	-	12.1	11.60	77.98	-	3.00

Norm:
DIN 8074 - 08/1999

Series:
12,5

SDR:
26

Material:
HD PE

PVC pipe				Weight			L
D			s	empty	filled	insulated	(max.)*
(mm)	(")	(DN)	(mm)	(kg / m)	(kg / m)	(kg / m)	m
40	-	-	1.8	0.33	1.37	-	0.90
50	-	-	1.8	0.42	2.11	-	1.10
63	-	-	1.9	0.56	3.31	-	1.20
75	-	-	2.2	0.78	4.69	-	1.35
90	-	-	2.7	1.13	6.75	-	1.50
110	-	-	3.2	1.64	10.07	-	1.70
125	-	-	3.7	2.13	12.99	-	1.80
140	-	-	4.1	2.65	16.29	-	1.95
160	-	-	4.7	3.44	21.24	-	2.10
180	-	-	5.3	4.37	26.90	-	2.20
200	-	-	5.9	5.37	33.17	-	2.30
225	-	-	6.6	6.76	41.97	-	2.40
250	-	-	7.3	8.31	51.81	-	2.50
280	-	-	8.2	10.40	64.95	-	2.80
315	-	-	9.2	13.20	82.26	-	3.00

Norm:
DIN 8062 - 11/1988

Series:
3

SDR:
34,3

Material:
PVC-U (unplasticized)

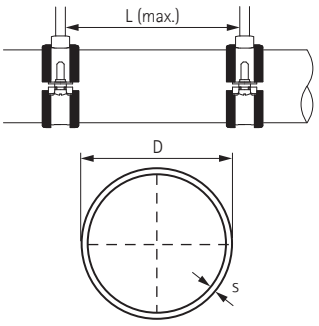

This datasheet is to be used as a tool for selecting the correct fixing materials only. Although Walraven does everything possible to ensure the accuracy of all data within this sheet, we cannot be held responsible for information supplied by third parties, i.e. standardisation institutes and pipe manufacturers.
* Maximum recommended fixing distance according to DIN 1988-2 (TRWI). The exact distances depend on the specific pipe-type and -manufacturer!

Information: PVC-Pipe

PVC pipe				Weight			L
D			s	empty	filled	insulated	(max.)*
(mm)	(")	(DN)	(mm)	(kg / m)	(kg / m)	(kg / m)	m
25	-	-	1.5	0.17	0.55	-	0.65
32	-	-	1.8	0.26	0.90	-	0.70
40	-	-	1.9	0.35	1.38	-	0.90
50	-	-	2.4	0.55	2.16	-	1.10
63	-	-	3.0	0.85	3.40	-	1.20
75	-	-	3.6	1.22	4.83	-	1.35
90	-	-	4.3	1.75	6.95	-	1.50
110	-	-	5.3	2.61	10.37	-	1.70
125	-	-	6.0	3.34	13.36	-	1.80
140	-	-	6.7	4.18	16.76	-	1.95
160	-	-	7.7	5.47	21.88	-	2.10
180	-	-	8.6	6.88	27.69	-	2.20
200	-	-	9.6	8.51	34.17	-	2.30
225	-	-	10.8	10.80	43.28	-	2.40
250	-	-	11.9	13.20	53.37	-	2.50
280	-	-	13.4	16.60	66.93	-	2.80
315	-	-	15.0	20.90	84.66	-	3.00

Norm:
DIN 8062 - 11/1988

Series:
4

SDR:
21

Material:
PVC-U (unplasticized)

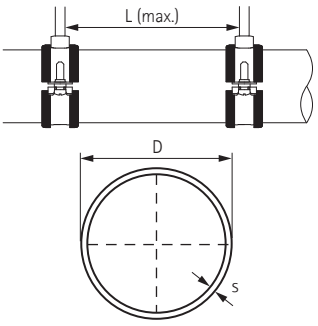

This datasheet is to be used as a tool for selecting the correct fixing materials only. Although Walraven does everything possible to ensure the accuracy of all data within this sheet, we cannot be held responsible for information supplied by third parties, i.e. standardisation institutes and pipe manufacturers.
* Maximum recommended fixing distance according to DIN 1988-2 (TRWI). The exact distances depend on the specific pipe-type and -manufacturer!

EN-SG 02/2022- Subject to modifications

Information: Air Ducts (Non-Insulated)

Declaration of weight in kg/m

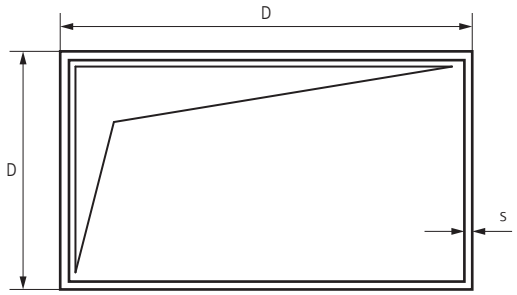

D	s = 0.75 mm			s = 0.88 mm						D
(mm)	200	224	250	280	315	355	400	450	500	(mm)
200	6.1	6.5	6.9	8.6	9.2	10.0	10.8	11.7	12.6	200
224	-	6.9	7.3	9.1	9.7	10.4	11.2	12.1	13.0	224
250	-	-	7.7	9.5	10.1	10.9	11.7	12.6	13.5	250
280	-	-	-	10.1	10.7	11.4	12.2	13.1	14.0	280
315	-	-	-	-	11.3	12.0	12.8	13.7	14.6	315
355	-	-	-	-	-	12.8	13.6	14.5	15.4	355
400	-	-	-	-	-	-	14.4	15.3	16.2	400
450	-	-	-	-	-	-	-	16.2	17.1	450
500	-	-	-	-	-	-	-	-	18.0	500

Values for the calculation:
Density air duct: Steel plate zp. = 7,850 kg/m³

Weights for flanges and duct bracing were estimated.

D	s = 1.00 mm						s = 1.13 mm						s = 1.5 mm				D
(mm)	560	630	710	800	900	1,000	1,120	1,250	1,400	1,600	1,800	2,000	2,240	2,500	2,800	3,150	(mm)
200	15.5	16.9	18.6	20.4	22.5	24.5	30.4	33.4	36.9	41.5	46.1	50.7	62.3	68.9	76.5	85.5	200
224	16.0	17.4	19.1	20.9	22.9	25.0	31.0	34.0	37.5	42.1	46.7	51.3	62.9	69.5	77.1	86.1	224
250	16.5	18.0	19.6	21.4	23.5	25.5	31.6	34.6	38.1	42.7	47.3	51.9	63.5	70.2	77.8	86.7	250
280	17.1	18.6	20.2	22.0	24.1	26.1	32.3	35.3	38.7	43.4	48.0	52.6	64.3	70.9	78.6	87.5	280
315	17.9	19.3	20.9	22.8	24.8	26.8	33.1	36.1	39.6	44.2	48.8	53.4	65.2	71.8	79.5	88.4	315
355	18.7	20.1	21.7	23.6	25.6	27.7	34.0	37.0	40.5	45.1	49.7	54.3	66.2	72.8	80.5	89.4	355
400	19.6	21.0	22.7	24.5	26.5	28.6	35.1	38.1	41.5	46.1	50.7	55.4	67.4	74.0	81.6	90.6	400
450	20.6	22.0	23.7	25.5	27.6	29.6	36.2	39.2	42.7	47.3	51.9	56.5	68.6	75.3	82.9	91.8	450
500	21.6	23.1	24.7	26.5	28.6	30.6	37.4	40.4	43.8	48.4	53.0	57.7	69.9	76.5	84.2	93.1	500
560	22.9	24.3	25.9	27.8	29.8	31.8	38.7	41.7	45.2	49.8	54.4	59.0	71.4	78.1	85.7	94.7	560
630	-	25.7	27.3	29.2	31.2	33.3	40.4	43.4	46.8	51.4	56.0	60.7	73.2	79.9	87.5	96.4	630
710	-	-	29.0	30.8	32.9	34.9	42.2	45.2	48.7	53.3	57.9	62.5	75.3	81.9	89.5	98.5	710
800	-	-	-	32.7	34.7	36.7	44.3	47.3	50.7	55.4	60.0	64.6	77.6	84.2	91.8	100.8	800
900	-	-	-	-	36.7	38.8	46.6	49.6	53.0	57.7	62.3	67.3	80.1	86.7	94.4	103.3	900
1,000	-	-	-	-	-	40.8	48.9	51.9	55.4	60.0	64.6	69.2	82.7	89.3	96.9	105.9	1,000
1,120	-	-	-	-	-	-	51.7	54.7	58.1	62.7	67.3	72.0	85.7	92.4	100.0	108.9	1,120
1,250	-	-	-	-	-	-	-	57.7	61.1	65.7	70.3	75.0	89.0	95.7	103.3	112.3	1,250
1,400	-	-	-	-	-	-	-	-	64.6	69.2	73.8	78.4	92.9	99.5	107.2	116.1	1,400
1,600	-	-	-	-	-	-	-	-	-	73.8	78.4	83.0	98.0	104.6	112.3	121.2	1,600
1,800	-	-	-	-	-	-	-	-	-	-	83.0	87.6	103.1	109.7	117.4	126.3	1,800
2,000	-	-	-	-	-	-	-	-	-	-	-	92.3	108.2	114.8	122.5	131.4	2,000
2,240	-	-	-	-	-	-	-	-		-	-	-	114.3	120.9	128.6	137.5	2,240
2,500	-	-	-	-	-	-	-	-	-	-	-	-	-	127.6	135.2	144.1	2,500
2,800	-	-	-	-	-	-	-	-	-	-	-	-	-	-	142.9	151.8	2,800
3,150	-	-	-	-	-	-	-	-	-	-	-	-	-	-	-	160.7	3,150

This datasheet is to be used as a tool for selecting the correct fixing materials only. Although Walraven does everything possible to ensure the accuracy of all data within this sheet, we cannot be held responsible for information supplied by third parties, i.e. standardisation institutes and pipe manufacturers.

Information: Air Ducts (Insulated)

Declaration of weight in kg/m

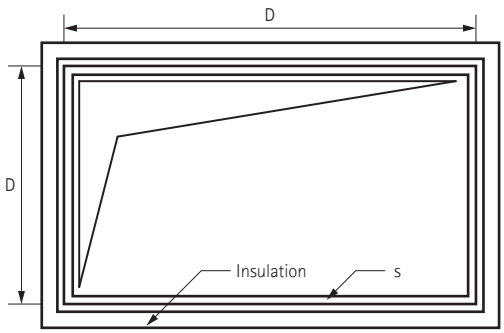

D	s = 0.75 mm			s = 0.88 mm						D
(mm)	200	224	250	280	315	355	400	450	500	(mm)
200	9.2	9.9	10.3	12.2	13.1	14.0	15.1	16.3	17.6	200
224	-	10.4	10.8	12.8	13.6	14.6	15.7	16.9	18.1	224
250	-	-	11.4	13.4	14.3	15.3	16.3	17.6	18.8	250
280	-	-	-	14.2	15.0	16.0	17.1	18.3	19.5	280
315	-	-	-	-	15.9	16.8	17.9	19.1	20.4	315
355	-	-	-	-	-	17.8	18.9	20.1	21.3	355
400	-	-	-	-	-	-	20.0	21.2	22.4	400
450	-	-	-	-	-	-	-	22.4	23.7	450
500	-	-	-	-	-	-	-	-	24.9	500

Values for the calculation:
Density air duct: Steel plate zp. = 7,850 kg/m³
Density insulation: Mineral wool = approx. 80 kg/m³

Weights for flanges and duct bracing were estimated.

D	s = 1.0 mm						s = 1.13 mm						s = 1.25 mm				D
(mm)	560	630	710	800	900	1,000	1,120	1,250	1,400	1,600	1,800	2,000	2,240	2,500	2,800	3,150	(mm)
200	20.9	22.8	24.9	27.3	30.0	32.7	39.4	43.2	47.7	53.5	59.4	65.3	78.4	86.7	96.2	107.4	200
224	21.5	23.4	25.6	28.0	30.6	33.3	40.1	43.9	48.4	54.3	60.1	66.0	79.1	87.4	97.0	108.2	224
250	22.2	24.1	26.2	28.7	31.3	34.0	40.9	44.7	49.1	55.0	60.9	66.8	80.0	88.3	97.8	109.0	250
280	23.0	24.9	27.1	29.5	32.1	34.8	41.8	45.6	50.0	55.9	61.8	67.7	80.9	89.2	98.8	110.0	280
315	24.0	25.8	28.0	30.4	33.1	35.8	42.8	46.6	51.0	56.9	62.8	68.7	82.0	90.3	99.9	111.1	315
355	25.0	26.9	29.1	31.4	34.2	36.8	44.0	47.8	52.2	58.1	64.0	69.9	83.3	91.6	101.2	112.4	355
400	26.2	28.1	30.3	32.7	35.4	38.0	45.3	49.1	53.5	59.4	65.3	71.2	84.8	93.1	102.6	113.8	400
450	27.6	29.5	31.6	34.0	36.7	39.4	46.8	50.6	55.0	60.9	66.8	72.7	86.4	94.7	104.2	115.4	450
500	28.9	30.8	33.0	35.4	38.0	40.7	48.2	52.1	56.5	62.4	68.3	74.2	88.0	96.2	105.8	117.0	500
560	30.5	32.4	34.6	37.0	39.7	42.3	50.0	53.8	58.3	64.2	70.0	75.9	89.9	98.2	107.7	118.9	560
630	-	34.3	36.4	38.9	41.5	44.2	52.1	55.9	60.3	66.2	72.1	78.0	92.1	100.4	110.0	121.1	630
710	-	-	38.6	41.0	43.7	46.4	54.4	58.3	62.7	68.6	74.5	80.4	94.7	103.0	112.5	123.7	710
800	-	-	-	43.4	46.1	48.8	57.1	60.9	65.3	71.2	77.1	83.0	97.5	105.8	115.4	126.6	800
900	-	-	-	-	48.8	51.5	60.0	63.9	68.3	74.2	80.1	86.0	100.7	109.0	118.6	129.8	900
1,000	-	-	-	-	-	54.1	63.0	66.8	71.2	77.1	83.0	88.9	103.9	112.2	121.8	132.9	1,000
1,120	-	-	-	-	-	-	66.5	70.3	74.8	80.7	86.5	92.4	107.7	116.0	125.6	136.8	1,120
1,250	-	-	-	-	-	-	-	74.2	78.6	84.5	90.4	96.3	111.9	120.2	129.8	140.9	1,250
1,400	-	-	-	-	-	-	-	-	83.0	88.9	94.8	100.7	116.7	125.0	134.5	145.7	1,400
1,600	-	-	-	-	-	-	-	-	-	94.8	100.7	106.6	123.1	131.4	140.9	152.1	1,600
1,800	-	-	-	-	-	-	-	-	-	-	106.6	112.5	129.4	137.7	147.3	158.5	1,800
2,000	-	-	-	-	-	-	-	-	-	-	-	118.4	135.8	144.1	153.7	164.9	2,000
2,240	-	-	-	-	-	-	-	-	-	-	-	-	143.5	151.8	161.4	172.5	2,240
2,500	-	-	-	-	-	-	-	-	-	-	-	-	-	160.1	169.6	180.8	2,500
2,800	-	-	-	-	-	-	-	-	-	-	-	-	-	-	179.2	190.4	2,800
3,150	-	-	-	-	-	-	-	-	-	-	-	-	-	-	-	201.6	3,150

This datasheet is to be used as a tool for selecting the correct fixing materials only. Although Walraven does everything possible to ensure the accuracy of all data within this sheet, we cannot be held responsible for information supplied by third parties, i.e. standardisation institutes and pipe manufacturers.

EN-SG 02/2022- Subject to modifications

Information: Material Properties Plastics

ABS – Acrilonitrile-Butadiene-Styrene

Temperature-resistance:
Permanently up to 70 °C, briefly up to 85 °C and to about minus 40 °C*.
Resistant to:
Formic acid, citric acid, lactic acid.
Conditionally resistant to:
Hydrochloric acid, sulphuric acid.
Not resistant to:
Acetone, petrol, benzene, solvents for paints and lacquers, butyric acid, chlorine, acetic acid, nitric acid.

PA – PolyAmide (Nylon)

Temperature-resistance:
Permanently up to about 90 °C, briefly up to about 130 °C and to about minus 40 °C*.
Resistant to:
Petrol, benzene, diesel oil, acetone, solvents for paints and lacquers, oils and greases.
Low tendency to stress cracking.
Not resistant to:
Bleach, most acids, chlorine.

PA-GV – Polyamide, fibreglass reinforced

Temperature-resistance:
Permanently up to about 100-110 °C, briefly up to 160 °C and to about minus 40 °C*.
Resistant to:
Petrol, benzene, diesel oil, acetone, solvents for paints and lacquers, oils and greases.
Low tendency to stress cracking.
Not resistant to:
Bleach, most acids, chlorine.

PE – PolyEthylene

Temperature-resistance:
Hard types permanently up to about 90 °C, briefly up to about 105 °C soft types permanently up to about 80 °C, briefly up to about 100 °C and to about minus 40 °C*.
Resistant to:
Alkalis and inorganic acids.
Conditionally resistant to:
Acetone, organic acids, petrol, benzene, diesel oil, most oils.
Not resistant to:
Chlorine, hydrocarbons, oxidising acids.

POM – PolyOxyMethylene

(polyacetal, polyformaldehyde)
Temperature-resistance:
Permanently up to about 100 °C, briefly up to about 130 °C and to minus 40 °C*.
Resistant to:
Acetone, ether, petrol, weak acetic acid, benzene, heating oil, oils and greases, toluene.
Not resistant to:
Methylene chloride, trichloroethylene, hydrochloric acid, nitric acid, sulphuric acid.

PP – PolyPropylene

Temperature-resistance:
Permanently about 90 °C, briefly up to about 110 °C and to about minus 30 °C*.
Resistance to chemicals generally as for polyethylene.

PS – PolyStyrene

Temperature-resistance:
Because of its relatively high sensitivity to the effects of chemicals, its use is not recommended at temperatures above normal room temperature, about 25 °C.
Resistance to cold: to about minus 40 °C*.
Resistant to:
Alkalis, most acids, alcohol.
Conditionally resistant to:
Oils and greases.
Not resistant to:
Butyric acid, concentrated nitric acid, concentrated acetic acid, acetone, ether, petrol and benzene, solvents for paints and lacquers, chlorine, diesel fuel.

PVC (hard) – PolyVinylChloride (hard)

Temperature-resistance:
Permanently up to about 65 °C, briefly up to about 75 °C and to about minus 30 °C*.
Resistant to:
Weak acids, alkalis, oils and greases, petrol.
Not resistant to:
Strong acids, benzene, acetone, iodine, toluene, trichloroethylene.

*The minus values apply only for parts in the quiescent condition with no severe impact stress.

Information: Surface Treatment

To improve the corrosion resistance of steel products, Walraven uses all kinds of methods. Below you will find an overview:

BIS UltraProtect® 1000 system

The BIS UltraProtect® 1000 system is the ideal and most durable solution for securing or supporting mechanical installations, solar systems and many other types of installations. The products in the BIS UltraProtect® 1000 system have very high corrosion resistance and can be applied in C1-C4 environments. BIS UltraProtect® 1000 products effortlessly withstand a salt spray test of at least 1,000 hours* (in accordance with ISO 9227).
Although the system utilizes a relatively thin protective coating, the corrosion resistance is high. Not only does the BIS UltraProtect® 1000 system offer a smooth and fine finish, the products are also visually appealing. An additional benefit of the relatively thin protective coating is that threaded products are also well protected against corrosion.
The BIS UltraProtect® 1000 products, including threaded items such as bolts, nuts and threaded rods, have superior corrosion resistance.**

Zinc plating (blue)

The protective coating is applied in an electrolytic process after cleaning, degreasing and pickling. The thickness of the layer of zinc is between 5 and 15 µm and is determined by the current intensity and the duration of the galvanizing process. After the galvanizing process the products are passivated to extend the protection period.

Pre-galvanizing

Pre-galvanizing is a continuous thermal galvanizing process applied before material treatment in manufacturing processes. The strip steel is guided through a bath containing liquid zinc after having been cleaned, degreased and pickled. The thickness of the layer of zinc is between 20 and 25 µm. Later the steel is cut to the required width. The sides of this cut material are not galvanized. This is also the case with any holes that may be drilled in the pre-galvanized material. The sides of material thinner than 1,5 mm are protected somewhat by the zinc layer on the top and bottom by the electrolytic process of 'pulling together'.

This surface protection is suitable for threaded products, which are to be used indoors or in a non-corrosive environment.

Hot dip galvanizing

The products to be treated are cleaned, degreased and pickled and subsequently put into an immersion bath of liquid zinc. The immersion bath has a temperature of 550 °C. In this process an alloy of zinc/iron develops on the surface and is then covered by a layer of pure zinc.

The thickness of the zinc layer varies between 50 and 100 µm. In consequence the process is less suitable for products with threaded holes or rods. Hot dip galvanized products are suitable for indoor as well as outdoor use and also for damp and light-corrosive environments.

The application for hot dip galvanizing processes is limited to the heavy systems.

Stainless steel 316 (1.4401) and 316L (1.4404)

Stainless steel 316 is one of the best corrosion resistant types of stainless steel. It offers a superior corrosion resistance in many corrosive environments. The protective layer is damaged by treatments such as punching, drilling and welding. That is why, after the last treatment, all stainless steel products receive an extra treatment which pickles and passivates to restore the protective layer. Products from stainless steel 316 can be applied in aggressive situations such as a sea climate and industry.

Powder coating

A protective layer of epoxy powder in any specified color is baked onto pre-treated products. The pre-treatment may differ per product and per application. In marine environment, the most durable solution is the combination of BIS UltraProtect® 1000 combined with powder coating.

The combined treatment reaches well over 1,000 hours in salt spray test without any signs of red rust.

* Until the occurrence of maximum 5% red rust.

** The warranty conditions are applicable for C1-C4 corrosive environments according to ISO 12944-2. See our website walraven.com for further information.

EN-SG 02/2022- Subject to modifications

Information: Surface Treatment (cont.)

Delta-Tone 9000

Delta-Tone 9000 consists of zinc and aluminium particles that are held together by an inorganic binder. This offers an effective protection against corrosion even with a limited thickness of the coating. Delta-Tone 9000 is applied in an immersion/centrifugal or spray process and then dried at a temperature of 200 °C. With this method an even layer is formed over the whole product with a thickness of 10 – 12 µm. Subsequently Delta-Tone 9000 forms a connection with the metal underneath.

In contrast to electrolytic and thermal galvanizing, with Delta-Tone 9000 there is no danger of hydrogen embrittlement in materials with an increased carbon content, such as spring steel. To improve the corrosion resistance, the process can be repeated which increases the thickness each time by 10 - 12 µm.

Products protected by Delta-Tone 9000 are suitable for outdoor use as well as moderate corrosive environments.

	Thickness protection layer (µm)	Hours until 5% red rust*
Surface treatment		
BIS UltraProtect® 1000	- **	1,000
Zinc plating (blue)	5 - 10	72
Pre-galvanizing	20 - 25	150
Hot dip galvanizing	50 - 80	300 - 600
Powder coating	100	1,000
Delta-Tone 9000	10 - 12	480

* *Until the occurrence of maximum 5% red rust.*

** *Method and thickness protection layer differ per product.*

Walraven products are not treated with surface treatments containing Chromium 6.

Salt-spray test

To compare the protection duration of various surface treatments, a salt-spray test is carried out according to ISO 9227. In this test products are placed in a closed cabinet and sprayed with a salt solution. The products will start to corrode. The point at which 'white' and then 'red' rust appears is noted down.

This test does not give a perfect protection duration (this depends on the surroundings in which the product is applied), but does offer a comparative view of the various surface treatments.

Information: Thermal Expansion

ABS – Acrilonitrile-Butadiene-Styrene

Temperature-resistance:
Permanently up to 70 °C, briefly up to 85 °C and to about minus 40 °C*.
Resistant to:
Formic acid, citric acid, lactic acid.
Conditionally resistant to:
Hydrochloric acid, sulphuric acid.
Not resistant to:
Acetone, petrol, benzene, solvents for paints and lacquers, butyric acid, chlorine, acetic acid, nitric acid.

PA – PolyAmide (Nylon)

Temperature-resistance:
Permanently up to about 90 °C, briefly up to about 130 °C and to about minus 40 °C*.
Resistant to:
Petrol, benzene, diesel oil, acetone, solvents for paints and lacquers, oils and greases.
Low tendency to stress cracking.
Not resistant to:
Bleach, most acids, chlorine.

PA-GV – Polyamide, fibreglass reinforced

Temperature-resistance:
Permanently up to about 100-110 °C, briefly up to 160 °C and to about minus 40 °C*.
Resistant to:
Petrol, benzene, diesel oil, acetone, solvents for paints and lacquers, oils and greases.
Low tendency to stress cracking.
Not resistant to:
Bleach, most acids, chlorine.

PE – PolyEthylene

Temperature-resistance:
Hard types permanently up to about 90 °C, briefly up to about 105 °C soft types permanently up to about 80 °C, briefly up to about 100 °C and to about minus 40 °C*.
Resistant to:
Alkalis and inorganic acids.
Conditionally resistant to:
Acetone, organic acids, petrol, benzene, diesel oil, most oils.
Not resistant to:
Chlorine, hydrocarbons, oxidising acids.

POM – PolyOxyMethylene

(polyacetal, polyformaldehyde)
Temperature-resistance:
Permanently up to about 100 °C, briefly up to about 130 °C and to minus 40 °C*.
Resistant to:
Acetone, ether, petrol, weak acetic acid, benzene, heating oil, oils and greases, toluene.
Not resistant to:
Methylene chloride, trichloroethylene, hydrochloric acid, nitric acid, sulphuric acid.

PP – PolyPropylene

Temperature-resistance:
Permanently about 90 °C, briefly up to about 110 °C and to about minus 30 °C*.
Resistance to chemicals generally as for polyethylene.

PS – PolyStyrene

Temperature-resistance:
Because of its relatively high sensitivity to the effects of chemicals, its use is not recommended at temperatures above normal room temperature, about 25 °C.
Resistance to cold: to about minus 40 °C*.
Resistant to:
Alkalis, most acids, alcohol.
Conditionally resistant to:
Oils and greases.
Not resistant to:
Butyric acid, concentrated nitric acid, concentrated acetic acid, acetone, ether, petrol and benzene, solvents for paints and lacquers, chlorine, diesel fuel.

PVC (hard) – PolyVinylChloride (hard)

Temperature-resistance:
Permanently up to about 65 °C, briefly up to about 75 °C and to about minus 30 °C*.
Resistant to:
Weak acids, alkalis, oils and greases, petrol.
Not resistant to:
Strong acids, benzene, acetone, iodine, toluene, trichloroethylene.

*The minus values apply only for parts in the quiescent condition with no severe impact stress.

EN-SG 02/2022- Subject to modifications

Part number Index (000 - 091)

0200002	584	0830012	377	0853012	97	08541110	78	0860017	56
0200004	584	0830017	377	0853015	97	0854300	83	0860021	56
0200006	584	0830117	377	0853018	97	0854301	86	0860027	56
0200008	584	0831012	377	0853022	97	0854307	90	0861017	56
0200021	587	0831017	377	0853025	97	0854308	90	0861021	56
0200024	587	0831026	377	0853028	97	0854313	88	0861027	56
0200032	584	0832019	378	0853032	97	0854316	87	0861033	56
0200040	584	0832714	378	0853035	97	0854325	87	0861043	56
0200101	587	0832719	378	0853042	97	0854332	89	0861048	56
0200102	587	0832728	378	0853115	95	0854338	92	0861061	56
0200103	587	0833012	522	0853118	95	0854356	84	0900401	372
0200104	587	0833015	379	0853120	95	0854358	84	0900402	372
0200105	587	0833017	522	0853122	95	0854359	84	0900403	372
0200106	587	0833026	522	0853125	95	0854510	85	0900406	371
0200112	587	0833915	379	0853128	95	0854612	82	0901290	370
0200300	585	0834117	381	0853132	95	0854615	82	0901300	370
0200310	586	0835000	412	0853140	95	0854618	82	0901370	370
0634000	607	0835001	413	0853150	95	0854622	82	0903200	370
0634001	607	0835002	415	0853208	98	0854628	82	0903290	370
0634009	607	0835006	414	0853210	98	0854631	82	0903370	370
0634533	608	0835012	380	0853212	98	0854635	82	0905178	370
0805108	57	0835017	380	0853215	98	0854638	82	0905200	370
0805110	57	0835026	380	0853218	98	0854642	82	0905250	370
0805112	57	0835503	410	0853222	98	0854650	82	0905290	370
0805115	57	0838000	383	0853228	98	0854654	82	0905360	370
0805116	57	0838001	383	0853615	94	0855000	83	0905430	370
0805118	57	0839018	382	0853618	94	0855006	90	0907240	370
0805120	57	0840051	39	0853622	94	0855010	80	0907450	370
0805122	57	0840052	39	0853626	94	0855012	80	0907540	370
0805125	57	0840204	38	0853632	94	0855015	80	0907750	370
0805126	57	0840254	38	0853640	94	0855018	80	0908780	370
0805132	57	0840304	38	0853648	94	0855022	80	0909010	366
0805140	57	0845205	40	0853715	93	0855028	80	0909011	366
0805150	57	0845255	40	0853722	93	0855031	80	0909060	367
0811032	62	0845304	40	0853728	93	0855035	80	0909061	367
0811040	62	0845408	40	0853735	93	0855038	80	0909100	368
0811050	62	0845506	40	0853750	93	0855042	80	0909101	368
0811056	62	0846205	40	0854000	83	0855050	80	0909120	368
0811063	62	08505216	99	0854006	90	0855054	80	0909121	368
0811070	62	08505220	99	0854007	90	0855063	80	0909150	368
0811075	62	08505225	99	0854010	77	0855812	81	0909151	368
0811080	62	08506120	99	0854012	77	0855815	81	0909200	368
0811090	62	08511018	96	0854015	77	0855818	81	0909201	368
0811100	62	08511022	96	0854015S	79	0855822	81	0909211	368
0811110	62	08511028	96	0854018	77	0855828	81	0909250	368
0811125	62	08511035	96	0854022	77	0855831	81	0909251	368
0811140	62	08511040	96	0854028	77	08580602	374	0909920	369
0811160	62	08511050	96	0854031	77	08580702	374	0910013	439
0811180	62	0852013	590	0854035	77	08580802	374	0910015	439
0811200	62	0852050	590	0854038	77	08580902	374	0910017	439
0814025	63	0852080	590	0854042	77	08581002	374	0912022	440
0828012	59	0852213	590	0854050	77	08590602	373	0912025	440
0828015	59	0852250	590	0854054	77	08590702	373	0912027	440
0828022	59	0852280	590	0854063	77	08590802	373	0912030	440
0828028	59	0853008	97	08541075	78	08590902	373	0913032	440
0828035	59	0853010	97	08541090	78	08591002	373	0917015	575

Part number Index (091 – 320)

0917017	575	2015021	275	3008023	42	31085064	17	3127210	518
09409005	464	2015027	275	3008028	42	31085070	17	3127219	518
09481101	458	2015033	275	3008035	42	31085079	17	3127225	518
09481102	458	2015042	275	3008039	42	31085083	17	3127250	518
09481103	458	2015048	275	3008045	42	31085091	17	31285014	18
09481105	458	2015060	275	3008052	42	31085097	17	31285019	18
09481201	458	2025004	276	3008058	42	31085105	17	31285023	18
09481202	458	2025006	276	3008064	42	31085115	17	31285028	18
09481203	458	2025008	276	3008070	42	31085130	17	31285035	18
09481205	458	2025010	276	3008079	42	31085140	17	31285039	18
09482261	459	2025012	276	3008083	42	31085160	17	31285045	18
09482262	459	2025014	276	3008091	42	31085169	17	31285052	18
09482265	459	2025016	276	3008105	42	3117015	518	31285058	18
09482281	459	2025018	276	3008115	42	3117018	518	31285064	18
09482282	459	2025020	276	3008130	42	3117023	518	31285070	18
09482283	459	2025022	276	3008140	42	3117029	518	31285079	18
09482285	459	2025024	276	3008160	42	3117035	518	31285083	18
09486201	460	2025026	276	3008169	42	3117043	518	31285091	18
09486202	460	2055007	277	3008180	42	3117049	518	31285097	18
09486203	460	2055008	277	3008200	42	3117056	518	31285105	18
09489000	462	2055009	277	3008210	42	3117063	518	31285115	18
09489001	462	2055010	277	3008225	42	3117067	518	31285130	18
09489115	461	2055012	277	3017017	519	3117076	518	31285140	18
09489215	461	2055013	277	3017022	519	3117091	518	31285160	18
09489300	463	2055014	277	3017030	519	3117106	518	31285169	18
1481000	101	2055016	277	3017034	519	3117116	518	31285180	18
1481010	101	2055020	277	3017042	519	31185014	16	31285200	18
1487000	523	2055022	277	3017051	519	31185019	16	31285210	18
1487010	523	2055023	277	3017060	519	31185023	16	31285225	18
2005012	280	2055024	277	3017076	519	31185028	16	3173075	36
2005014	280	2055025	277	3017089	519	31185035	16	3173078	36
2005016	280	2055026	277	3017118	519	31185039	16	3173085	36
2005018	280	2105090	279	3027068	519	31185045	16	3173116	36
2005022	280	2105110	279	3027076	519	31185052	16	3173132	36
2005026	280	2105140	279	3027085	519	31185058	16	3173141	36
2005030	280	2105160	279	3027089	519	31185064	16	3173168	36
2005040	280	2105200	279	3027105	519	31185070	16	3173219	36
2005050	280	2105225	279	3027111	519	31185079	16	3188016	33
2005055	280	2105250	279	3027118	519	31185083	16	3188020	33
2005060	280	2105315	279	3027127	519	3127018	518	3188025	33
2005070	280	2181111	609	3027134	519	3127023	518	3188032	33
2005075	280	2622010	108	3027144	519	3127029	518	3188040	33
2005085	280	2622015	108	3027155	519	3127035	518	3188050	33
2005090	280	2622020	108	3027162	519	3127043	518	3188056	33
2005095	280	2622025	108	3027169	519	3127049	518	3188058	33
2005100	280	2622032	108	3027200	519	3127056	518	3188063	33
2005105	280	2622040	108	3027219	519	3127063	518	3188075	33
2005110	280	2622050	108	31085014	17	3127067	518	3188078	33
2005120	280	2622065	109	31085019	17	3127076	518	3188090	33
2005130	280	2622070	109	31085023	17	3127085	518	3188110	33
2005140	280	2622080	109	31085028	17	3127091	518	3188125	33
2005150	280	2622100	109	31085035	17	3127106	518	3188135	33
2005170	280	2622125	109	31085039	17	3127116	518	3188160	33
2005200	280	2622150	109	31085045	17	3127132	518	3188200	33
2005225	280	3008014	42	31085052	17	3127141	518	3205015	53
2005250	280	3008019	42	31085058	17	3127168	518	3205022	53

EN-SG 02/2022- Subject to modifications

Part number Index (320 - 336)

3205028	53	33038071	45	33078019	47	33148109	25	33178227	27
3205033	53	33048078	45	33078023	47	33148116	25	33178250	27
3211015	29	33048085	45	33078030	47	33148133	25	33178275	27
3211022	29	33048092	45	33078036	47	33148140	25	33178325	27
3215015	29	33048106	45	33078042	47	33148169	25	33178364	27
3215017	29	33048116	45	33078045	47	33148188	25	33178408	27
3215021	29	33048123	45	33078052	47	33148204	25	33178458	27
3215027	29	33048133	45	33078058	47	33148213	25	33178509	27
3215033	29	33048140	45	33078065	47	33148227	25	33335014	23
3225015	100	33048154	45	33078071	47	33168169	26	33335019	23
3225022	100	33048169	45	33078078	47	33168188	26	33335024	23
33025014	43	33048183	45	33078085	47	33168204	26	33335030	23
33025019	43	33048202	45	33078092	47	33168213	26	33335037	23
33025024	43	33048219	45	33078106	47	33168227	26	33335046	23
33025030	43	33048227	45	33078116	47	33168250	26	33335052	23
33025037	43	33068169	46	33078133	47	33168275	26	33335061	23
33025046	43	33068183	46	33078140	47	33168325	26	33335067	23
33025052	43	33068202	46	33078154	47	33168364	26	33435014	24
33025061	43	33068227	46	33078183	47	33168408	26	33435019	24
33025067	43	33068241	46	33078202	47	33168458	26	33435024	24
33035014	44	33068254	46	33078219	47	33168509	26	33435030	24
33035019	44	33068264	46	33078227	47	33177078	520	33435037	24
33035024	44	33068279	46	33078254	47	33177085	520	33435046	24
33035030	44	33068289	46	33078279	47	33177092	520	33435052	24
33035037	44	33068302	46	33078289	47	33177109	520	33435061	24
33035046	44	33068325	46	33078325	47	33177116	520	33435067	24
33035052	44	33068360	46	33078360	47	33177133	520	33435074	24
33035061	44	33068374	46	33078408	47	33177140	520	33435081	24
33035067	44	33068389	46	33078436	47	33177169	520	33435087	24
33035074	44	33068408	46	33078458	47	33177188	520	33435095	24
33035081	44	33068418	46	33078509	47	33177204	520	33435103	24
33035087	44	33068436	46	33078564	47	33177213	520	33435112	24
33035095	44	33068458	46	33088169	49	33177227	520	33435118	24
33035103	44	33068509	46	33088183	49	33177250	520	33435127	24
33035112	44	33077078	521	33088202	49	33177275	520	33435137	24
33035118	44	33077085	521	33088227	49	33177325	520	33435144	24
33035127	44	33077092	521	33088254	49	33178019	27	33435153	24
33035137	44	33077099	521	33088289	49	33178023	27	33435162	24
33035144	44	33077106	521	33088325	49	33178029	27	33435172	24
33035153	44	33077116	521	33088360	49	33178035	27	33435183	24
33035162	44	33077123	521	33088408	49	33178045	27	33435194	24
33035172	44	33077133	521	33088458	49	33178051	27	33435205	24
33035183	44	33077140	521	33088509	49	33178059	27	33435216	24
33035194	44	33077149	521	33088564	49	33178064	27	33435225	24
33035205	44	33077169	521	33138019	25	33178071	27	3362018	19
33035216	44	33077183	521	33138023	25	33178078	27	3362023	19
33035225	44	33077202	521	33138029	25	33178085	27	3362028	19
33038019	45	33077219	521	33138035	25	33178092	27	3362035	19
33038023	45	33077227	521	33138045	25	33178109	27	3362043	19
33038030	45	33077241	521	33138051	25	33178116	27	3362051	19
33038036	45	33077250	521	33138059	25	33178133	27	3362054	19
33038042	45	33077264	521	33138064	25	33178140	27	3362062	19
33038045	45	33077275	521	33148071	25	33178169	27	3363014	19
33038052	45	33077289	521	33148078	25	33178188	27	3363018	19
33038058	45	33077325	521	33148085	25	33178204	27	3363023	19
33038065	45	33077341	521	33148092	25	33178213	27	3363028	19

Part number Index (336 – 438)

3363035	19	3396052	20	3403125	13	3861033	55	4323080	34
3363043	19	3396058	20	3403141	13	3861043	55	4323100	34
3363051	19	3396064	20	3404018	14	3861061	55	4323125	34
3363054	19	3396070	20	3404023	14	3862040	55	4323150	34
3363062	19	3396079	20	3404028	14	3862050	55	4323200	34
3363070	35	3396083	20	3404035	14	3862070	55	4337040	65
3363075	35	3396091	20	3404043	14	3862100	55	4337050	65
3363080	35	3396105	20	3404053	14	3943227	588	4337056	65
3363090	35	3396115	20	3404063	14	3944001	588	4337063	65
3363100	35	3396130	20	3404080	15	3944002	588	4337075	65
3363125	35	3396140	20	3404091	15	3944007	588	4337090	65
3363137	35	3396160	20	3404114	15	3944021	588	4337110	65
3363150	35	3396169	20	3404141	15	3944027	588	4337125	65
3363200	35	3396180	20	3404168	15	4001080	67	4337160	65
3373018	11	3396200	20	3408050	37	4031100	68	4337200	65
3373023	11	3396210	20	3408070	37	4125006	126	4337250	65
3373028	11	3396225	20	3408075	37	4125007	126	4337315	65
3373035	11	33965014	21	3408090	37	4125008	126	4343025	64
3373043	11	33965019	21	3408100	37	4125009	114	4343032	64
3373051	11	33965023	21	3408125	37	4125010	115	4343040	64
3373056	11	33965028	21	3408137	37	4125020	127	4343050	64
3373063	11	33965035	21	3408150	37	4137080	526	4343056	64
3374018	11	33965039	21	3408200	37	4137100	526	4343063	64
3374023	11	33965045	21	3413014	12	4137125	526	4343075	64
3374028	11	33965052	21	3413018	12	4137150	526	4343080	64
3374035	11	33965058	21	3413023	12	4137160	526	4343090	64
3374043	11	33965064	21	3413028	12	4137200	526	4343100	64
3374051	11	33965070	21	3413035	12	4137225	526	4343110	64
3374056	11	33965079	21	3413039	12	4137250	526	4343125	64
3374063	11	33965083	21	3413043	12	4137300	526	4343160	64
3385012	28	33965091	21	3413045	12	4137315	526	4343200	64
3385016	28	33965105	21	3413053	12	4137355	526	4343225	64
3385018	28	33965115	21	3413054	12	4137400	526	4343250	64
3385022	28	33965130	21	3413063	12	4137560	526	4343315	64
3385028	28	33965140	21	3423168	13	4137600	526	4347032	525
3385036	28	33965160	21	3423210	13	4137630	526	4347040	525
3385042	28	33965169	21	3423219	13	4157032	524	4347050	525
3385048	28	33965180	21	3483018	32	4157040	524	4347056	525
3385057	28	33965200	21	3483023	32	4157050	524	4347063	525
3385060	28	33965210	21	3483028	32	4157070	524	4347075	525
3385070	28	33965225	21	3483035	32	4157075	524	4347090	525
3385076	28	3403018	12	3483043	32	4157080	524	4347110	525
3385089	28	3403023	12	3483053	32	4157090	524	4347125	525
3385108	28	3403028	12	3505015	54	4157100	524	4347160	525
3385114	28	3403035	12	3505022	54	4157110	524	4347200	525
3393218	31	3403043	12	3505028	54	4157125	524	4383032	64
3393223	31	3403053	12	3515015	54	4157160	524	4383040	64
3393228	31	3403054	12	3515022	54	4157200	524	4383050	64
3393235	31	3403063	12	3515028	54	4200008	58	4383056	64
3396014	20	3403064	13	3535015	30	4200010	58	4383063	64
3396019	20	3403070	13	3535017	30	4200012	58	4383075	64
3396023	20	3403080	13	3535021	30	4200015	58	4383090	64
3396028	20	3403091	13	3535027	30	4200018	58	4383110	64
3396035	20	3403105	13	3535033	30	4200022	58	4383125	64
3396039	20	3403114	13	3861021	55	4200028	58	4383140	64
3396045	20	3403119	13	3861027	55	4323070	34	4383160	64

EN-SG 02/2022- Subject to modifications

Part number Index (438 - 594)

4383161	64	4620022	51	4708028	71	50425616	330	52022407	340
4383200	64	4620025	51	4708030	69	50520604	328	52022412	341
4383225	64	4620027	51	4708031	71	50520609	328	52023004	340
4383250	64	4620030	51	4718050	70	50520616	328	52023007	340
4383315	64	4620034	51	4718075	70	50520620	328	52023012	341
4387200	525	4620038	51	4718110	70	50520630	328	52090709	339
4387250	525	4620043	51	4923035	156	50521616	329	52090714	339
4387315	525	4620045	51	4923135	156	51121707	335	52090721	339
4389930	66	4620049	51	50020004	325	51121713	335	52090732	339
4443032	61	4620057	51	50020009	325	51121720	335	52091209	339
4443040	61	4620061	51	50020016	325	51122407	335	52091214	339
4443050	61	4620077	51	50020020	325	51122413	335	52091221	339
4443056	61	4620089	51	50020030	325	51122420	335	52091232	339
4443063	61	4620108	51	50020059	325	51122607	335	52323412	342
4443070	61	4620115	51	50020066	325	51122613	335	52323425	342
4443075	61	4620133	51	50020070	325	51122620	335	52350010	344
4443080	61	4620140	51	50121709	327	51123207	335	52350018	344
4443090	61	4620159	51	50121716	327	51123213	335	53122617	338
4443100	61	4620169	51	50121720	327	51123220	335	53420717	336
4443110	61	4620194	51	50121730	327	51124007	335	53420757	336
4443125	61	4620216	51	50122404	327	51124013	335	53421117	336
4443160	61	4620220	51	50122409	327	51124020	335	53920017	337
4443200	61	4620267	51	50122416	327	51420607	333	54020000	347
4448032	60	4620273	51	50122420	327	51420613	333	54420800	348
4448040	60	4620318	51	50122430	327	51420620	333	54421000	348
4448050	60	4620324	51	50122604	327	51420663	333	55020008	346
4448056	60	4621020	52	50122609	327	51520607	334	55922510	345
4448063	60	4621022	52	50122616	327	51520613	334	56020001	357
4448070	60	4621027	52	50122620	327	51520620	334	56020002	356
4448075	60	4621030	52	50122630	327	51520663	334	56030025	355
4448080	60	4621034	52	50123209	327	51520670	334	56090025	355
4448090	60	4621038	52	50123216	327	51803208	324	56091075	354
4448100	60	4621043	52	50123220	327	51803216	324	56520156	352
4448110	60	4621045	52	50123230	327	51804224	324	56521101	351
4448125	60	4621049	52	50124009	327	51805216	324	56521102	353
4448160	60	4621057	52	50124016	327	5191000	409	56521600	350
4448200	60	4621061	52	50124020	327	52020020	341	56521601	351
4503023	50	4621077	52	50124030	327	52020604	340	56521602	353
4503027	50	4621089	52	50320004	326	52020607	340	56521652	353
4503033	50	4621108	52	50320009	326	52020704	340	56522501	351
4503038	50	4621115	52	50320016	326	52020707	340	56522502	353
4503042	50	4621133	52	50320020	326	52020712	341	57020005	358
4503048	50	4621140	52	50320030	326	52020904	340	57420605	359
4503058	50	4621159	52	50320066	326	52020907	340	57420805	359
4503060	50	4621169	52	50327504	331	52020912	341	57421005	359
4503076	50	4621220	52	50327509	331	52021104	340	59131600	361
4503085	50	4621273	52	50327516	331	52021107	340	59132000	361
4503089	50	4621324	52	50327520	331	52021112	341	59132500	361
4503106	50	4708001	73	50327530	331	52021404	340	59490964	430
4503114	50	4708003	72	50327566	331	52021407	340	59490970	598
4503139	50	4708005	69	50420609	332	52021412	341	59490971	598
4503168	50	4708006	69	50420616	332	52021804	340	59490972	598
4503183	50	4708009	71	50420620	332	52021807	340	59490973	605
4503202	50	4708010	71	50420809	332	52021812	341	59490990	597
4503219	50	4708011	73	50420816	332	52022009	343	59491016	362
4620020	51	4708024	69	50425609	330	52022404	340	59491220	592

Part number Index (594 – 617)

59491624	362	6077231	399	6099980	488	61073134	497	6143816	424
59491827	592	6077238	399	6099981	488	61073224	497	6143820	424
59492000	596	6077244	399	6099982	488	6110063	501	6143825	424
59492001	595	6077720	567	6099985	489	6110092	501	6143830	424
59492002	595	6077730	567	6099986	490	6110234	501	6143835	424
59493001	593	6077745	567	6099988	490	6110263	501	6143840	424
59493002	593	6078008	400	6099989	490	6110334	501	6143860	424
59494001	594	6078010	400	6099992	487	6114031	505	6143880	424
59494002	594	6078031	287	61001005	499	6114053	505	6143891	424
59495111	601	6096300800	496	61001006	499	6114092	505	6143892	424
59495112	601	60963604	481	61001008	499	6114121	505	6143894	424
59495211	602	60963665	481	61001010	499	6114143	505	6143920	424
59495212	602	6096408	482	61001012	499	6117063	508	6143925	424
59496111	599	6096410	482	61001014	499	6117153	508	6143930	424
59496112	599	6096412	482	6100706	498	6118331	509	6143935	424
59496211	600	6097017	491	6100708	498	6118371	509	6143940	424
59496212	600	6097018	491	6100710	498	6118411	509	6143950	424
59497112	603	6097020	491	6100712	498	6118461	509	6143960	424
59497212	604	609831080	478	6101063	91	6119141	507	6143980	424
59499982	606	609831081	478	6103006	470	6119641	507	6143990	424
6003006	396	609831082	478	6103008	470	6119653	507	6144030	424
6003008	396	609831100	478	6103010	470	6119731	507	6144040	424
6003010	396	609831101	478	6103012	470	6119753	507	6144050	424
6003012	396	609831102	478	6103016	470	6123006	429	6144640	424
6003016	396	609831120	478	6103106	471	6123007	429	614581213	298
6003206	396	609831121	478	6103108	471	6123008	429	614581216	298
6003208	396	609831160	478	6103110	471	6123009	429	614581614	298
6003310	396	609832120	480	6103112	471	6123010	429	614581616	298
6003905	396	609832121	480	6103116	471	6123012	429	6147825	573
6003906	396	609832150	480	6103206	472	6123014	429	6147840	573
6003908	396	609832151	480	6103208	472	6123016	429	6147860	573
6003910	396	609832180	480	6103210	472	6123020	429	6148025	573
6003912	396	609837080	479	6103212	472	6123021	429	6148040	573
6008008	395	609837081	479	6103510	483	6127006	574	6148060	573
6008010	395	609837082	479	6103512	483	6127008	574	61480825	423
6008910	395	609837100	479	6103608	477	6127010	574	61480830	423
6015110	397	609837101	479	6103610	477	6127012	574	61480860	423
6015112	397	609837102	479	6103612	477	6127016	574	61480880	423
6015210	401	609837120	479	6103616	477	61281008	428	61481016	423
6070000	188	609837121	479	6103632	510	61281010	428	61481025	423
6070300	189	609837122	479	6103708	581	61281012	428	61481030	423
6070400	189	609837123	479	6103710	581	61281016	428	61481060	423
6071000	188	609837160	479	6103712	581	6133010	436	61481080	423
6071300	190	609871080	582	6103716	581	6133011	436	61481225	423
6071400	190	609871081	582	6103838	510	6133012	436	61481230	423
6071500	190	609871100	582	6103860	510	6133015	436	61481260	423
6071600	190	609871101	582	6103960	510	61380825	435	61481280	423
6072002	286	609871120	582	6105400	502	61380860	435	6148225	573
6073400	285	609871121	582	6105501	502	61380880	435	6148240	573
6073600	285	60990811	493	6105502	502	61381025	435	6174413	432
6073800	285	60991013	493	6105601	502	61381030	435	6174431	432
6077020	398	60991016	493	6105603	502	61381230	435	6174516	432
6077030	398	6099113	485	6107006	476	61381260	435	6174519	432
6077045	398	60991219	493	6107008	476	6141230	424	6174525	432
6077220	399	6099123	486	6107010	476	6143620	424	6174530	432
6077225	399	60991622	493	6107012	476	6143630	424	6174535	432

EN-SG 02/2022- Subject to modifications

Part number Index (617 - 650)

6174536	432	62681010	416	63079112	583	6353660	418	6458940	453
6183805	437	62681020	416	63079116	583	6353680	418	6459030	456
6183806	437	6283006	417	63081008	447	6353740	418	6459620	456
6183807	437	6283008	417	63081010	447	6353750	418	6459630	456
6183808	437	6283010	417	63081012	447	6353760	418	6459820	456
6183809	437	6283011	417	63081016	447	6353770	418	6459830	456
6183810	437	6283012	417	63082008	447	6353780	418	6463650	454
6183812	437	6283014	417	63082010	447	6353835	418	6473008	455
6185405054	438	6283018	417	63082012	447	6353850	418	6473108	455
6185505054	438	6283020	417	63082016	447	6353860	418	6473206	455
6185506044	438	6283210	417	6313602	446	6353880	418	6473207	455
6185606044	438	6283212	417	6313802	446	6353890	418	6473210	455
61863002	506	6283214	417	6313803	446	6356150	419	6473212	455
6193006	437	6287006	572	6313804	446	6356170	419	6473221	455
6193008	437	6287008	572	6313805	446	6356630	419	6473306	455
6193010	437	6287012	572	6313806	446	6356640	419	6473308	455
6213006	360	6287016	572	6313807	446	6356650	419	6473312	455
6213008	360	6293021	450	6313808	446	6356840	419	6473316	455
6213010	360	6293133	450	6313809	446	6356860	419	6473321	455
6213106	360	6293221	450	6313810	446	6373640	511	6473408	455
6213108	360	6293227	450	6313812	446	6373740	511	6473410	455
6213110	360	6293233	450	6313815	446	6373750	511	6473416	455
6213208	360	6298221	449	6313818	446	6373850	511	6473421	455
6213408	360	6298233	449	6313820	446	6390303	465	6473510	455
62230604	500	6303006	448	6317803	576	6390305	465	6473512	455
62230606	500	6303007	448	6317806	576	6390310	465	6473521	455
62230806	500	6303007F	448	6317810	576	6392308	466	6473621	455
62230808	500	6303008	448	6317815	576	6393000	468	6473721	455
62230810	500	6303010	448	63181010	445	6393210	467	6477210	580
6223808	512	6303012	448	63181020	445	6413006	452	6477308	580
6223810	512	6303014	448	6323002	446	6413008	452	6477416	580
6223812	512	6303016	448	6323003	446	6413158	451	6477421	580
6223815	512	6303020	448	6323004	446	6413258	451	6477512	580
6229903	503	6303024	448	6323005	446	6413358	451	6479421	22
6229904	504	6303206	448	6323006	446	6413458	451	6484321	455
6263606	417	6303208	448	6323007	446	6413558	451	6501646	210
6263609	417	6303210	448	6323008	446	6413658	451	6501666	210
6263612	417	6303212	448	6323009	446	6443908	394	6501686	210
6263615	417	6303216	448	6323010	446	6453016	454	65018227	207
6263805	417	6303306	448	6323012	446	6453240	454	65018242	207
6263806	417	6303308	448	6323015	446	6453625	454	65018247	207
6263807	417	6303310	448	6323016	446	6453725	454	65018327	207
6263808	417	6303312	448	6323018	446	6453830	454	65018342	207
6263809	417	6303316	448	6323020	446	6453930	454	65018347	207
6263810	417	63039108	492	6323024	446	6453940	454	65018367	207
6263812	417	63039110	492	63281010	445	6455006	457	65018387	207
6263815	417	63039112	492	63281020	445	6455008	457	65018627	207
6263816	417	63039116	492	6330018	589	6455010	457	65018640	207
6263818	417	6307006	577	6333618	513	6457240	578	65018642	207
6263820	417	6307008	577	6333625	513	6457625	578	65018647	207
6267805	572	6307010	577	6333630	513	6457830	578	65018667	207
6267808	572	6307012	577	6333640	513	6457831	579	65018687	207
6267810	572	6307016	577	6333655	513	6457930	578	6504018	364
6267812	572	6307020	577	6353625	418	6457932	579	6504020	136
6267816	572	63079108	583	6353635	418	6458240	453	6504025	136
62680820	416	63079110	583	6353650	418	6458830	453	6504026	365

Part number Index (650 – 658)

6504028	136	6505685	206	6518108	237	6523818	164	6533998	427
6504125	364	6505686	209	6518110	237	6523820	164	6535008	171
6505000	133	65058252	205	6518112	237	6523903	166	6535010	171
6505001	133	65058352	205	6518206	237	6525004	167	6535109	171
6505002	133	65058652	205	6518208	237	6525203	167	6535110	171
6505003	137	65059224	208	6518210	237	6525803	167	6535112	171
6505015	133	65059244	208	6518212	237	6525804	167	6535312	172
6505017	135	65059324	208	6518606	241	6525806	167	6537006	536
6505030	133	65059344	208	6518608	241	6527062	535	6537008	536
6505222	206	6505944050	208	6518610	241	6527084	535	6537010	536
6505224	206	6505944100	208	6518612	241	6527088	535	6537012	536
6505225	206	65059624	208	651867006	548	6527094	535	6537016	536
6505235	133	65059644	208	651867008	548	6527098	535	6537508	555
6505242	206	6507001	530	651867010	548	6527734	554	6537510	555
6505244	206	6507002	530	651867012	548	6527744	554	6537512	555
6505245	206	6507015	530	651868006	240	6527754	554	6537608	537
6505293	138	6507327	543	651868008	240	652785004	242	6537813	538
6505294	138	6507347	543	651868010	240	652785006	242	65381008	168
6505297	139	6507627	543	651868012	240	652785008	242	65381010	168
6505298	139	6507646	544	65188006	235	652785204	242	65381012	168
6505300	133	6507647	543	65188008	235	652785206	242	65381016	168
6505301	133	6511006	534	65188010	235	652785804	242	65381308	425
6505302	133	6511008	534	65188012	235	652785805	242	65381310	425
6505315	133	6511010	534	6519006	158	652785806	242	65381312	425
6505317	135	6511012	534	6519008	158	652785808	242	65381316	425
6505322	206	6513006	158	6519010	158	652785810	242	65381508	247
6505324	206	6513008	158	6519910	160	65278606	244	65381510	247
6505325	206	6513010	158	6519911	160	6527934	245	65381512	247
6505335	133	6513106	157	6519912	160	6527935	245	6543001	180
6505342	206	6513108	157	6519913	160	6527944	245	6543004	181
6505344	206	6513110	157	6520100	165	6531012	426	6547001	541
6505345	206	6513208	162	6520110	165	6533006	426	6553945	173
6505365	206	6513709	161	6520200	165	6533008	426	6566000	191
6505385	206	6515008	159	6520210	165	6533010	426	6566001	191
6505515	133	6515010	159	6523002	164	6533012	426	6566002	191
6505600	133	6515012	159	6523003	164	6533016	426	6566003	193
6505601	133	6515210	163	6523004	164	6533020	426	6566021	288
6505602	133	6517006	236	6523005	164	6533306	169	6566030	191
6505603	137	6517008	236	6523006	164	6533308	169	6566035	191
6505615	133	6517010	236	6523008	164	6533310	169	6566041	288
6505620	206	6517012	236	6523010	164	6533312	169	6566051	288
6505622	206	6517016	239	6523016	164	6533316	169	6566062	288
6505624	206	6517306	533	6523602	164	6533408	170	6566082	288
6505625	206	6517308	533	6523603	164	6533410	170	6566810	299
6505626	209	6517310	533	6523604	164	6533412	170	6566812	299
6505630	133	6517706	552	6523802	164	6533506	248	6566999	289
6505635	133	6517708	552	6523803	164	6533508	248	6568001	192
6505640	206	6517710	552	6523804	164	6533510	248	6568042	290
6505642	206	6517712	552	6523805	164	6533512	248	6571008	556
6505644	206	6517716	553	6523806	164	6533606	426	6571010	556
6505645	206	65178016	238	6523807	164	6533608	426	6571012	556
65056453	206	6518006	237	6523808	164	6533610	426	6571016	556
6505646	209	6518008	237	6523809	164	6533612	426	6571731	566
6505665	206	6518010	237	6523810	164	6533990	427	6571751	566
65056653	206	6518012	237	6523812	164	6533992	427	6583060	186
6505666	209	6518106	237	6523815	164	6533996	427	6583090	186

EN-SG 02/2022- Subject to modifications

Part number Index (658 - 671)

6583109	176	6603125	140	6607874	545	66587298	561	6661110	149
6583113	176	6603130	140	66090110	215	66587301	562	6662810	124
6583309	177	6603215	140	6613200	143	66587361	549	6663210	122
6584001	174	6603220	140	6613235	143	66587504	564	6663410	122
6584002	174	6603225	140	6613250	144	665875400	546	6663412	122
6584003	174	6603230	140	6613300	145	66587711	565	6663416	122
6584011	174	6603240	140	6613820	151	66587718	551	6667410	528
6584051	175	6603245	140	6617210	532	66587721	565	6667813	529
6584052	175	6603250	140	6621083	225	66587814	550	6668310	121
6584053	175	6603335	141	6623326	147	66588009	249	6668312	121
6584090	182	6603355	141	6627220	539	66588010	249	6668316	121
6584091	182	66036805	140	6628220	146	66588012	249	6668612	123
6584150	183	66036820	140	6628230	146	66588016	249	6668813	123
6584151	183	66036825	140	66288530	224	66588121	261	6693008	106
6584152	183	66036835	140	66513108	233	66588141	261	6693020	107
6584153	183	66036840	140	66513110	233	66588201	251	6693100	110
6584156	183	66036850	140	66513112	233	66588207	251	6693808	111
6584202	363	66036860	140	66513116	234	66588221	251	6693820	112
6584203	363	66036875	140	66513121	234	66588228	251	6697005	105
6584204	363	6603715	140	665175108	547	66588242	256	6697206	527
6584205	363	6603720	140	665175110	547	66588256	256	6698013	119
6585003	187	6603725	140	66518308	232	66588270	257	6698030	113
6585011	185	66038020	227	66518310	232	66588291	253	6698035	113
6585014	185	6603828	212	66518312	232	66588292	266	6698204	116
6585090	178	6603829	212	665185106	231	66588294	266	6698206	117
6585135	178	6603831	211	665185108	231	66588295	266	6698208	118
6587011	542	6603832	211	665185110	231	66588296	266	6703006	384
6587090	540	6603833	211	665185112	231	66588298	266	6703008	384
6587135	540	6603834	211	66519910	267	66588299	266	6703009	384
6591090	179	6603861	211	665285006	243	66588301	263	6703010	384
6593010	148	6603862	211	66530005	246	66588361	218	6703016	384
65938020	226	6603863	211	66530805	246	66588502	264	6703021	384
6594000	268	6603864	211	6653310	120	66588504	264	6707006	568
6594001	269	6603865	211	66580312	259	665885102	250	6707008	568
6594005	269	6603866	211	66581711	281	665885184	258	6707010	568
6594010	271	6603867	211	66581721	281	665885186	258	6708008	388
6594015	271	6603870	211	66581821	254	665885202	250	6708010	388
6594020	272	6603871	211	66581822	254	665885203	250	6709021	385
6594025	270	6603873	211	66581823	254	665885213	262	6713008	387
6594030	274	6603883	213	66583602	228	665885223	262	6713010	387
6594031	274	6603884	213	66583736	284	665885235	255	6713012	387
6594032	274	6603885	213	66583741	282	665885330	255	6713016	387
6594035	273	6603886	213	66583761	283	665885400	216	6713021	387
6601894	214	6603923	211	66583801	222	665885402	265	6717008	568
6601911	142	6603926	211	66583802	222	665885404	265	6717010	568
6601912	142	6603928	211	66583804	217	665885405	265	6717012	569
6601913	142	6607120	531	66583810	221	665885406	265	6717016	569
6601914	142	6607230	531	66587121	563	665885408	265	6717021	569
6601915	142	6607250	531	66587141	563	665885421	260	6719012	389
6603010	150	6607861	545	66587201	558	66588641	219	6719016	389
6603015	140	6607862	545	66587221	558	66588682	219	6719021	389
6603019	140	6607863	545	66587228	558	66588814	220	6719027	389
6603030	140	6607864	545	66587256	559	66588818	223	6719033	389
6603050	140	6607865	545	66587291	557	66597914	560	67198016	386
6603115	140	6607870	545	66587292	561	66598914	252	67198021	386
6603120	140	6607873	545	66587294	561	66598918	252	67198033	386

Part number Index (672 – 999)

6723006	391	6785801	402	69520821	495
6723008	391	6787001	571	69521021	495
6723010	391	6788008	407	69521026	495
6723108	391	6793008	152	69521216	495
6723110	391	6793810	408	69521221	495
6727008	570	6803008	420	69521226	495
6743001	392	6803010	420	69521621	495
6743002	392	6803012	420	69521626	495
6748055	393	6803706	421	7904035	317
6748065	393	6803708	421	7904040	317
6748085	393	6804030	422	7904045	317
6748105	393	6804825	422	7904050	317
6748150	393	6813650	433	7904150	317
67685001	302	6813830	434		
67685101	302	6813850	433		
67685130	308	6900000	589		
67685201	304	6901745	155		
67685301	302	6901752	155		
67685302	304	6901860	230		
67685310	305	6901945	229		
67685401	303	6901960	229		
67685403	311	6902106	473		
67685405	311	6902108	473		
67685410	315	6902110	473		
67685411	315	6902112	473		
67685414	306	6902116	473		
67685501	307	6902206	474		
67685502	307	6902208	474		
67685532	309	6902210	474		
67685534	310	6902306	475		
67687250	316	6902308	475		
67687400	316	6902310	475		
67687601	316	6902511	484		
67690060	313	6920012	405		
67690080	313	6920013	406		
67690100	313	6920017	405		
67690130	313	6920050	411		
67691050	312	6923230	153		
67691080	312	6923235	154		
67691100	312	6923240	153		
67691120	312	6923245	154		
67692100	312	6923250	153		
67695010	312	6930001	591		
67695015	312	6940006	444		
67695100	312	6940008	444		
67696100	312	6941030	441		
67698100	312	6941040	441		
67699000	314	6941050	441		
6781013	349	6942030	443		
6781106	349	6942040	443		
6781108	349	6951010	494		
6781110	349	6951012	494		
6785001	403	69520611	495		
6785008	403	69520616	495		
6785010	403	69520621	495		
6785101	404	69520816	495		

EN-SG 02/2022- Subject to modifications

Type Index (0 - 9 / A - K)

1

1000 35
101 55
115 56
130 308
1301 (SSt) 518
1501 25, 26, 27

2

200 107, 109
2000 12, 13
2000S 14, 15
2S 44
23, 24, 43

3

300 (SSt) 519
3000 62
320 53
321 29
322 100
335 304, 307
338 28
394 588

4

40 105
400 67, 68
4000 60, 61
413 526
415 60, 61
415 (SSt) 524
420 58
432 34
434 64
434 (SSt) 525
480 302

5

500 49
45, 46, 47
500 (VdS) 50
5000 32, 33
5055 377

6

600 395, 396
609 510
612 428, 429
612 (SSt) 574
614 423, 424
614 (SSt) 573
622 512, 513
628 416, 417
628 (SSt) 572
630 449, 450
446, 447, 448
630 (SSt) 577
635 418
637 511
641 451
645 453, 454
645 (SSt) 578
647 455
647 (SSt) 580
650 (Strut) 206, 208, 209
650 (Strut-hdg) 207, 210
650 (WM - SSt) 530
650 (WM - Strut) 543, 544
650 (WM) 133, 135, 137
651 157, 158, 159
651 (SSt) 533
652 164, 166
652 (SSt) 535
653 171, 172, 248
168, 169, 170
425, 426
653 (SSt) 536, 538
660 (Strut - hdg) 214
660 (Strut - SSt) 545
660 (Strut) 211, 213
660 (WM - SSt) 531
660 (WM) 140, 141
670 384, 385
670 (SSt) 568, 569
671 387, 389
671 (SSt) 568, 569
672 391
672 (SSt) 570
674 392
675 387, 389
678 403, 404, 571
681 433, 434

8

80 106, 108
828 59
840 38
855 378

A

ABC 357
ACC 350, 351
ACHW 355
ACHZ 355
ACN 352
ACO 353
ACS 356
ACT 354
ARAYPLAST 509
ARAYTUB 99

B

BIS CP 508
BIS Gold 501
BRC45 173

C

clamp 11, 24, 25
CP 508
CS P1 609

D

DS 5 205

F

FC 325
FC-HR 329
FC-ICC 327
FC-ICT 332
FC-M6x9 328
FC-PD 331
FC-R 330
FC-TB 326
Flash 11
FU-ICC 335
FU-M6 333
FU-M6x9 334

G

G2 33, 42, 231
16, 17, 18
242, 243, 250
255, 258, 260
GAM8 339
GOLD 501

H

HDS41x21 285
HK 497
HMW 360
HW 360

I

IKS-2000® 587
584, 585, 586

K

KA8 591
KAL 591
KSB1 19
KSB2 20, 21

Type Index (L – Z)

L

LDS WM0 189
LDS WM1 190
LY 361

P

PC 340, 341
PCD 342
PCF 343
PCM 344
PEX bend kit 598
PHV 358
PHV-ICT 359
Pipe Clamp 275, 276, 277
Pipe clamps 11, 12, 25
Pipe Clip 275, 276, 277

R

rail 133, 530
RapidStrut 543
RD 347
RD-ICT 348
RTB 349

S

SB 336
SB-CT 337
SB-ICCS 338
service deck 308
SL 37
SLK 366, 367, 368
starquick 77, 78, 80 81
Strut connector 250, 255, 258
Stub out 598
Stubout 598
SX 36

T

Tiger 324
TR-C 345
TR-M 346
TWIST 507

W

WBA 476
WCA 481
WDI1 470, 473, 581
WDI1L 471
WDI1R 472, 475, 474
WHA1H 480
WM0 133, 135
WM1 133, 135, 530
WM15 133, 135, 530
WM2 133, 135, 530
WM30 133, 135
WM35 133, 135
WNH 360
WPSF100 485
WSA1 477
WTB1 478, 582
WTB7 479
WVSF200 486

X

XL 505

EN-SG 02/2022- Subject to modifications

Alphabetical Index (Aaa – But)

1

135° Connector 256, 559

2

2D Connector 252
2S-Clamps 43, 44
2S-Clamps with Lining 23, 24

3

3D Connector, BIS PushStrut 274

4

434 Lining 66
45° Connector 257

A

Acoustic Ceiling Fixings Britclips® 350, 351, 352 353, 356
adjustable connector 306
Adjustable Foot 221
Adjustable Support 551
Adjustable Support, BUP1000 223
Adjustable Support, SSt 551
Aluminium Suspension Band (Curved) 381
Anchor Ring 468
angle adjustability 306
Angle Bracket Strus, SSt 559
Angle Brackets 251, 252, 559
Angle Brackets Strut, BUP1000 227, 256, 257
Angle Formed Slide Nuts WM1-35 161
Angle Support 225
Arayclip (GAM8) 339
ARAYPLAST Plugs 509
ARAYTUB Clamps 99

B

Backplate Assembly 392, 393
Ball Swivel Hanger Sets BIS RapidRail® WM0-30 165
Ball Swivel Hanger Sets BIS RapidStrut® 246
Ballast Block, BIS Yeti® 303
base plate 216, 217, 218 219, 546, 549
Base Plates 670, SSt 568, 569
Base Plates 670, zp 384, 385
Base Plates 671, heavy, SSt 568, 569
Base Plates 671, heavy, zp 387, 389
Base Plates 672, with Welding Bolt, SSt 570
Base Plates 672, with Welding Bolt, zp 391
Base Plates 675, Heavy, zp 387, 389
Base Plates, BUP1000 386, 388
Basefix 371
Basket Retainer Clip, BIS RapidRail® 173
Beam Clamp 287
Beam Clamps Model C 395, 396
Beam Clamps Model O 398, 399, 567
Beam Clamps Strut, hdg 281, 282, 283 284, 286
Beam Clamps Strut, SSt 565, 566
Beam Clamps WM0-35, zp 185, 188
Beam Clamps WM1-2, SSt 542
Beam Clamps WM1-30, zp 186
Beam Clamps WM3 187
Bifix G2 16, 17, 18 33, 42
Bifix® 1301, SSt 518
Bifix® 300, SSt 519
Bifix® 415, SSt 524
Bifix® 5000 G2, BUP1000 33
Bifix® G2, BUP1000 16, 17, 18 42
BIS HK 497
BIS Yeti® 335 H-Set 305
BISMAT® 1000 35
BISMAT® 2000 12, 13
BISMAT® 2000 'S' 14, 15
BISMAT® 5000 32
BISMAT® Flash 11
BISMAT® Rail 410, 411, 412 413, 414, 415
BISMAT® SL-Guidance Clamps 37
BISMAT® SX-Socket Clamps 36
Blowpump, WIS 489
Bolt Set, Maxx 298
Bracket 251, 256, 257 559
Brass Anchor, WBA 476
Brass Clamps 59
Britclips® AC Acoustic Ceiling Fixings 350, 351, 352 353
Britclips® FC Flange clips 324, 325, 326 327, 328, 329 330, 331, 332
Britclips® FU Under Flange Clips 333, 334, 335
Britclips® GAM8 339
Britclips® PC 340, 341
Britclips® PC Push-on Clips 340, 341, 342 343
Britclips® PCM 344
Britclips® PH Vertical Flange Clips 358, 359
Britclips® RD Roof Deck Hangers 347, 348
Britclips® RTB Rapid Deck Suspension Hangers 349
Britclips® SB Screw-on Beam Clamps 336, 337, 338
Britclips® T Bar Angle Brackets 357
BRITCLIPS® Tiger 324
Britclips® TR Threaded Rod Clips 345, 346
Britclips® Wedge Nuts 360
Brush, WIS 488
Button, BIS PushStrut 267

C

Alphabetical Index (Cab – CP)

Cable Bind System BIS STARLOCK 366, 367, 368 369
Cable Ties 370
Cablefix, BIS Fixing Rail 365
Cantilever Arms BIS RapidStrut®, hdg 214
Cantilever Arms Strut, BUP1000 211, 212, 213
Cantilever Arms Strut, hdg 214
Cantilever Arms Strut, SSt 545
Cantilever Arms WM, BUP1000 140, 141
Cantilever Arms WM, SSt 531
Cantilever Arms WM0 140
Cantilever Arms WM1 140
Cantilever Arms WM15 140
Cantilever Arms WM2 140
Cantilever Arms WM3 141
Cantilever Arms WM30 140
Cantilever Arms WM35 140
Cantilever Bracket 150
Capping, Strut 289
Cast Suspension Eyes, Zamak 421
Cast-in Pipe Clamps 590
Catenary Wire Cutter 464
C-Beam Clamps 395, 396
Ceiling Anchor, WCA 481
Ceiling Anchor, WCA1 496
Ceiling Flange 273
Chains (DIN 5685), SSt 575
Chains (DIN 5685), zp 439
Chains, Victor (DIN 5686), zp 440
Chemical Anchor WPSF100, WIS 485
Chemical Anchor WVSF200, WIS 486
Chipboard Screws 438
Clamping bracket 287
Clamping Plates 171, 172, 249 538
Clamping Set 287
Clamps 338 28
Clamps BIS 2S (with Lining) 23, 24
Clamps BIS 2S (without Lining) 43, 44
Clamps BIS 3000, zp 62
Clamps BIS 4000, BUP1000 60
Clamps BIS 4000, zp 61
Clamps BIS Bifix® 1301, SSt 518
Clamps BIS Bifix® 300, SSt 519
Clamps BIS Bifix® 415, SSt 524
Clamps BIS Bifix® 5000 G2, BUP1000 33
Clamps BIS Bifix® G2, BUP1000 16, 17, 18 42
Clamps BIS KSB1 19
Clamps BIS KSB2 20, 21
Clamps BISMAT® 2000 12, 13
Clamps BISMAT® 2000 'S' 14, 15
Clamps BISMAT® 5000 32
Clamps BISMAT® Flash 11
Clamps for Corrugated Sheets 409
Clamps for Guidance BISMAT® SL 37
Clamps for PE-Pipe 434, SSt 525
Clamps for PE-Pipe 434, zp 64
Clamps for Plasitic Pipe BIS Bifix® 5000 G2, BUP1000 33
Clamps for Plastic Pipe BIS 3000, zp 62
Clamps for plastic pipe BIS 4000, BUP1000 60
Clamps for plastic pipe BIS 4000, zp 61
Clamps for Plastic Pipe BISMAT® 5000 32
Clamps for Spiral Ducts with Lining, SSt 526
Clamps for Sprinkler Pipe HD500 50
Clamps starQuick® 77, 78, 80 81, 82
Clamps Strut, pg 280
Clamps type 434, SSt 525
Clamps type 434, zp 64
Clamps with Lining for Spiral Ducts, RvS 526
Clamps with Lining, Strut 279
Clamps with Silicone Rubber BISMAT 2000 'S' 14, 15
Clic-Clamps 77, 78, 80 81, 82
Closed Saddle 95
Cold FixPoint Clamp 527
Combibeugel 70
Combifix 93
Conduit fixings 362
Connecting Strip BIS RapidStrut® 258
Connector 90° 251
Connector 90°, BIS PushStrut 271
Connector Angle Bracket, BIS PushStrut 270
Connector Flat, BIS PushStrut 269
Connectors 135°, WM0-35 176, 178
Connectors 90°, WM0-35 174, 176, 178
Connectors 90°, WM3 177, 179
Connectors BIS RapidStrut® 250, 255, 258 260, 262
Connectors Strut 252, 253, 254 558
Connectors Strut, Flat 259
Connectors Strut, U-Shaped 563
Connectors WM3 181
Connectors WM-rail 175
Console Kit Clim Strut ISO 230
Console Kit Clim Strut ISO with Wall Rail 229
Console Kit Clim WM2 ISO 155
Console Kit Clim WM35 ISO 155
Console Kit ISO 153
Console Kit ISO with Suspension 154
Consoles 140, 211, 531 545
Construction Bracket 148, 149
Copper Saddles 58
Corner Brackets WM0-30, zp 150
Corrugated Sheets, Fixing to 409
Coverstrip Strut 289
CP Drop-in Anchors 508
CP Hammer-in Plugs 508

EN-SG 02/2022- Subject to modifications

Alphabetical Index (Cro – Foa)

Cross Channel Connector 183, 265
Cross Connector 266, 561
CS P1 PU Foam Gun 609
cube 394
CV-Clamps Duplo 53
CV-Clamps Duplo KS 100
CV-Clamps Duplo with Lining 29

D

dB-FiX® 200 Fixing Point Assembly 107, 109
dB-FiX® 200 Stand-off Fixing Kit 112
dB-FiX® 40 Noise Insulating Fixing Point 105
dB-FiX® 80 / 200 Mounting Kit 110
dB-FiX® 80 / 200 Support Plate 113
dB-FiX® 80 Fixing Point Assembly 106, 108
dB-FiX® 80 Stand-off Fixing Kit 111
Deck Suspension Hangers RTB 349
Decorative Pipe Clamps, Brass 59
děrovaný profil 139
Dispenser Gun, WIS 490
DobyGrip Lighting Kit 463
DobyGrip Lock 462
DobyGrip Loop 458
DobyGrip Snap End Hook 460
DobyGrip Stud 459
DobyGrip Wire Reel 461
Double Slide Nuts WM0-35 162
Double Wall Clamps 54
Double Wall Clamps KSB1 31
Double Wall Clamps with Lining 30
Double Wall Plates 393
Drill Bit Hollow Block, WSDS+ HB 495
Drop-in Anchor Lipped, WDI1L 471
Drop-in Anchor Short, WDI1R 472
Drop-in Anchor SSt, WDI1 581
Drop-in Anchor, WDI1 470
Drop-in Anchors BIS XL 505
DS 5 Fixing Rail, BIS RapidStrut® (BUP1000) 205
DS5 205
Duo Wall Plates starQuick® 83
Duplo Clamps 53
Duplo Clamps KSB1 31
Duplo Clamps with Lining 29
Duplo Fixing Plates 392
Duplo KS 100

E

Electrical box fixings 362
End Caps, Maxx 299
Expansion Device (BUP1000) 121
Expansion Device, SSt 528
Expansion Guide Assemblies 714 120
Expansion Guide Assembly (BUP1000) 123
Expansion Guide Assembly, SSt 529
Expansion Joint (BUP1000) 123
Expansion Joint Brackets 101, 523
Expansion Joints 714 120
Extension Pipe, WIS 487
Eye Bolts 422

F

Fastening Set for Grids 314
Fastening Set for Steps 314
Feet 305, 308
Fixeringskap 71
Fixing Accessories for Cable Tie 372
Fixing Brackets 317
Fixing Plates 384, 386, 387 388, 389, 391 568, 569, 570
Fixing Point Assembly BIS dB-FiX® 200 107
Fixing Point Assembly BIS dB-FiX® 200 Stand-off Fixing Kit 112
Fixing Point Assembly BIS dB-FiX® 80 106
Fixing Point Assembly BIS dB-FiX® 80 Stand-off Fixing Kit 111
Fixing Point Assembly Clamps Set BIS dB-FiX® 200 109
Fixing Point Assembly Clamps Set BIS dB-FiX® 80 108
Fixing Point Assembly Stand-Off Fixing Kit BIS dB-FiX® 200 110, 111
Fixing Point Sound Shield BIS dB-FiX® 40 105
Fixing Rail 136
Fixing Rail BIS L-shaped, pg 139
Fixing Rail BIS RapidRail®, pg 133, 135
Fixing Rail BIS RapidRail®, SSt 530
Fixing Rail BIS RapidStrut®, BUP1000 207
Fixing Rail BIS RapidStrut®, hdg 210
Fixing Rail BIS RapidStrut®, pg 206, 208, 209
Fixing Rail BIS RapidStrut®, SSt 543, 544
Fixing Rail BIS U-shaped, pg 138
Fixing Rail DS 5, BIS RapidStrut® (BUP1000) 205
Fixing Rail for BIS Cablefix 365
Fixing Rail for BIS Twistfix 364
Fixing Rail Strut, zp 206, 208, 209
Fixing Rail WM3 137
Fixing Set Strut 285
Fixing set WM-rail 189, 190
Fixpoint Console 'Heavy' (BUP1000) 118
Fixpoint Console 'Light' (BUP1000) 116
Fixpoint Console 'Medium' (BUP1000) 117
Fixpoint Console 'Medium' SSt 527
Flange Clips FC 325, 326, 327 328, 329, 330 331, 332
Flange Clips FU 333, 334, 335
Flange Clips Tiger 324
Flat Roof 305, 308
Flexible Angle Support 225
Flexible Prop 225
Floor Bracket Strut 228
Foam Gun CS P1 609

Alphabetical Index (Foo – Pig)

Foot 305, 308
Funderingsbeugel 69
Funderingshaak 73

G

GAM8 (Arayclip) 339
Gas Meter Holder 156
Girder Cleats 185, 186, 187 395, 396, 398 542, 567
Glider 528
gradient 306
Grating 312
Grid 312
Grid Fastening Set 314

H

Hammerfix BIS RapidRail® WM0-35, zp 164, 166
Hammerfix BIS RapidRail® WM1-2, SSt 535
Hammerfix BIS RapidStrut® 242
Hammerfix BIS Strut, SSt 554
Hammerfix U BIS RapidStrut® 243
Hammerfix 'U', BIS Strut (BUP1000) 244
Hammerfix, starQuick® 92
Hammer-in Screw starQuick® 86
Hammer-in Shoulder Studs 511
Hammer-in Studs 512
Hanger Bolts, BUP1000 416
Hanger Bolts, SSt 572
Hanger Bolts, zp 417
Heavy Duty Clamps for Sprinkler Pipe HD500 50
Heavy Duty Clamps HD500 45, 46, 47 49
Heavy Duty Clamps SSt 521
Heavy Duty Clamps with Lining HD1501 25, 26, 27
Height Adjuster 408
Hexagon Head Bolts, BUP1000 423
Hexagon Head Bolts, SSt 573
Hexagon Head Bolts, zp 424
Hexagon Nuts, BUP1000 428
Hexagon Nuts, SSt 574
Hexagon Nuts, zp 429
Hexagon Wood Bolts 437
Highload Anchor, WHA1H 480
Hight Adjustable Foot 221
Hight Adjustable Support 221
Hinged Pipe Clamps, Round 67
Hinged Pipe Clamps, Square 68
Hollow Block Drill Bit, WSDS+ HB 495
Hollow wall plug 505, 506
Hook and Eye Rope Tensioners 467
Horizontal connector 261, 563

I

IKS-2000® Mounting Band 585
IKS-2000® Text Card Holders 584
IKS-2000® Text Cards 587
IKS-2000® Velcro 586
Industrial Clamps HD1501 25, 26, 27
Industrial Clamps HD500 45, 46, 47 49
Interflange 287
Isonyl 94

K

Klemschuif 72
KSB1 Clamps 19
KSB1 Double Clamps 31
KSB2 Clamps 20, 21

L

Linear connector 261, 563
Lining for Clamp 3000 63
Lining for PE Clamp 434 66
Longitudinal connector 261, 563
L-shaped Fixing Rail, pg 139
LY-clip 361

M

Manifold Fixing 588
Maxx Bolt Set 298
Maxx End Caps 299
Metal Clamp Liners for PE Clamp 434 65
Moulding Parts Rubber 39
Mounting Angle 174, 175, 177 179, 250, 255 540
MV-LDP 302, 304, 307

N

Nail Clips (Black) 374
Nail Clips (White) 373
Nail Shoulder Studs 513
Nail-in Clamps 55
Noise Insulating Fixing Point Assembly BIS dB-FiX® 200 107, 109
Noise Insulating Fixing Point Assembly BIS dB-FiX® 80 106, 108
Noise Insulating Fixing Point BIS dB-FiX® 40 105
Nuts, starQuick® 90

P

Parallel Connectors 457
PE-clamp 434, SSt 525
PE-clamp 434, zp 65
Penetration 315
Perforated Band Plasticized 378
Perforated Band Plated 377
PEX 598
Pig Tail Chain Hooks 444

EN-SG 02/2022- Subject to modifications

Alphabetical Index (Pip – Rap)

Pipe Clips (zp) 57
Pipe Hooks 56
Pipe Identification, BIS IKS-2000® 584, 585, 586 587
pitched roof 305
Plasterboard Plug 505, 506
Plasterboard Plugs Startset 506
Plastic Mesh Sleeve, WIS 491
Plugclips 590
Plugs ARAYPLAST 509
Plugs BIS TWIST 507
Plugs CP 508
Pressure Gauges 608
Profile Clamps 185, 186, 187 281, 282, 283 284, 395, 396 398, 400, 542
Profiles (Lining for Pipe Clamp), Rubber 38
Profiles (Lining for Rail), Rubber 192
Profiles Strut, Lining for Rail 290
Profiles, Silicon 40
Prop 225
Prop WM1-2, SSt 539
Prop WM3 147
Protection Caps Strut 288
Protection Caps WM0-35 191
Protection Caps WM3 193
Punching Pins, Replacement 406
Punching Pliers 405
Push Plug, starQuick® 91
Push-fit Clamps 97
Push-fit Saddles, Double, White 98
Push-fit Saddles, Single, White 97
Push-on Clips 340, 341, 342 343
PushStrut 3D Connector 274
PushStrut Button 267
PushStrut Connector 90° 271
PushStrut Connector Angle Bracket 270
PushStrut Connector Flat 269
PushStrut T-Connector 272
PushStrut Wallplate 273
PVC Profile Strut 289

R

Rail Adapter 232, 233, 234
Rail Adaptor starQuick® 88
Rail Beam Clamps Strut 281, 282, 283 284, 565, 566
Rail Beam Clamps WM1-30, zp 186
Rail Beam Clamps WM3 187
Rail BIS RapidStrut®, BUP1000 207
Rail BIS RapidStrut®, hdg 210
Rail BIS RapidStrut®, pg 206, 208, 209
Rail BIS RapidStrut®, SSt 543, 544
Rail Clamps BIS RapidStrut® 265
Rail Clamps WM0-30 183
Rail Clip 100 96
Rail connector 541
Rail Connectors BIS RapidStrut® 250, 255, 258 260, 262
Rail Connectors Strut, BUP1000 251, 254, 256 257, 263, 264 266, 252, 253
Rail Connectors Strut, SSt 557, 558, 559 560, 561, 562 564
Rail Connectors WM0-35 174, 175, 176 178, 180, 182
Rail Connectors WM1-2, SSt 540
Rail Connectors WM3 177, 179, 181
Rail End Caps Strut 288
Rail End Caps WM0-35 191
Rail End Caps WM3 193
Rail Fixing Sets (WM-rail) 189, 190
Rail Fixing Sets, Strut 285
rail foot 216, 217, 218 219, 546, 549
Rail Junction Angle Bracket Strut, BUP1000 226
Rail Junction Angle Bracket WM0-30, zp 148
Rail Junction Angle Bracket WM1-30, hdg 149
Rail Junction Assembly WM0-35 151
Rail Node 252
Rail Props Strut, BUP1000 224
Rail Props WM0-30, zp 146
Rail Props WM1-2, SSt 539
Rail Props WM3 147
Rail starQuick® 87
Rail Suspension Bracket WM0-35 152
Rail Wall Plate WM0-35, zp 143
Rail Wall Plate WM1-2, SSt 532
Rail Wall Plate WM3 145
Rail Wall Plate, Hinged 144
Rail WM, pg 133, 135
Rail WM, SSt 530
Rail WM0 133, 135
Rail WM1 133, 135
Rail WM15 133, 135
Rail WM2 133, 135
Rail WM3 137
Rail WM30 133, 135
Rail WM35 133, 135
Rail-beam Clamps WM0-35, zp 185
Rail-beam Clamps WM1-2, SSt 542
railfoot 216, 217, 218 219, 546, 549
Rain Water Pipes 67, 68
Rapid Deck Suspension Hangers RTB 349
Rapid Sliding Wall Bracket 362
RapidRail® Ball Swivel Hanger Sets WM0-35 165
RapidRail® Basket Retainer Clip 173

Alphabetical Index (Rap – Sli)

RapidRail® Beam Clamp WM0-35, zp 185
RapidRail® Cantilever Arms, BUP1000 140
RapidRail® Cantilever Arms, SSt 531
RapidRail® Connector WM0-35 180
RapidRail® Corner Bracket WM0-30, zp 150
RapidRail® Fixing Rail, pg 133, 135
RapidRail® Fixing Rail, SSt 530
RapidRail® Hammerfix WM0-35, zp 164, 166
RapidRail® Hammerfix WM1-2, SSt 535
RapidRail® Rail Clamps WM0-30 183
RapidRail® Rail Connector, WM0-35 174, 175, 182
RapidRail® Rail End Caps WM0-35 191
RapidRail® Rail Junction Angle Bracket WM0-30, hdg 149
RapidRail® Rail Junction Angle Bracket WM0-30, zp 148
RapidRail® Rail Props WM0-30, zp 146
RapidRail® Rail Suspension Brackets WM0-35 152
RapidRail® Slide Nuts WM0-35, zp 157
RapidRail® Slide Nuts WM1-2, SSt 533
RapidRail® Wall Plate WM0-35, zp 143
RapidRail® Wall Plate WM1-2, SSt 532
RapidRail® Wall Plate, Hinged 144
RapidRail® WM, pg 133, 135
RapidRail® WM, SSt 530
RapidRail® WM3 137
RapidStrut® Ball Swivel Hangers 246
RapidStrut® Cantilever Arms, hdg 214
RapidStrut® Connectors 258
RapidStrut® Fixing Rail DS 5 (BUP1000) 205
RapidStrut® Hammerfix 242
RapidStrut® Hammerfix-U 243
RapidStrut® Rail Clamps 265
RapidStrut® Rail Connector 250, 255, 258 260, 262
RapidStrut® Rail, BUP1000 207
RapidStrut® Rail, hdg 210
RapidStrut® Rail, SSt 543, 544
RapidStrut® Rail, zp 206, 208, 209
RapidStrut® Slide Nuts 231, 232, 233 234
RapidStrut® U-Connector 260
RapidStrut® Wall Plate 217
Replacement Punching Pins 406
Rioleringsleidingen 69, 70, 71 72, 73
Rohrschellen nach DIN 3567 51, 52
Roll Expansion Devices 121, 122
Roof bushing 315
Roof Deck Hangers RD 347, 348
roof installation 305, 306
Roof Suspension Assembly 407
Roofing Sheet hangers 404, 571
Roofing Sheet hangers VdS 402, 403
Rooftop 302, 304, 305 306, 307, 308 309, 315, 316
Rooftop anchor 315
Rooftop console 315
Rooftop fixpoint 315
Rooftop Montagesysteem 309
Rope Grips and Eyelets 466
RSWB 598
Rubber Absorption Piece 126
Rubber Moulding Parts 39
Rubber Profile 192
Rubber Profile Strut 290
Rubber Profiles (Insert for Fixing Rail) 192
Rubber Profiles (Lining for Pipe Clamps) 38
RVS Clamps with Lining for Spiral Ducts 526

S

Saddles Support 143
Saddles, copper 58
Safety strap 397, 401
Schiebemutter (doppelt) 163
Screw-on Beam Clamps 336, 337, 338
Serated Washers 427
Service Deck 312, 313
Service Deck Grid, Yeti 312
Service Deck Step, Yeti 313
Setting Tool Set, WDI1R 474
Setting tool, WDI1 473
Shaft cantilever 212
Shaft installation 212
Sheet Metal Cylinder Screw 432
Shield Anchor, WSA1 477
S-Hooks, zp 441
Shoulder Studs 511
Shouldered Masonry Nail 589
Signhangers Britclips® 354, 355
Silentbloc 114, 115
Silicon Profiles 40
Single Band Clamps 338 28
Single Band Pipe Clamps 338 28
Single Screw Pipe Clamps BISMAT® 2000 12, 13
Single Screw Pipe Clamps BISMAT® 5000 32
Single Screw Pipe Clamps BISMAT® Flash 11
Single Screw Pipe Clamps KSB1 19
SL-Guidance Clamps 37
Slide Block GFRP (BUP1000) 124
Slide Nuts 651A WM0, zp 158
Slide Nuts 651C WM1-35, zp 158
Slide Nuts 651D WM3 159
Slide Nuts BIS RapidRail® WM0-35, zp 157
Slide Nuts BIS RapidRail® WM1-2, SSt 533
Slide Nuts BIS RapidStrut® 231, 232, 233 234
Slide Nuts Strut, BUP1000 235
Slide Nuts with Plastic Tabs Strut, BUP1000 240
Slide Nuts with Plastic Tabs Strut, SSt 548
Slide Nuts with Plastic Tabs Strut, zp 241
Slide Nuts with Spring Strut, hdg 237

EN-SG 02/2022- Subject to modifications

Alphabetical Index (Sli – Str)

Slide Nuts with Spring Strut, SSt 552
Slide Nuts with Spring Strut, zp 236
Slide Nuts WM1-2, SSt 534
Slider 528
slope 306
Socket 221
Socket Bolt-Wood Screws, BUP1000 416
Socket Bolt-Wood Screws, zp 417
Socket Clamps BISMAT® SX 36
Socket Head Bolts 435, 436
Socket Head Screws 435, 436
Splitted S-Hooks 443
Sprinkler Clamps HD500 50
Square Slide Nut Strut (BUP1000) 238
Square Slide Nut, SSt 553
Square Slide Nuts Strut 239, 553
Square Slide Nuts WM1-2, SSt 534
Square Slide Nuts WM1-35, zp 160
SSt Clamps for Spiral Ducts with Lining 526
SSt BIS RapidStrut® Fixing Rail 543, 544
SSt Cantilever Arms Strut 545
SSt Chains 575
SSt Clamps 434 525
SSt Clamps BIS Bifix® 1301 518
SSt Clamps BIS Bifix® 300 519
SSt Clamps BIS Bifix® 415 524
SSt Clamps with Lining 518
SSt Expansion Guide Assembly 529
SSt Fixing Rail BIS RapidRail® 530
SSt Fixing Rail BIS RapidStrut® 543, 544
SSt Hammerfix BIS RapidRail® WM1-2 535
SSt Hammerfix BIS Strut 554
SSt Hanger Bolts 572
SSt Heavy Duty Clamps 521
SSt Hexagon Head Screws 573
SSt Hexagon Nuts 574
SSt Rail Beam Clamp WM1-2 542
SSt Rail Prop WM1-2 539
SSt Rail Strut 543, 544
SSt Rail WM 530
SSt Slide Nuts WM1-2 533, 534
SSt Square Slide Nut 534, 553
SSt Strut Cantilever Arms 545
SSt Strut Rail Connector 90° 558, 560
SSt Strut Slide Nuts 552
SSt Strut Slide Nuts with Plastic Tabs 548
SSt Strut Wall Plate 549
SSt Strut Washers 555
SSt Stud Connectors 578
SSt Suspension Band 522
SSt T-Connector WM1-2 540
SSt Thread Adaptors 580
SSt Threaded Rods 577
SSt Wall Plates 532, 568, 569 570
SSt Wall Plates WM1-2 532
SSt Washers, Flat WM1-2 536
SSt Washers, U-shaped WM1-2 538
SSt Washers, U-shaped, Strut 556
Stainless 541, 546, 549
Stainless Glider 528
Stainless Slider 528
Stainless steel connector 541
Stair 313
Stair Tread 313
Stand Pipe Brackets 34
Stand Pipe Clamps BISMAT® 1000 35
Star Plugs 510
STARLOCK Cable Bind System 366, 367, 368 369
starQuick® Clamps 77, 78, 80 81, 82
starQuick® Distance Block 85
starQuick® Duo Wall Plates 83
starQuick® Fixing Nuts 90
starQuick® Hammerfix 92
starQuick® Hammer-in Screw 86
starQuick® Push Plug 91
starQuick® Rail 87
starQuick® Rail Adaptor 88
starQuick® Threaded Rod Adaptor 84
starQuick® Universal Rail Adaptor 89
Step 313
Step Fastening Set 314
Stop Drill Bit, WDI1 SD 494
Stop Drill Bit, WDI1R 475
Strut Angle Bracket, BUP1000 227, 256, 257
Strut Angle Bracket, SSt 559
Strut Beam Clamps, hdg 281, 282, 283 284
Strut Beam Clamps, SSt 565, 566
Strut Cantilever Arms, BUP1000 211, 212, 213
Strut Cantilever Arms, SSt 545
Strut Capping 289
Strut Clamps with Lining 279
Strut Clamps, BUP1000 275, 276, 277
Strut Clamps, zp 280
Strut Connector 251, 256, 257 261, 263, 557 562, 563
Strut Connectors Flat 259, 562
Strut Connectors U-Shaped 261, 563
Strut Fixing Rail DS 5 (BUP1000) 205
Strut Floor Brackets 228
Strut Hammerfix 'U' (BUP1000) 244
Strut Hammerfix, SSt 554
Strut Rail Connectors, BUP1000 251, 254, 256 257, 263, 264 266, 252, 253
Strut Rail Connectors, SSt 557, 559, 560 561, 562, 564
Strut Rail End Caps 288

Alphabetical Index (Str – U-w)

Strut Rail Junction Angle Bracket, BUP1000 226
Strut Rail Prop, BUP1000 224
Strut Rail, zp 206, 208, 209
Strut Slide Nuts with Plastic Tabs, BUP1000 240
Strut Slide Nuts with Plastic Tabs, SSt 548
Strut Slide Nuts with Plastic Tabs, zp 241
Strut Slide Nuts with Spring, hdg 237
Strut Slide Nuts with Spring, SSt 552
Strut Slide Nuts with Spring, zp 236
Strut Slide Nuts, BUP1000 235
Strut Square Slide Nut 239, 553
Strut Square Slide Nut (BUP1000) 238
Strut Square Slide Nut, SSt 553
Strut SSt Washers, U-shaped 556
Strut T-Bracket 222
Strut T-Connector 263, 562
Strut Tee-Bolt Assembly 245
Strut U-Washers 249
Strut Wall Plates 216, 217, 218 219, 546
Strut Wall Plates, Hinged 220, 550
Strut Washers Flat, BUP1000 247
Strut Washers U-Shaped 249
Strut Washers, SSt 555
Strut Z-Connector 264, 564
Stub-out clamp 598
Stub-out kit 598
Stud Bolt, SSt 576
Stud Bolt, WIS 493
Stud Bolts, BUP1000 445
Stud Bolts, zp 446
Stud Connector (Round) 456
Stud Connector, SSt 579
Stud Connectors 453, 457
Stud Connectors, SSt 578
Stud Connectors, zp 454
Support Bracket 221, 225
Support Plate, BIS dB-FiX® 80 / 200 113
Suspension Band 379
Suspension Band - Curved 380
Suspension Band (Curved) - Aluminium 381
Suspension Band Plasticized 378
Suspension Band Plated 377
Suspension Band, SSt 522
Suspension Eye, 887 421
Suspension Eyes 420
Suspension Eyes - Metric 434
Suspension Eyes - Wood Thread 433
Swivel Beam Clamps Model P 400
SX-Socket Clamps 36

T

T Bar Angle Brackets, Britclips® 357
Tacker Clamps 591
Tacker-System 591
T-Bolts WM0-35, zp 164, 166
T-Bolts WM1-2, SSt 535
T-Bracket Strut 222
T-Connector BIS RapidStrut® 262
T-Connector Strut 263, 562
T-Connector WM0-35 182
T-Connector, BIS PushStrut 272
Tee-Bolt Assembly Strut 245
Tee-Bolt Assembly WM3 167
Telescopic Screw Gun Bracket 362
Temperature Gauges 608
Test Plugs, BIS Twinlok® 607
Thread Adaptors, SSt 580
Thread Adaptors, zp 455
Threaded Distance Bars 451
Threaded Nipples 452
Threaded Rod Adaptor starQuick® 84
Threaded Rod Clips 345, 346
Threaded Rod Connector 457
Threaded Rod SSt, WIS 583
Threaded Rod Support 119
Threaded Rod, WIS 492
Threaded Rods, BUP1000 447
Threaded Rods, SSt 577
Threaded Rods, zp 448
Threaded Shoulder Wood Screws 418
Threaded Tubes 449, 450
Throughbolt Anchor SSt, WTB1 582
Throughbolt Anchor, WTB1 478
Throughbolt Anchor, WTB7 479
Tiger Flange Clips 324
Trapezium Fixings 402, 403, 404 571
Trapezoid Sheet Hangers 349, 402, 403 404, 571
Turn-out kit 598
Twinlok® Test Plugs 607
TWIST Plugs 507
Twistfix 363
Twistfix, BIS Fixing Rail 364
two-screw clamp KSB2 20, 21

U

Under Flange Clips FU 333, 334, 335
Uniblock 383
universal 394
universal cube 394
Universal Rail Adaptor, BIS starQuick® 89
Ursus Foot 316
U-shaped Cantilever Arms WM, zp 142
U-shaped Connectors, Strut 261, 563
U-shaped Fixing Rail, pg 138
U-washers WM0-35, zp 171
U-washers WM3 172

EN-SG 02/2022- Subject to modifications

Alphabetical Index (U-w - WVS)

U-washers, Strut 249

V

Ventilation Duct Connector 127
Vertical cantilever 212
Vertical Flange Clips 358, 359
Vertical welded 212
Vibration Damper 114, 115
Victor Chains (DIN 5686), zp 440

W

W Strut 1000 275
W Strut 2000 276
W Strut 5000 277
Walkway 308, 312, 313
Wall Clamps 54
Wall Clamps with Lining 30
Wall Flange 273
Wall Plates Hinged Strut 220, 550
Wall Plates Hinged WM-rail 144
Wall Plates WM0-35, zp 143
Wall Plates WM3 145
Wall Plates, BUP1000 386, 388
Wall Plates, Double 393
Wall Plates, SSt 532, 568, 569 570
Wall Plates, zp 217, 384, 385 387, 389, 391
Wallplate 216, 218, 219 546, 549
Wallplate, BIS PushStrut 273
Washers Strut U-shaped, SSt 556
Washers Strut, Flat, BUP1000 247
Washers Strut, Flat, zp 248
Washers Strut, SSt 555
Washers Strut, U-shaped 249
Washers U-shaped, WM1-2, SSt 538
Washers WM0-35, Flat, BUP1000 168
Washers WM0-35, Flat, zp 169
Washers WM0-35, U-shaped, zp 171
Washers WM1-2, Flat, SSt 536
Washers WM3, Flat 170
Washers WM3, U-shaped 172
Washers, BUP1000 425
Washers, Sst (Flat) 537
Washers, zp 426
WBA Brass Anchor 476
WCA Ceiling Anchor 481
WCA1 Ceiling Anchor 496
WCP Cavity Plug 502
WDI1 Drop-in Anchor 470
WDI1 Drop-in Anchor SSt 581
WDI1 SD Stop Drill Bit 494
WDI1 Setting tool 473
WDI1L Drop-in Anchor Lipped 471
WDI1R Drop-in Anchor Short 472
WDI1R Setting Tool Set 474
WDI1R Stop Drill Bit 475
Wedge Nuts, Britclips® 360
WEP Expansion Plug 499
WHA1H Highload Anchor 480
Wire Anchors HK / HKS 497
Wire Ropes 465
WIS Blowpump 489
WIS Brush 488
WIS Chemical Anchor WPSF100 485
WIS Chemical Anchor WVSF200 486
WIS Dispenser Gun 490
WIS Extension Pipe 487
WIS Plastic Mesh Sleeve 491
WIS Stud Bolt 493
WIS Threaded Rod 492
WIS Threaded Rod SSt 583
WM Cantilever Arms U-shaped, zp 142
WM Cantilever Arms, BUP1000 140
WM Cantilever Arms, SSt 531
WM Rail, pg 133, 135
WM Rail, SSt 530
WM0 Cantilever Arms 140
WM0 Fixing Set 'Light Duty' 189
WM0 Rail 133, 135
WM1 Cantilever Arms 140
WM1 Fixing Set 'Light Duty' 190
WM1 Rail 133, 135
WM15 Cantilever Arms 140
WM15 Rail 133, 135
WM2 Cantilever Arms 140
WM2 Rail 133, 135
WM3 Cantilever Arms 141
WM3 Rail 137
WM30 Cantilever Arms 140
WM30 Rail 133, 135
WM35 Cantilever Arms 140
WM35 Rail 133, 135
WNP Nail Plug 500
Wood Screws 437
Wood Screws 'Special' 419
WPF 501
WPF Plasterboard Fixings 501
WPSF100, WIS Chemical Anchor 485
WRX Metal Plug 503
WRX Plastic Plug 504
WSA1 Shield Anchor 477
WSDS+ HB Hollow Block Drill Bit 495
WTB1 Throughbolt Anchor 478
WTB1 Throughbolt Anchor SSt 582
WTB7 Throughbolt Anchor 479
WUP Uni Plug 498
WVSF200, WIS Chemical Anchor 486

X

Alphabetical Index (X-C – Zzz)

X-Connector 266, 561
X-connector BIS RapidStrut® 262
X-connector WM0-35 182
XL Drop-in Anchors 505

Y

Yeti Service Deck Grid 312
Yeti Service Deck Step 313
Yeti® 302, 304, 305 308, 309
Yeti® 130 Frame Set 309
Yeti® 335 Frame Set 307
Yeti® Ballast Block 303

Z

Z-connector Strut 264, 564

EN-SG 02/2022- Subject to modifications

walraven

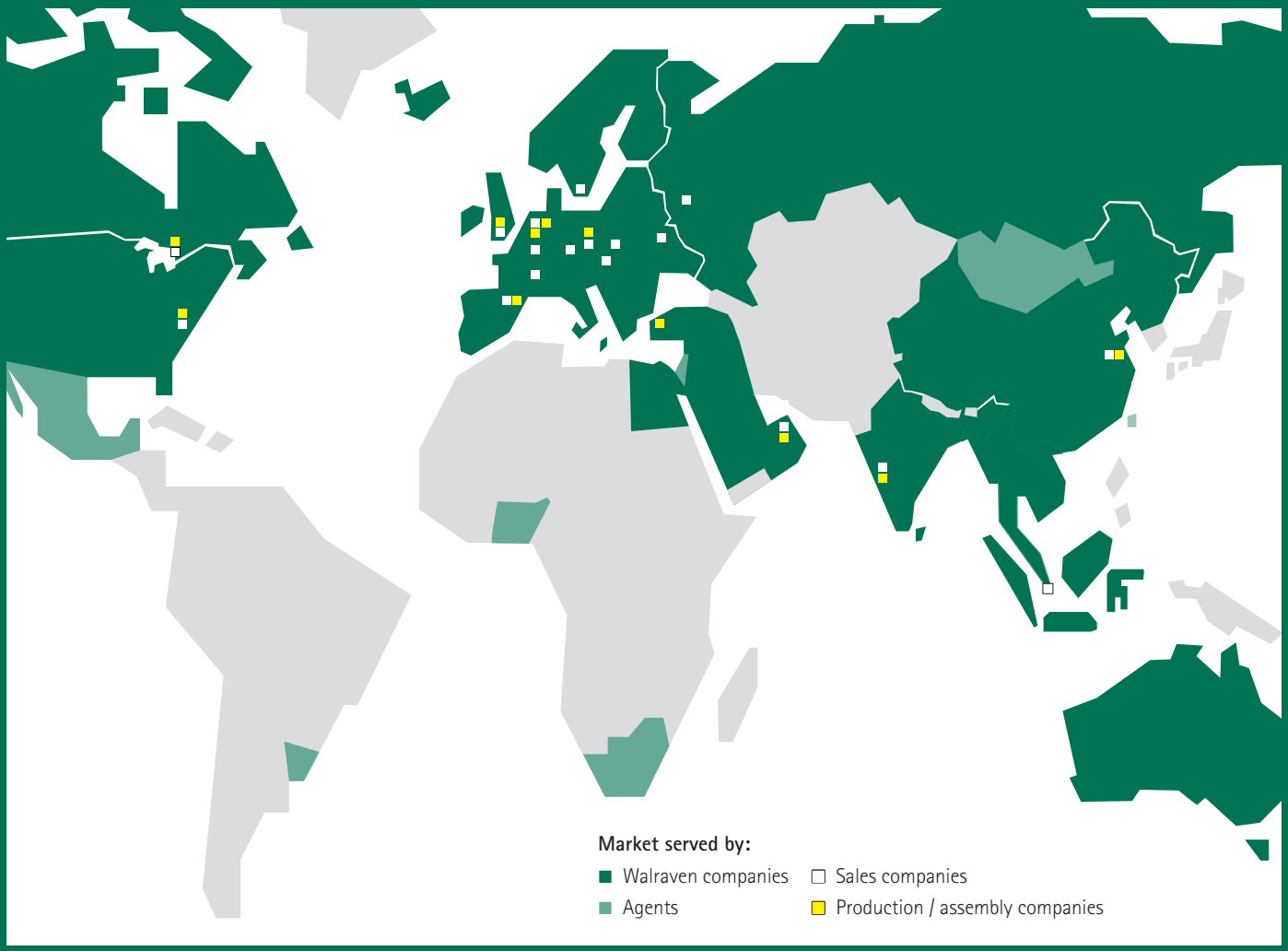

Find out how we can support you

Would you like to find out more about any of the solutions described in this brochure?
Or would you like to discuss how we could help you find the best possible solution for your project? Get in touch today!

Singapore
South East Asia & Pacific

Walraven Pte. Ltd.
71 Lorong 23 Geylang #06-14
388386 Singapore (SG)
Phone +65 6970 0605
customerservice.sg@walraven.com

Singapore
South East Asia & Pacific

Walraven Warehouse
Walraven Pte. Ltd.
WAREHOUSE, B1 Industrial
One Sims Lane # 01-08
387355 Singapore
Phone +65 6908 3885
Singapore

Walraven Group
Mijdrecht (NL) · Tienen (BE) · Bayreuth (DE) · Banbury (GB) · Malmö (SE) · Grenoble (FR) · Barcelona (ES) · Kraków (PL)
Mladá Boleslav (CZ) · Moscow (RU) · Kyiv (UA) · Danville (US) · Shanghai (CN) · Dubai (AE) · Budapest (HU) · Mumbai (IN)
Singapore (SG) · Burlington (CA)

Walraven Catalogue Electrical - (SG) - 10/2021 - pdf - Subject to modifications