walraven.com

walraven

Britclips® Tiger

The innovative clip

Multifunctional with several connection possibilities

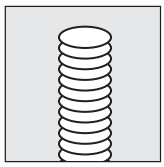

Threaded rod

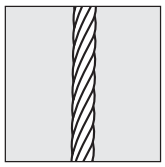

Steel cable

S-hook

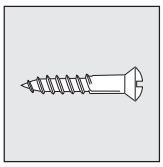

Wood screw

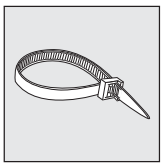

Cable tie

Britclips® Tiger

The innovative clip

Multifunctional with several connection possibilities

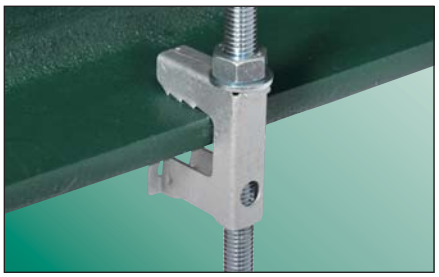

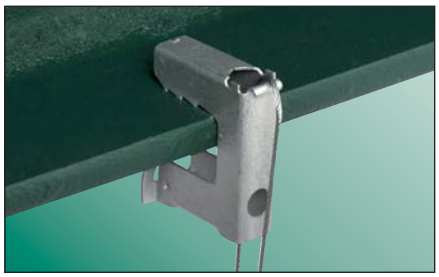

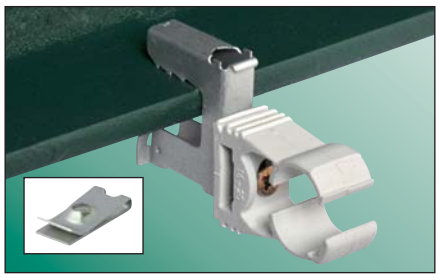

Britclips® ICP Clip included for fixings with wood screw

Britclips® Tiger + Britclips® ICP + e.g. BIS starQuick® + Wood screw =

Efficient and easy to use!

Fixing examples

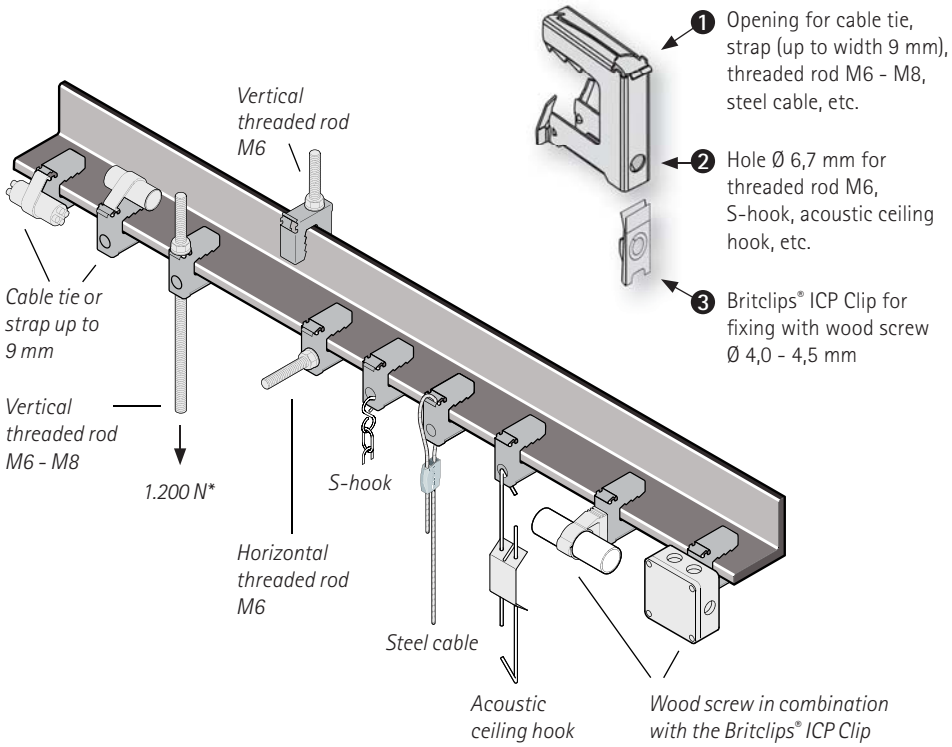

1. Opening for cable tie, strap (up to width 9 mm), threaded rod M6 - M8, steel cable, etc.
2. Hole Ø 6,7 mm for threaded rod M6, S-hook, acoustic ceiling hook, etc.
3. Britclips® ICP Clip for fixing with wood screw Ø 4,0 - 4,5 mm

CSTB le futur en construction

* Certified performance on a 6 mm girder with axial traction of a threaded rod M6: 1.200 N (safety margin 4:1) - test report CSTB – ED / 05-022.

Application

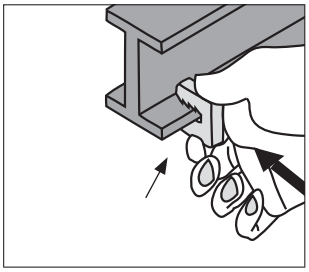

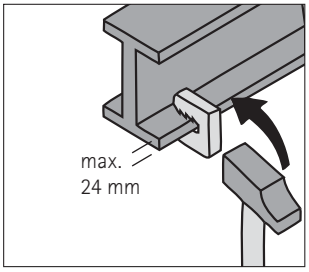

Place the Britclips® Tiger Beam Clip on the girder and tap it with a hammer or push it by hand.
For static loads, single use and non-relocatable.
Beware: not suitable for inverted use.

walraven

walraven

Britclips® Tiger

Technical characteristics

- Material: spring steel (type CS70)
- Surface treatment: Magni coated, 2 layers (600 hours resistant to salt spray), suitable for outdoor use

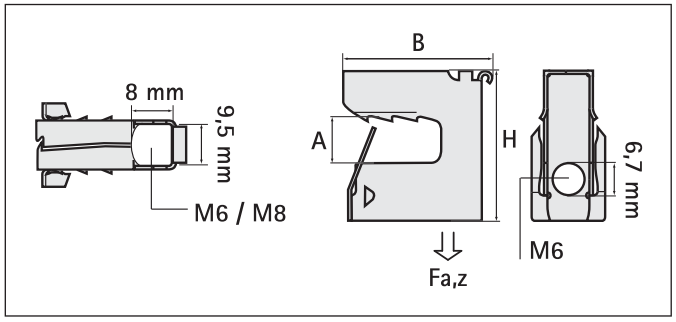

INDOOR & OUTDOOR

Part No.	Code	A (mm)	B (mm)	H (mm)	Bag	Box
EP 5180 3 208	TIGER 8	2 - 8	30	30	25	-
5180 5 208	TIGER 8	2 - 8	30	30	-	100
EP 5180 3 216	TIGER 16	8 - 16	32	38	25	-
5180 5 216	TIGER 16	8 - 16	32	38	-	100
EP 5180 2 224	TIGER 24	16 - 24	42	48	20	-
5180 4 224	TIGER 24	16 - 24	42	48	-	100
For static loads						

More Walraven solutions for your electrical installations

Britclips® Electrical Fixings

A complete range of electrical fixings for use in professional installations.

BIS starQuick® System

A self-closing clamp with an extensive range of accessories that makes the system complete.

BIS DobyGrip Wire Suspension System

The quick and efficient alternative to threaded rods and chains.

BIS RapidRail® Fixing System

Offers an unprec-edented choice for rail profiles, cantilever arms and accessories.

United Kingdom
Ireland

Walraven Ltd.
Thorpe Way, Banbury (GB)
Oxon, OX16 4UU
Tel. +44 (0)1295 75 34 00
Fax +44 (0)1295 75 34 28
sales.uk@walraven.com

Other countries

Walraven International
P.O. Box 15
3640 AA Mijdrecht (NL)
Tel. +31 (0)297 23 30 00
Fax +31 (0)297 23 30 99
export@walraven.com

Walraven Group
Mijdrecht (NL) · Tienen (BE) · Bayreuth (DE) · Banbury (GB) · Malmö (SE) · Grenoble (FR) · Barcelona (ES) · Kraków (PL)
Mladá Boleslav (CZ) · Moscow (RU) · Kyiv (UA) · Detroit (US) · Shanghai (CN) · Dubai (AE) · Budapest (HU)

walraven.com

GB: bsi. ISO 9001 Quality Management FM 34174

Britclips® Tiger (EN) - 09/2015 - 36 - Subject to modifications